BALTIMORE COUNTY, MARYLAND
Interoffice Correspondence

DATE: June 11, 2008

TO: Deputy Director Don Rascoe

FROM: Supervisor James H. Thompson

SUBJECT: An Pointin Still
2323 York Road
Tax Account No. 08-19-009700

On June 11, 2008 at approximately 12:45 p.m., I made a re-inspection of the referenced property.

I see no difference in the parking layout then from my first inspection made months ago.

You have made a statement in the past that the property owner's attorney, Lawrence E. Schmidt, commented a new parking lot layout would be completed once the lot was re-surfaced with black top. Again, I see no evidence of any black top being applied.

Lastly, the variance petition case file #02-165-A still remains in my office per your request.

Subj: **GTCC Stil Questions 3-16-07**
Date: 3/16/2007 3:41:51 PM Eastern Daylight Time
From: LeaBo
To: ballen@putuxent.com

Bob:
Brief summary of the issues and timeline:

Parcel ID -08-19-009700
Owned by: Albert P and Frieda G. Schaefer
10400 Fernwood Rd, Bethesda, MD 20817
2323 York Rd. Zoned BL (Business Local)
Size 1.78 AC ES York Rd.

History:
1. Bad Dog Stil signed a lease in April 1999 to place an Irish Pub on the property. They did not do "Due Diligence" relating to lthe space available on the 1 acre available.

2. They redid the original building inside. Two restaurants previously occupied the building; 1989 Bob's Big Boy, Marriot Corp., and Club House Diner, 1997-98.

3. The original building sq. ft was 5025 at todays regulation would require 81 parking spaces.

4. Bad Dog Stil added on the south side a "patio", on the back east end a two story storage shed, then filed with the DRC to add 594 sq ft on the north side. I attended that DRC hearing and questioned the parking problem. I was told that would be determined at the permits issue decision. The County allowed it. That addition required 119 parking spaces, which they did not have. This resulted in 7394 Sq. Ft.

5. When they first modified the space, they rounded off the north parking space area causing noncompliance with DEPREM 1988 notice that the forest area along the stream must be maintained. This was 900 sq ft which allowed 14 additional parking spaces.

6. When the 594 sq ft addition was proposed, GTCC opposed that due to less then the parking spaces available and other parking regulations.

7. October 22, 2001 Bad Dog Stil filed for Variances (7) that were in conflict with BCZR. GTCC appeared and opposed the granting of those requested. Zoning Commissioner granted all stating he determined the land to be unique and thus he could grant them in his order dated March7, 2002. Case 02-165-A

8. GTCC appealed that decision to the Board of Appeals. Peoples Council also then entered the case.

9. GTCC tried to aid Bad Dog in finding legal parking in the area for over a year and a half. The north neighbor had only 77 required spaces and could not legally serve them. Dr. Foster north on York Rd was to far and across York Rd, the south property is zoned MR and owned by UPs and they refused to allow Stil parking on their lot. November 11/27/2001 Mimiba (John Mitcherling part owner of Stil) purchase 3 Thelma St. house for the purpose of his son living there and working at the Stil.
That lasted about 3 months and they tore the house down and attempted to use the lot for employee and customer parking. GTCC opposed that use of DR 3.5 residential property for commercial parking.

10. Mimiba LLC then filed for relief with the Zonining Office. The Deputy Zoning Commissioner, Tim Krotoco, denied that use. They then appealed to the Board of Appeals. Case 02-533-SPHA.

11. Both cases were many times postponed. Finally, In July 2, 2004 the Board of Appeals denied the original petitioner's request for variance. The case 03-C-04-7824 came before the Circuit Court May 18,

2005. Peoples Counsel and Louis W. Miller, as an individual citizen, and current President of Greater Timonium Community Council, Inc. gave testimony against the Petitioner's request for variance.

12. The Circuit Court's order dated July 13, 2005 denied the Petitoner's requests.

13. GTCC waited until November 2005 to determine action by BadDog Stil or Baltimore County to enforce that order. Email, letters, discussion with Stil owner,
phone calls to Director of Permits and Development, Code Enforcement have produced no result to this date.

14 The Petitioner attempted to get approval from DRC, GTCC appeared and opposed that approval. It was denied and told they had a Permits & Development problem to apply the order.

15. That is where this case stands today March 16, 2007. WOW!

OK BOB THAT'S A BRIEF HISTORY

Lou

AOL now offers free email to everyone. Find out more about what's free from AOL at **AOL.com**.

FYI

Zoning Review comments, 1/17/07, REVISED 1/22/07 after on-site review
The Still, 2323 York Rd. Eng.contacted this date by phone. See*
8th ED
Redlined parking plan date: 10/17/06

The staff has reviewed the plan for basic compliance with the current parking regulations as specified in Section 409 of the Baltimore County Zoning Regulations. Certain changes are necessary to the plan for continued review; these are as follows:

1) Confirm by plan note that the liquor license on site is a Class B license and the use is that of a Restaurant, Standard as defined in Section 101 BCZR. If this is not correct, confirm the classification and use. Be aware that a Class D license requires 20 parking spaces for each 1,000 sq. feet of gross floor area, as does a nightclub. All parking calculations must be shown based on the Floor Area, Gross definition. See Sections 409 and 101 BCZR. Remove the internal screened use areas shown in the building. Note the number of floors/basement areas with square footages and use areas. Staff has made building measurements from the plan and it appears that the building size has a 6,600 sq. ft. gross floor area, not 6,392 sq. ft. Adjust plan and all calculations and notes accordingly.

2) Remove the patio designation from the plan. Note clearly that there is no seating, customer service or amenities provided in this area. Clarify the use under the overhang area and limit per the above patio comment. Failure to do so requires the inclusion of the areas for parking support in the calculations. * THE PATIO CANNOT BE ENCLOSED

3) Dimension aisle widths, typical parking space dimensions and traffic direction arrows. Note that all paving is durable and dustless (state type) and permanently striped. 4 spaces on and adjacent to Parcel 15 must meet the minimum parking space dimension and permission to park partially on this offsite parcel must be documented.

4) Label all previously existing vs. proposed parking areas.

5) Note the use of the 2 small remaining sheds. If these are for site maintenance equipment only, and are not occupied by any employees, they may remain uncounted for parking requirements. Clearly state compliance with this use limitation on the plan or provide parking support.

6) Note that: A landscape plan must be approved for this parking plan.

7) Compact spaces may only be counted if they are shown to be surplus to the minimum parking requirement. Staff counts 5 compact spaces on the plan while 3 are shown in the calculations. Please clarify/correct.

8) Provide a highlighted revised and dated plan with a copy of these comments to Zoning Review for further comment.

John Lewis, Planner II, Zoning Review

GREATER TIMONIUM COMMUNITY COUNCIL, INC.
C/O 44 E. TIMONIUM RD.
TIMONIUM, Md. 21093

EXH. 14

3RD OF 2ND PAGE

April 24, 2006

Mr. Timothy M. Kotroco
Director of Permits & Development Management
County Office Building, Suite 105
111 West Chesapeake Avenue
Towson, Maryland 21204

Dear Tim,

Thank you for the opportunity to express our ongoing concerns and disappointment related to the 'Stil' Case in which the GTCC, on behalf of our (51) represented Community Associations, prevailed in a zoning hearing concerning infractions that continue to remain in place at their business location in spite of the fact that they lost the original case and subsequent appeal. As you are aware, GTCC has spent countless time, money and energy in trying to protect the integrity of our community areas, especially along the York Road corridor, by insisting that everyone adhere to the zoning regulations which have been established by Baltimore County. Everyone, including 'The Stil' is subject to these regulations and all we want is to see that each facet of the hearing order is complied with as soon as possible. It's long overdue! In particular, please find some of our thoughts which are as follows:

1. Bad Dog ('Stil') lost their case at the Circuit Court, thus all variances granted by Commissioner Schmidt are null and void. The additions to the original building created their problem along with no "due diligence" upon signing their lease.

2. Since the Circuit Court decision was rendered in July 2005, Bad Dog has made no effort to comply with the regulations. **Bad Dog should immediately be fined for non-compliance and continue until this issue is completed.**

3. We request that GTCC, Inc. member(s) participate in any future negotiations about compliance. Additionally, we would request minutes taken of any prior meetings you have had on this subject with their engineer and lawyer.

4. A revised parking lot configuration should immediately be prepared to comply with the County regulations. When that parking lot plan is provided, reviewed, and in compliance with County regulations then decisions relating to the building(s) and service area must be done.

GTCC, Inc. et al have spent over four years of effort and costs to protect the area from those who decide to ignore the regulations. Only when Bad Dog decided to further expand the north side of the original building by 594 square feet did all of the other issues arise. When they appeared before the Development Review Committee of June 11, 2001, I was recognized by Don Roscoe and asked the question, "How do they propose to satisfy the parking regulation?" Lawyer Vernon Boozer stated they would lease the old gas station on the south side. I stated that lot was full of cars and would not be available. This began the problem for Bad Dog and the 'Stil'.

Their infringement into the stream forest buffer of approximately 900 sq. feet provided them with additional land for parking in avoiding DEPRM regulations. Agreement was subsequently made allowing that infringement.

The use of smaller parking spaces, parking 6" to the building, squeezing spaces where aisles should be, no islands provided, and not sufficient spaces to satisfy the building areas were all non-compliance with Baltimore County regulations, without itemizing the actions on this case further as they appear in the transcript as in the testimony at each venue.

An additional important issue is Bad Dog ('Stil') knew they were violating the regulations and attempted to satisfy only the number of spaces problem. Their attempt to produce letters with the funeral home on the north side, discussions with UPS on the south side, and even purchase of 3 Thelma St. and later a letter agreement with Nationwide Auto Lot on York Road at York and Thelma St. for so called employee parking. (You, as Deputy Zoning Commissioner, granted auto use with eleven restrictions on that lot)

Finally, you asked our opinion on whether any particular aspect of that operation is offensive to the community. In a reply from an Officer of GTCC Inc. to that question he said, "Yea...how about simple compliance with the regulations to start. Also, how about compliance?"

Representing the nearby Communities, **yes they are affected**. Especially West Timonium Heights Community, the businesses across the street, Gibby's, Bank, Liquor Store, Thelma Street, Rose Street. Etc. All are affected by the parking of customers of the 'Stil'. (Documentation can be furnished to substantiate this comment)

Tim, this is just a case of the Community, the County, and your Offices to now cause compliance with the regulations.

In summary, GTCC, Inc. appreciates your attention to this important matter and continued support in trying to insure complete compliance with all County Zoning Codes & Regulations, especially those that were a direct result of the decisions and rulings rendered by the Zoning Commissioner, Board of Appeals, and Baltimore County Circuit Court in this matter.

Sincerely,

/S/

Louis W. Miller, Past President
GTCC, Inc.
Leabo@aol.com
410-252-3444

cc: Eric Rockel, President, GTCC, Inc. 2006
Frank Regan, Treasurer, GTCC, Inc. 2006

File: GTCC 'STIL' 4-24-06 Rev3.doc

APPEAL

HEARING ~~THURSDAY 12-27-01 9AM RM 407~~
~~MON 1-7-02 10AM RM 407~~ PP
~~WED 1-30-02 11AM RM 407~~ PP
~~THUR 2-14-02 11AM RM 407~~
WED 2-20-02 2PM RM 407

ASE # 02-165 Item # 165
A

CERTIFICATE OF POSTING

1) Posted _____ Hearing Date _____
2) Posted _____ Hearing Date _____

ADS JEFF 1-15
1) Paper/Date _____ Enc ____
Paper/Date _____ Enc ____

2) Paper/Date _____ Enc ____
Paper/Date _____ Enc ____

P&A FEES
1) _____
2) _____

COMMENTS
Planning ✓ Fire ✓ Traffic ✓
Critical Area ____ SHA ✓ EPA ✓
Health: ____

Associate JNP

Zoning Violation # _____

Prior Hearing(s) _____ _____

MAP NW 14 A
S. D. 8th
DATE
200 RDP
1000
DP

167 pages scanned

02-165-A

2020165 "A" APPEAL
supplemented

Maryland Department of Assessments and Taxation
BALTIMORE COUNTY
Real Property Data Search (2007 vw1.1)

Go Back
View Map
New Search

Account Identifier: **District -** 08 **Account Number -** 0819009700

Owner Information

Owner Name:	SCHAEFER ALBERT P SCHAEFER FRIEDA G	**Use:**	COMMERCIAL
		Principal Residence:	NO
Mailing Address:	C/O HOST HOTEL & RESORTS 6903 ROCKLEDGE DR STE 1500 BETHESDA MD 20817-1862	**Deed Reference:**	1) / 3346/ 154 2)

Location & Structure Information

Premises Address
2323 YORK RD

Legal Description
1.788 AC ES YORK RD
600 S TALBOTT AVE

Map	Grid	Parcel	Sub District	Subdivision	Section	Block	Lot	Assessment Area	Plat No:
51	23	117						2	Plat Ref:

Special Tax Areas
Town
Ad Valorem
Tax Class

Primary Structure Built	Enclosed Area	Property Land Area	County Use
1989	5,521 SF	1.78 AC	06

Stories	Basement	Type	Exterior

Value Information

	Base Value	Value As Of 01/01/2008	Phase-in Assessments As Of 07/01/2007	As Of 07/01/2008
Land	1,101,000	1,418,000		
Improvements:	647,600	808,200		
Total:	1,748,600	2,226,200	1,748,600	1,907,800
Preferential Land:	0	0	0	0

Transfer Information

Seller:	SMITH JOSEPH E JR ET AL	**Date:**	05/13/1958	**Price:**	$30,500
Type:	IMPROVED ARMS-LENGTH	**Deed1:**	/ 3346/ 154	**Deed2:**	
Seller:		**Date:**		**Price:**	
Type:		**Deed1:**		**Deed2:**	
Seller:		**Date:**		**Price:**	
Type:		**Deed1:**		**Deed2:**	

Exemption Information

Partial Exempt Assessments	Class	07/01/2007	07/01/2008
County	000	0	0
State	000	0	0
Municipal	000	0	0

Tax Exempt: NO
Exempt Class:

Special Tax Recapture:
* NONE *

D.S. THALER & ASSOCIATES, INC.

7115 AMBASSADOR ROAD, P.O. BOX 47428, BALTIMORE, MARYLAND 21244-7428
(410) 944-ENGR (410) 944-3647 FAX (410) 944-3684

TO:	ZONING OFFICE	DATE:	12.29.06
	BALTIMORE COUNTY, MARYLAND	RE:	**2323 YORK ROAD**
	111 W. CHESAPEAKE AVENUE		
	TOWSON, MD 21204	DST&A PN:	2369A
ATTN:	MR. CARL RICHARDS	CASE # :	

- [x] We are submitting
- [ ] We are forwarding
- [ ] We are returning
- [ ] We request

- [x] Herewith
- [ ] Regular U.S. Mail
- [x] Hand Delivered
- [ ] Federal Express/Courier Service

NO.	DESCRIPTION
2	SITE PLANS
2	DRC LETTERS

Remarks: In accordance with the DRC meeting held on 11.13.06, no action was necessary to re-stripe the existing parking lot. Enclosed is a site plan, for your file, that satisfies the parking requirement.

- [ ] In accordance with your request
- [ ] For your review
- [ ] For processing
- [ ] Plans reviewed and accepted
- [ ] Plans reviewed and accepted as noted
- [ ] For revision by you

- [x] For your file
- [ ] Please call when ready
- [ ] Please return to this office
- [ ] Approval requested
- [ ] Conference requested at your convenience
- [ ] _____

For further information, please contact the writer at this office

Enclosure [x] F. VERNON BOOZER, ESQ.
cc: file [x] DAVID S. THALER, PE, LS
cc: Client [x] DRS. MITHCERLING

Sincerely yours,

STACEY A. MCARTHUR

Baltimore County Government
Department of Permits and
Development Management

111 West Chesapeake Avenue
Towson, MD 21204

410-887-3335

November 27, 2006

D. S. Thaler & Associates, Inc.
7115 Ambassador Road
Baltimore, MD 21244

RE: York Road
2323 York Road
DRC Number 111306A; Dist. 8C3

Dear Sir or Madam:

Pursuant to Article 25A, Section 5 (U) of the Annotated Code of Maryland, and as provided in Section 602 (d) of the Baltimore County Charter, and Sections 32-1-101, 32-3-401, and 32-3-517 of the Baltimore County Code, this letter constitutes an administrative order and decision on the request for issuance, renewal, or modification of a license, permit, approval, exemption, waiver, or other form of permission you filed with this department.

Your request has been submitted for careful review and consideration to the Development Review Committee (DRC), which is composed of representatives from each of those departments involved in land-use decisions. These representatives are designees of the directors of these departments. The purpose of the DRC is to ensure compliance with Section 32-4-106 and Section 32-4-262 of the Baltimore County Code and to make recommendations to the Director, Department of Permits and Development Management.

The DRC has, in fact, met in an open meeting on November 13, 2006, and has decided no DRC action is necessary.

Sincerely,

Timothy Kotroco
Director

TK:DTR:dak
c: file

D.S. THALER & ASSOCIATES, INC.

7115 AMBASSADOR ROAD, P.O. BOX 47428, BALTIMORE, MARYLAND 21244-7428
(410) 944-ENGR (410) 944-3647 FAX (410) 944-3684 EMAIL dsta@erols.com

TO:	PDM	DATE:	10.18.06
	BALTIMORE COUTY MARYLAND	RE:	2323 YORK ROAD
	111 W. CHESAPEAKE AVE., ROOM 123		DRC
	TOWSON, MARYLAND 21204	DST&A PN:	2369
ATTN:	MR. DONALD RASCOE	PDM # :	

- [x] We are submitting
- [ ] We are forwarding
- [ ] We are returning
- [ ] We request

- [x] Herewith
- [ ] Regular U.S. Mail
- [x] Hand Delivered
- [ ] Federal Express/Courier Service

NO.	DESCRIPTION
1	DRC FILING PACKAGE
	(9 RED LINES, 3 APPLICATIONS WITH ATTACHED REQUEST LETTER,
	1 CHECKLIST AND $50.00 FILING FEE)

Remarks:

- [ ] In accordance with your request
- [ ] For your review
- [x] For processing
- [ ] Plans reviewed and accepted
- [ ] Plans reviewed and accepted as noted
- [ ] For revision by you

- [ ] For your use
- [ ] Please call when ready
- [ ] Please return to this office
- [ ] Approval requested
- [ ] Conference requested at your convenience
- [ ] _____

For further information, please contact the writer at this office

Enclosure
cc: file
cc: Client

- [x] DR. WILLIAM MITCHERLING
- [x] DR. JOHN MITCHERLING
- [x] VERNON BOOZER, ESQ.
- [x] DAVID S. THALER, P.E., L.S.
- [x] MARK S. VASZIL

Sincerely yours,

STACEY A. MCARTHUR

BALTIMORE COUNTY
DEPARTMENT OF PERMITS AND DEVELOPMENT MANAGEMENT

DEVELOPMENT REVIEW COMMITTEE (DRC) APPLICATION

DRC#_____
County Use Only

Filing Date: _____
Stamp in w/PDM date stamp here

This application must be accompanied by the following:

1. **One copy of the completed DRC application form checklist.**
2. **Three copies of this DRC application, completed in full.**
3. **Three copies of a letter of request (attach one to each DRC application).**
4. **Nine copies of the plan folded to 8 ½ x 11 inches.**
5. **$50 fee (check made payable to Baltimore County and non-refundable; do not staple check to request form)**

Project Name: **2323 York Road** PDM File: _____

Project Address: **2323 York Road** Zip Code: **21093** ADC Map: **18 10K**

Councilmanic District: **03** Election District: **08** Project Acreage: **1.9 Ac.±**

Tax Account No(s): **#0819009700** Zoning: **BL & MR**

Engineer: **D. S. Thaler & Assoc., Inc.** Engineer's Phone No.: **410-944-3647**

Applicant: **D. S. Thaler & Assoc., Inc.** Applicant's Phone No.: **410-944-3647**

Address: **7115 Ambassador Road**

Baltimore, Maryland Zip: **21244-7428** Email: **smcarthur@dsthaler.com**

Is this an antenna?___Yes_X_No If "Yes" check one of the following: Cellular ____Water Tower ____MonoPole_____

(CAC) (WTC) (CFC)

REQUESTED ACTION (TO BE COMPLETED BY THE APPLICANT)

( ) Limited Exemption under Section 32-4-106 (_____) (_____)
( ) Material Amendment to the plan
(X) Plan Refinement
( ) Waiver of public works standards
( ) Requires a Zoning ( ) Special Hearing; ( ) Special Exception; ( ) Variance
( ) Other _____

This application must be accompanied by a written request. That request must be in the form of a letter, legibly printed or typed, and signed by the applicant. The letter must contain the name, address and telephone number of the applicant and must provide details of the request.

Please note that a DRC application form checklist is available in room 123 of the Baltimore County Office Building and on the Baltimore County web site at www.co.ba.md.us. A copy of that checklist must be completed and included along with this DRC application.

Please see the DRC application form checklist for complete submittal requirements.

c: Council, Planning, DEPRM rev.

D.S. THALER & ASSOCIATES, INC.

7115 AMBASSADOR ROAD • P.O. BOX 47428 • BALTIMORE, MARYLAND 21244-7428
(410) 944-ENGR • (410) 944-3647 • FAX (410) 944-3684

October 18, 2006

Mr. Donald T. Rascoe
Development Manager
Baltimore County, Maryland
Department of Permits and Development Management
111 West Chesapeake Avenue
Towson, MD 21204

RE: 2323 York Road
DRC Request

Dear Mr. Rascoe:

This letter is to accompany a request for a finding by the Development Review Committee (DRC) that the proposed revisions as indicated on the enclosed "red-lined" plans meet the requirements as a Refinement to a previously approved Plan.

The An Poiten Stil is located at 2323 York Road, along the east side of the road. The property is comprised of approximately 1.8 acres± and is zoned BL and MR.

In order to satisify the parking requirements, the parking lot will be re-striped and the building area will be reduced as indicated on the enclosed plans. Overlaid on the approved Site Grading Plan in red is the proposed re-striping for the parking lot. The "green" represents the survey of the current on-site conditions.

Therefore, on behalf of our client, Drs. Mitcherling, we respectfully request to process the proposed changes as a 'refinement' to the previously approved Plan.

Thank you for your consideration in this matter. Should you have any questions, please do not hesitate to contact our office.

Very truly yours,

D.S. THALER & ASSOC., LLC.

Stacey A. McArthur, R.L.A.

Copy: Dr. William Mitcherling
Dr. John Mitcherling
Vernon Boozer, Esquire
David S. Thaler, P.E., L.S.
Mark Vaszil

H:\CORRESPONDENCE\PROJECTS\York Road 2323\DRC\DRC-LTR.doc

BALTIMORE COUNTY
DEPARTMENT OF PERMITS AND DEVELOPMENT MANAGEMENT

Development Review Committee (DRC) Application Form Checklist
2323 YORK ROAD

All applications to the DRC must include the following:

__X__ 1. Three copies of the DRC Application.
__X__ 2. Three copies (one attached to each DRC Application) of a letter of request to the DRC containing the following:
- __X__ a. Name, address and phone number of the applicant
- __X__ b. Explanation of the request to the DRC.
- __X__ c. Signature of the applicant.

__X__ 3. Nine copies of a plan*** showing the following:
- __X__ a. A plan title box noting "Plan to accompany DRC request."
- __X__ b. North arrow.
- __X__ c. Vicinity map.
- __X__ d. Election district.
- __X__ e. Councilmatic district.
- __X__ f. Property tax account numbers.
- __X__ g. Site property owner's name and address.
- __X__ h. Scale of the drawing.
- __X__ i. Boundaries of the property lines shown in heavy bold lines.
- __X__ j. Lengths of property lines
- __X__ k. Area of project site in square feet and acreage.
- __X__ l. Proposed structures, heights and dimensions.
- __X__ m. Setbacks.
- __N/A__ n. Location of existing wells and septic systems.
- __X__ o. Zoning information:
  - __X__ 1. Current zoning on the property.
  - __N/A__ 2. Case numbers of any zoning hearings.
  - __N/A__ 3. Dates of zoning orders.
  - __N/A__ 4. Indication of what was granted or denied by the zoning commissioner.
  - __N/A__ 5. Copies of zoning orders attached to the DRC Application.

***Note: For refinements and material changes to previously approved plans you must use copies of the last approved plan to show items 3a-o listed above. Please show all changes in red.

__X__ 4. One copy of this checklist completed and signed by the applicant or the consultant.
__X__ 5. Check for $50 payable to Baltimore County, MD (do not staple to forms).

I have reviewed the DRC application and plan using this checklist to insure that the application and plan are complete. I understand that an incomplete application or plan may cause the DRC to delay its action on this request.

Signed Stacey A. McArthur 10.18.06
Date

Print Name Stacey A. McArthur, R.L.A.

rev. 10/2004

D.S. THALER & ASSOCIATES, INC.
BALTIMORE, MD 21244-7428

20672

DATE	INVOICE NO.	DESCRIPTION	INVOICE AMOUNT	DEDUCTION	BALANCE
10-16-06	101606	The Still 02369c	50.00	.00	50.00
CHECK DATE 10-16-06	CHECK NUMBER 20672	TOTALS	50.00	.00	50.00

PLEASE DETACH THIS PORTION AND RETAIN FOR YOUR RECORDS.

D.S. THALER & ASSOCIATES, INC.
7115 AMBASSADOR RD.
P.O. BOX 47428
BALTIMORE, MD 21244-7428
(410) 944-3647

M&T BANK
BALTIMORE, MARYLAND

7-11
520

20672

Pay: Fifty dollars and no cents

DATE	CHECK NO.	AMOUNT
October 16, 2006	20672	$********50.00**

PAY TO THE ORDER OF

Baltimore County, Maryland
400 Washington Avenue
Towson, MD 21204

⑈020672⑈ ⑆052000113⑆ 190⑈4104 8⑈

2697-13-7

INVALID SCROLL CHARACTER - VALID CHARACTERS ARE B AND F - TRY AGAIN

DATE: 03/15/2006 AUTOMATED PERMIT TRACKING SYSTEM BP1072M

TIME: 08:40:21 FULL SCREEN INQUIRY

SEL	STREET ADDRESS	PERMIT NO	CONTROL NO
2323	YORK RD	B533905	C-
2323	YORK RD	B547358	SI-2
2323	YORK RD	B548497	TT
2323	YORK RD	B584471	SI-2
2323	YORK RD	B585072	TT
2323	YORK RD	B622537	TT
2323	YORK RD	E536386	536386
2352	YORK RD	E534977	534977
2352	YORK RD	P535002	535002
2373	YORK RD	B621521	SI-2
2401	YORK RD	E605756	605756
2405	YORK RD	B541604	C-
2405	YORK RD	B543677	FD-04
2405	YORK RD	E543424	543424
2405	YORK RD	E547373	547373
2405	YORK RD	P543413	543413
2405	YORK RD	P547279	547279
2430	YORK RD	B543210	MR

PAGE SCROLL (F/B) F CLEAR TO RETURN TO THE MENU

ENTER THE LETTER -X- NEXT TO THE ADDRESS TO RECEIVE PERMIT DETAIL

DATE: 03/15/2006 AUTOMATED PERMIT TRACKING SYSTEM BP1072M
TIME: 09:21:54 FULL SCREEN INQUIRY

SEL	STREET ADDRESS	PERMIT NO	CONTROL NO
2322	YORK RD	E550527	550527
2322	YORK RD	E552510	552510
2322	YORK RD	P544297	544297
2322	YORK RD	P554401	554401
2322A	YORK RD	E544563	544563
2323	YORK RD	B533905	C-
2323	YORK RD	B547358	SI-2
2323	YORK RD	B548497	TT
2323	YORK RD	B584471	SI-2
2323	YORK RD	B585072	TT
2323	YORK RD	B622537	TT
2323	YORK RD	E536386	536386
2323	YORK RD	B621521	SI-2
2352	YORK RD	E534977	534977
2352	YORK RD	P535002	535002
2401	YORK RD	E605756	605756
2405	YORK RD	B541604	C-
2405	YORK RD	B543677	FD-04

PAGE SCROLL (F/B) F CLEAR TO RETURN TO THE MENU
ENTER THE LETTER -X- NEXT TO THE ADDRESS TO RECEIVE PERMIT DETAIL

PERMIT NO	CONTROL NO	ADDRESS	
B515703	C-	2320	YORK RD
B517029	GRC-	2320	YORK RD
B393278	RA	2322	YORK RD
P389274		2322	YORK RD
B009641	RA	2323	YORK RD
B024218	SI-5652-53	2323	YORK RD
B024221	SI-5654	2323	YORK RD
B031587	FD-641-89	2323	YORK RD
B333994	C-	2323	YORK RD
B372570	C-	2323	YORK RD
B374429	C-	2323	YORK RD
B384386	SI-1	2323	YORK RD
B389659	C-	2323	YORK RD
B391155	C-	2323	YORK RD
B436354	C-	2323	YORK RD
B444923	GRC-	2323	YORK RD
B456717	C-	2323	YORK RD
B478762	TT	2323	YORK RD
B511374	SI-2	2323	YORK RD
B512365	TT	2323	YORK RD
E009287	009287	2323	YORK RD
E009582	009582	2323	YORK RD
E024220	024220	2323	YORK RD
E383264	383264	2323	YORK RD
E439396	439396	2323	YORK RD
E478730	478730	2323	YORK RD
E482506	482506	2323	YORK RD
P009224	009224	2323	YORK RD
P011629	011629	2323	YORK RD
P380819	380819	2323	YORK RD
P476393	476393	2323	YORK RD
B194349	MC	2326	YORK RD
B382078	C-	2330	YORK RD
B001597	C-019-89	2331	YORK RD
B001600	C-018-89	2331	YORK RD
B001971	ME-	2331	YORK RD
B003239	C-157-89	2331	YORK RD
B003450	C-170-89	2331	YORK RD
B003636	FD-062-89	2331	YORK RD
B004425	MEC-251-89	2331	YORK RD
B010153	FD-235-89	2331	YORK RD
B044385	FD-90	2331	YORK RD
B044387	FD-90	2331	YORK RD
B044573	SI-6169	2331	YORK RD
B353789	C-	2331	YORK RD
E004889	004889	2331	YORK RD
E008672	008672	2331	YORK RD
E009369	009369	2331	YORK RD
E010939	010939	2331	YORK RD
E016386	016386	2331	YORK RD
E044474	044474	2331	YORK RD
E353382	353382	2331	YORK RD
E518728	518728	2331	YORK RD
P006301	006301	2331	YORK RD
P006302		2331	YORK RD
P006303		2331	YORK RD
B449497	MR	2338	YORK RD
B388301	C-	2340	YORK RD
E394466	394466	2340	YORK RD
E412227	412227	2340	YORK RD
P394832	394832	2340	YORK RD
E307166	307166	2343	YORK RD
P187560		2343	YORK RD
P287033		2343	YORK RD
B153888	SI-8962	2344	YORK RD
B227135	SI-11100	2344	YORK RD
B405394	SI-1	2345	YORK RD
E405403		2345	YORK RD
E418374	418374	2345	YORK RD
E047263	047263	2346	YORK RD
B510721	MR	2352	YORK RD
B526774	C-	2352	YORK RD
B526780	RAC-	2352	YORK RD
E289805	289805	2352	YORK RD
B498246	SI-1	2400	YORK RD
E498250	498250	2400	YORK RD
B216201	RA	2401	YORK RD
B216202	C-	2401	YORK RD
B217800	GRC-	2401	YORK RD
B434473	C-	2401	YORK RD
B492607	SI-1	2401	YORK RD
E223618		2401	YORK RD
E224676	224676	2401	YORK RD
E225409	225409	2401	YORK RD
E225704		2401	YORK RD
E442327	442327	2401	YORK RD
E492616	492616	2401	YORK RD
P220791	220791	2401	YORK RD
P222436	222436	2401	YORK RD
P443305		2401	YORK RD
P443307	443307	2401	YORK RD
B001818	FD-007-89	2405	YORK RD
B320510	C-	2405	YORK RD
E187950	187950	2405	YORK RD
E321332		2405	YORK RD
E438699	438699	2405	YORK RD
E439407	439407	2405	YORK RD
P320868	320868	2405	YORK RD
B156433	COC-307-93	2412	YORK RD
B182566	SI-9718	2412	YORK RD
E154631	154631	2412	YORK RD
B076461	SI-7035	2413	YORK RD
B040950	C-2366-89	2414	YORK RD
B040951	COC-236689	2414	YORK RD
B105562	COC-174291	2414	YORK RD
B109675	C-2014-91	2414	YORK RD
E096011	096011	2414	YORK RD
B008792	C-506-89	2415	YORK RD
B008794	RA	2415	YORK RD
B026842	C-1462-89	2415	YORK RD

PERMIT NO	CONTROL NO	ADDRESS	
B026843	C-1463-89	2415	YORK RD
B026844	C-1464-89	2415	YORK RD
B325335	C-	2415	YORK RD
B325336	MC-	2415	YORK RD
B487805	TAC-	2415	YORK RD
E035548	035548	2415	YORK RD
E211893	211893	2415	YORK RD
E329827	329827	2415	YORK RD
E331171	331171	2415	YORK RD
E492990		2415	YORK RD
P034998	034998	2415	YORK RD
B033555	RA	2418	YORK RD
B127946	MC-	2418	YORK RD
B467797	C-	2418	YORK RD
B474781	SI-1	2418	YORK RD
B474802	C-	2418	YORK RD
E121774	121774	2418	YORK RD
E125077	125077	2418	YORK RD
E125906	125906	2418	YORK RD
E474317	474317	2418	YORK RD
E477971	477971	2418	YORK RD
P471930	471930	2418	YORK RD
P471987	471987	2418	YORK RD
B147179	C-1748-92	2420	YORK RD
B471095	RA	2420	YORK RD
B497229	SI-1	2420	YORK RD
B497232	SI-1	2420	YORK RD
B497299	SI-1	2420	YORK RD
E157824	157824	2420	YORK RD
E159365	159365	2420	YORK RD
E485588	485588	2420	YORK RD
E494540		2420	YORK RD
P472703		2420	YORK RD
P492174		2420	YORK RD
P497844	497844	2420	YORK RD
B475905	C-	2420-24	YORK RD
B481529	GRC	2420-24	YORK RD
P496578	496578	2420-24	YORK RD
B045891	C-328-90	2424	YORK RD
B157360	SI-375-93	2424	YORK RD
B157363	C-377-93	2424	YORK RD
B157364	C-378-93	2424	YORK RD
B305477	TAC-	2424	YORK RD
B334474	TAC-	2424	YORK RD
B436438	GRC-	2424	YORK RD
B459846	RAC-	2424	YORK RD
B459848	TA	2424	YORK RD
B471092	RA	2424	YORK RD
E035909	035909	2424	YORK RD
E160296	160296	2424	YORK RD
P472705		2424	YORK RD
B185998	SI-9905-11	2425	YORK RD
B343519	C-	2425	YORK RD
E347739	347739	2425	YORK RD
B062674	C-1232-90	2430	YORK RD
B122517	C-448-92	2430	YORK RD
B126251	SI-8146-47	2430	YORK RD
B191743	SI-10156	2430	YORK RD
B213700	C-	2430	YORK RD
B225626	C-	2430	YORK RD
B478401	SI-2	2430	YORK RD
B486753	SI-1	2430	YORK RD
E122649	122649	2430	YORK RD
E154108	154108	2430	YORK RD
E156007	156007	2430	YORK RD
E231632	231632	2430	YORK RD
E241479	241479	2430	YORK RD
E242651	242651	2430	YORK RD
E486758	486758	2430	YORK RD
E505942	505942	2430	YORK RD
P122717	122717	2430	YORK RD
P242065		2430	YORK RD
E443081	443081	2442-44	YORK RD
B110133	C-2043-91	2444	YORK RD
B110136	TAC-205091	2444	YORK RD
B110139	C-2051-91	2444	YORK RD
B142910	C-1491-92	2444	YORK RD
B144847	TAC-160192	2444	YORK RD
B316987	C-	2444	YORK RD
E144844	144844	2444	YORK RD
E318197	318197	2444	YORK RD
P148561	148561	2444	YORK RD
P217343	217343	2444	YORK RD
B018291	C1000-89	2446	YORK RD
P174588	174588	2446	YORK RD
B076736	BL	300	YORK RD
B036641	SI-5949-51	305	YORK RD
B083413	C-298-91	305	YORK RD
B260602	SI-12171	305	YORK RD
B308752	C-	305	YORK RD
B434973	C-	305	YORK RD
B459355	SI-1	305	YORK RD
B508790	C-	305	YORK RD
E045902	045902	305	YORK RD
E083642	083642	305	YORK RD
E228972		305	YORK RD
E436648	436648	305	YORK RD
E437262	437262	305	YORK RD
E437539	437539	305	YORK RD
E514022	514022	305	YORK RD
E516772	516772	305	YORK RD
P085092	085092	305	YORK RD
P437238	437238	305	YORK RD
B217825	TAC-	31	YORK RD
B298776	TAC-	31	YORK RD
B511998	RAC-	31	YORK RD
B395162	SI-1	319	YORK RD
E001786	001786	319	YORK RD
B102184	C-1528-91	32	YORK RD
B102186	GRC-152991	32	YORK RD

PANEL BP1003M

TIME: 08:32:33 AUTOMATED PERMIT TRACKING SYSTEM LAST UPDATE 02/28/2005
DATE: 03/15/2006 GENERAL PERMIT APPLICATION DATA PDM 15:32:05

PERMIT #: B584471 PROPERTY ADDRESS
RECEIPT #: A514523 2323 YORK RD
CONTROL #: SI-2 SUBDIV:
XREF #: B584471 TAX ACCOUNT #: 0819009700 DISTRICT/PRECINCT 08 01

OWNERS INFORMATION (LAST, FIRST)
FEE: 50.00 NAME: MITCHERLING, JOHN MD
PAID: 50.00 ADDR: 2323 YORK RD 21093
PAID BY: APPL

DATES APPLICANT INFORMATION
APPLIED: 02/28/2005 NAME: CRAIG HALL
ISSUED: 02/28/2005 COMPANY: SIGNATURE SIGNS
OCCPNCY: ADDR1: 4132 E JOPPA RD
FINAL INSPECT: ADDR2: BALTO MD 21236
INSPECTOR: 08C PHONE #: 410.256.9550 LICENSE #:
NOTES: CM

PASSWORD :

ENTER - PERMIT DETAIL PF3 - INSPECTIONS PF7 - DELETE PF9 - SAVE
PF2 - APPROVALS PF4 - ISSUE PERMIT PF8 - NEXT PERMIT PF10 - INQRY

No Temp. Permits (Sign)
for 2006

PANEL BP1004M

TIME: 08:32:38 AUTOMATED PERMIT TRACKING SYSTEM LAST UPDATE 02/28/2005

DATE: 03/15/2006 BUILDING DETAIL 1 PDM 15:33:19

DRC#

PERMIT # B584471 PLANS: CONST 1 PLOT PLAT DATA EL 2 PL 2

TENANT AU POTIN STILL

BUILDING CODE: CONTR: SIGNATURE SIGNS

IMPRV 1 ENGNR:

USE 18 SIGN SELLR:

FOUNDATION BASE WORK: ERECT TEMPORARY BANNER FROM 3/1-3/30/05

5X10=50SFT MUST BE ON SITE

CONSTRUC FUEL SEWAGE WATER

1E 1E

CENTRAL AIR

ESTIMATED COST

PROPOSED USE: RESTAURANT & SIGN(TEMPORARY)

OWNERSHIP: EXISTING USE: RESTAURANT

RESIDENTIAL CAT:

#EFF: #1BED: #2BED: #3BED: TOT BED: TOT APTS:

1 FAMILY BEDROOMS: PASSWORD:

ENTER - NEXT DETAIL PF2 - APPROVALS PF7 - PREV. SCREEN PF9 - SAVE

PF1 - GENERAL PERMIT PF3 - INSPECTIONS PF8 - NEXT SCREEN CLEAR - MENU

PANEL BP1003M

TIME: 08:33:35 AUTOMATED PERMIT TRACKING SYSTEM LAST UPDATE 03/07/2005

DATE: 03/15/2006 GENERAL PERMIT APPLICATION DATA PLX 12:59:26

PERMIT #: B585072 PROPERTY ADDRESS

RECEIPT #: A514984 2323 YORK RD

CONTROL #: TT SUBDIV: 600 S TALBOTT AVE

XREF #: B585072 TAX ACCOUNT #: 0819009700 DISTRICT/PRECINCT 08 01

OWNERS INFORMATION (LAST, FIRST)

FEE: 40.00 NAME: SCHAEFER, ALBERT P & FRIEDA G C/O GRUBB & ELLIS

PAID: 40.00 ADDR: 6550 ROCK SPRING DR STE 150

PAID BY: APP

DATES APPLICANT INFORMATION

APPLIED: 03/07/2005 NAME: MIKE O'CONNOR

ISSUED: 03/07/2005 COMPANY: LOANE BROS

OCCPNCY: ADDR1: 1302 E JOPPA RD

FINAL INSPECT: ADDR2: TOWSON MD 21286

INSPECTOR: 08C PHONE #: 410-823-6050 LICENSE #:

NOTES: MR/JT

PASSWORD :

ENTER - PERMIT DETAIL PF3 - INSPECTIONS PF7 - DELETE PF9 - SAVE

PF2 - APPROVALS PF4 - ISSUE PERMIT PF8 - NEXT PERMIT PF10 - INQRY

Tent for 2005

PANEL BP1004M

TIME: 08:33:41 AUTOMATED PERMIT TRACKING SYSTEM LAST UPDATE 03/07/2005

DATE: 03/15/2006 BUILDING DETAIL 1 DAS 13:15:14

DRC#

PERMIT # B585072 PLANS: CONST 0 PLOT 1 PLAT 0 DATA 0 EL 1 PL 2

TENANT AN POINTIN STILL

BUILDING CODE: CONTR: LOANE BROS INC

IMPRV 1 ENGNR:

USE 08 SELLR:

FOUNDATION BASE WORK: ERECT TENT FROM 3/16/05 TO 3/20/05 ON SIDE/REAR PROPERTY FOR ST PATRICKS DAY FESTIVAL. TO BE USED FOR ENTERTAINMENT & DRINKS FOR SALE. CERT OF FLAME RETARDATION ATTCH. 80'X130'X17'=X 7600SF. HEAT AND ASILES AND EXIT WAYS TO BE APPROVED BY FIRE MARSHAL BEFORE OCCUPANCY.

CONSTRUC FUEL SEWAGE WATER

CENTRAL AIR

ESTIMATED COST

6,000 PROPOSED USE: RESTAURANT & TENT

OWNERSHIP: 1 EXISTING USE: RESTAURANT

RESIDENTIAL CAT:

#EFF: #1BED: #2BED: #3BED: TOT BED: TOT APTS:

1 FAMILY BEDROOMS: PASSWORD:

ENTER - NEXT DETAIL PF2 - APPROVALS PF7 - PREV. SCREEN PF9 - SAVE

PF1 - GENERAL PERMIT PF3 - INSPECTIONS PF8 - NEXT SCREEN CLEAR - MENU

PANEL BP1003M

TIME: 08:37:54 AUTOMATED PERMIT TRACKING SYSTEM LAST UPDATE 03/07/2006
DATE: 03/15/2006 GENERAL PERMIT APPLICATION DATA MXR 15:40:46

PERMIT #: B622537 PROPERTY ADDRESS
RECEIPT #: A539609 2323 YORK RD
CONTROL #: TT SUBDIV: 600 S TALBOTT AVE
XREF #: B622537 TAX ACCOUNT #: 0819009700 DISTRICT/PRECINCT 08 11

OWNERS INFORMATION (LAST, FIRST)

FEE: 40.00 NAME: SCHAEFER ALBERT P & FRIEDA G C/O GRUBB+ELLIS MGMT
PAID: 40.00 ADDR: 6550 ROCK SPRING DR.STE 150,BETHESDA,MD.20817-1134
PAID BY: APPLICANT

DATES APPLICANT INFORMATION

APPLIED: 03/07/2006 NAME: ALBERT SCHAEFER
ISSUED: COMPANY:
OCCPNCY: ADDR1: 10400 FERNWOOD RD.
FINAL INSPECT: ADDR2: BETHESDA,MD.20817-1109
INSPECTOR: 08C PHONE #: 410-561-7902 LICENSE #:
NOTES: MR/MR

PASSWORD :

ENTER - PERMIT DETAIL PF3 - INSPECTIONS PF7 - DELETE PF9 - SAVE
PF2 - APPROVALS PF4 - ISSUE PERMIT PF8 - NEXT PERMIT PF10 - INQRY

Rent
2006

PANEL BP1004M

TIME: 08:38:00 AUTOMATED PERMIT TRACKING SYSTEM LAST UPDATE 03/07/2006

DATE: 03/15/2006 BUILDING DETAIL 1 MXR 15:48:40

DRC#

PERMIT # B622537 PLANS: CONST 0 PLOT 4 PLAT 0 DATA 0 EL 2 PL 2

TENANT AN POITIN STIL

BUILDING CODE: CONTR: PARTY PERFECT

IMPRV 7 ENGNR:

USE 08 SELLR:

FOUNDATION BASE WORK: ERECT TENT FROM 3/16/06 TO 3/19/06 FOR ST. PATRICK'S DAY FESTIVAL(STAGE W/BAND) ON REAR PROPERTY.40X130=5200SF+60X40=2400=7600SF TOTAL 1TENT-"T"SHAPED,TOILET FACILITIES IN EX.BLDG.+ ALSO PORT-A-POTS,CERTIFICATE OF FLAME RETARDA- TION ATTACHED.SEND TO FM OFFICE FOR REVIEW-NSH

CONSTRUC FUEL SEWAGE WATER

1E 1E

CENTRAL AIR

ESTIMATED COST

6,000.00 PROPOSED USE: RESTAURANT AND TENT

OWNERSHIP: 1 EXISTING USE: RESTAURANT

RESIDENTIAL CAT:

#EFF: #1BED: #2BED: #3BED: TOT BED: TOT APTS:

1 FAMILY BEDROOMS: PASSWORD:

ENTER - NEXT DETAIL PF2 - APPROVALS PF7 - PREV. SCREEN PF9 - SAVE

PF1 - GENERAL PERMIT PF3 - INSPECTIONS PF8 - NEXT SCREEN CLEAR - MENU

BALTIMORE COUNTY, MARYLAND

DEPARTMENT OF PERMITS AND DEVELOPMENT MANAGEMENT

TOWSON, MARYLAND 21204

TIMOTHY M. KOTROCO
DIRECTOR

JOHN R. REISINGER
BUILDINGS ENGINEER

BUILDING PERMIT

PERMIT #: B621521 CONTROL #: SI-2 DIST: 09 PREC: 01
DATE ISSUED: 02/28/2006 TAX ACCOUNT #: CLASS:

PLANS: CONST 1 PLOT R PLAT DATA ELEC NO PLUM NO
LOCATION: 2323 YORK RD
SUBDIVISION:

OWNERS INFORMATION
NAME: MITCHERLING, JOHN MD
ADDR: 2323 YORK RD 21093

TENANT: AU POTIN STILL
CONTR: SIGNATURE SIGNS
ENGNR:
SELLR:
WORK: ERECT TEMPORARY BANNER FROM 3/1-3/30/06
5X10=50SFT MUST BE ON SITE

BLDG. CODE:
RESIDENTIAL CATEGORY: OWNERSHIP:

PROPOSED USE: RESTAURANT & SIGN(TEMPORARY)
EXISTING USE: RESTAURANT

TYPE OF IMPRV: NEW BULDING CONTRUCTION
USE: SIGN
FOUNDATION: BASEMENT:
SEWAGE: PUBLIC EXIST WATER: PUBLIC EXIST

LOT SIZE AND SETBACKS

SIZE:
FRONT STREET:
SIDE STREET:
FRONT SETB:
SIDE SETB:
SIDE STR SETB:
REAR SETB:

PLEASE REFER TO PERMIT NUMBER WHEN MAKING INQUIRIES.

Inspected 2/8/06

29 @ 8'
3 @ 8'4"
25 @ 8'
3 @ 8'6"
4 @ 8'4"
20 @ 8'
13 @ 8'6"
5 @ 8'6"
2 @ 8'
4 @ 8'
2 @ 8'

110 Total
in lieu of req 119

Aisle widths A = 21' Req 22
B = 20'6"

Setback from St R-O-W = 6.5 to 8' Req 10

Parking Islands width > 9' actual 5'5" + 6'

Building to Parking Setback > 6' actual 4'
(Entrapeize Sign)

Sign built appears to be > 100 SF
9'x17' = 153 MIN MAX 10'x18 = 180 SF (1) pic

Roof Sign built w/o permit

"THE STILL"
REST. PARKING

409.5 ONLY SURPLUS SPACES CAN BE COMPACT

B. ~~WHAT IS LIQ LIC. CLASS? IF D = 20 PS/1,000 NOT 16/1,000 ON PLAN~~

PATIO AREA IF SEATING MUST HAVE PARKING SUPPORT

8x12 + SHEDS NEED PARKING SUPPORT No ACC. USES IN NON RES BL/MR

10 X 12 PARKING IN MR + SHEDS. No USES PERMITD IN MR WITHOUT SPLIT.

96 IF NOT CLASSD. 103 RQD IS CORRECT

120

216 ☐

105 PROVIDED

+ 3 COMPACT. — ACTUALLY 5 ON PLAN NOT 3

PATIO 522 ☐ 108

~~STILL OK AS SURPLUS~~

IF SURPLUS

216 SHEDS

+ 522 PATIO

738 ☐

6392 ☐ BLDG

+ 738

7,130 ☐ = 114.08 OR 115 P/S.

* OR 10 SHORT OF MINIMUM +

CLASS B LIQ LIC.

No COMPACT ALLOWED.

* ~~10'~~ ST CL STBK EXIST DOC. OVERLIKE

* MR PARKING

COVAHEY & BOOZER, P.A.

ATTORNEYS AT LAW
614 BOSLEY AVENUE
TOWSON, MARYLAND 21204

410-828-9441

FAX 410-823-7530

EDWARD C. COVAHEY, JR.
F. VERNON BOOZER *
MARK S. DEVAN
THOMAS P. DORE
MICHAEL T. PATE
STACIE D. TRAGESER
BRUCE EDWARD COVAHEY
JENNIFER MATTHEWS HERRING

*ALSO ADMITTED TO D.C. BAR

TO V.T.
"The Still" lease for 2 parking spaces is it enough?
T—

TOWSON, MD 21204

Date: 12/16/05

Fax No: 410 887-8708

TO: TIM KOTROLO

RE: THE STILL
PARKING AGREEMENT

per your request

BRUCE E. COVAHEY
COVAHEY & BOOZER, P.A.

By: [signature]

CONTENTS: 6 pages including cover sheet

If any pages are missing, please call sender at (410) 828-9441.

****

THIS MESSAGE IS INTENDED ONLY FOR THE USE OF THE ADDRESSEE INDICATED ABOVE AND MAY CONTAIN INFORMATION THAT IS PRIVILEGED AND CONFIDENTIAL. IF THE RECIPIENT OF THIS MESSAGE IS NOT THE ADDRESSEE OR THE EMPLOYEE OR AGENT OF THE ADDRESSEE, YOU ARE ADVISED THAT ANY DISSEMINATION OR COPYING OF THIS COMMUNICATION IS PROHIBITED. IF YOU HAVE RECEIVED THIS COMMUNICATION IN ERROR, PLEASE NOTIFY COVAHEY & BOOZER, P.A. IMMEDIATELY BY TELEPHONE AND RETURN THE ORIGINAL MESSAGE TO COVAHEY & BOOZER, P.A. AT THE ABOVE ADDRESS.

LICENSE AGREEMENT

THIS LICENSE AGREEMENT (Agreement") is entered into as of the 29th day of November, 2004, by and between William H. Schaefer, Jr. ("Licensor") and Bad Dog Corp. t/a An Poitin Stil (a Maryland Corporation) ("Licensee").

WITNESSETH

WHEREAS, Licensor is the owner of certain real property known as 2312 York Road, Timonium, MD 21093 ("Property") on which an automobile dealership is operated; and

WHEREAS, Licensee desires the use of a portion of the Property for the parking of up to seven (7) motor vehicles of its employees; and

WHEREAS, Licensor is agreeable to licensing the Premises to Licensee for such use;

NOW, THEREFORE, for the purposes and consideration hereinafter expressed, the parties hereto agree as follows:

ARTICLE I

GENERAL

Subject to the terms and provisions of this Agreement, Licensor hereby grants to Licensee a non-exclusive license of ingress and egress over the Property for access to the Premises and a non-exclusive license for use of the Premises for the purposes set forth above ("License").

ARTICLE II

TERM

The term of this Agreement ("Term") shall be for Thirty (30) years commencing on the 8th day of November, 2004 (the "Commencement Date").

ARTICLE III

LICENSE FEE

Licensee shall pay Licensor without notice, demand, offset, or deduction, in lawful money of the United States of America, at Licensor's address set forth in Article X of this Agreement, or at such other place as Licensor shall designate in writing from time to time $500.00 per month, (the "License Fee"). The License Fee shall be payable in advance on the first day of each calendar month during the term of this Agreement commencing on the Commencement Date. If the Commencement Date shall be a date other than the first day of a month, the rental shall be prorated based on a thirty (30) day month.

7/13/05

PETITION OF BAD DOG CORP., t/a AN POINTIN STIL 2323 York Road Timonium, MD 21093	* * *	CIRCUIT COURT OF MARYLAND FOR BALTIMORE COUNTY
FOR JUDICIAL REVIEW OF THE DECISION OF THE COUNTY BOARD OF APPEALS OF BALTIMORE COUNTY Old Courthouse, Room 47 400 Washington Avenue, Towson, MD 21204	* * *	Case No:03-C-04-7824
IN THE MATTER OF THE APPLICATION FRIEDA G. SCHAEFER; BAD DOG CORP. t/a AN POINTIN STIL 2323 York Road Timonium, MD21093	* * *	
8th Election District, 3rd Councilmanic District	* *	
Case No. 02-165-A before the County Board of Appeals of Baltimore County	*	

RECEIVED
FEB 20 2009
BALTIMORE COUNTY
BOARD OF APPEALS

* * * * * * * * * * * *

MEMORANDUM OPINION

This matter came before the Court on May 18, 2005 on an appeal from a decision of the County Board of Appeals of Baltimore County in Case No. 02-165-A. On July 2, 2004, the County Board of Appeals denied the original Petitioner's[1] request for a variance. For the reasons set forth herein, the judgment of the County Board of Appeals shall be **AFFIRMED**.

[1] The original Petitioner's were Frieda Schaefer, the owner of the property, and Bad Dog Corporation t/s An Poitin Stil ("the Stil"), lessee, the operator of the restaurant.

J.J. Boozer, County Board of Appeals of Balto Co.
P.C. Covahey, Zimmerman, Greater Timonium Community Council

Background

The Stil leased an existing restaurant with a building, parking spaces, and over one acre of property. As a result of a successful and thriving establishment, the Stil decided to expand. Specifically, the Stil expanded its establishment to 7,394 square feet. As a result of the expansion, the parking standards did not comply with the Baltimore County Zoning Regulations 409 (BCZR). BCZR 409.6 sets forth the parking requirements. For restaurants, it is based on the square footage, for every 1,000 square feet, 16 spaces are required.

As a result of the Stil's decision to expand, the parking requirements increased to 119. The property could not accommodate the additional spaces required so, the Stil requested several variances, including; amount of spaces, area setbacks, aisle widths, and islands.

The Stil added a number of parking spaces to the site, which construction necessitated the granting of a forest/stream buffer easement to Baltimore County to prevent further encroachment upon the stream running through the premises. *See Transcript 12/04/03, pp. 36-37.* The People's Counsel for Baltimore County argues that the net result was a very tight and problematic parking

situation. The Stil made various attempts to lease spaces from adjoining or nearby properties. However, none of those efforts resulted in any securely guaranteed spaces in an appropriate location.

Upon review of the site conditions, it was determined that the on site parking did not comply with the provisions of the BCZR. On or about October 22, 2001, the Stil filed a Petition for Variance seeking a number of zoning variances. The Zoning Commissioner of Baltimore county ("Zoning Commissioner") granted the requested variances by order dated March 7, 2002. The Greater Timonium Community Council ("GTCC") subsequently appealed that decision to the Board. The Board voted 2-1 to reverse the decision of the Zoning Commissioner and deny the variances requested by the Stil.

The Petitioner's noted a timely appeal. The following question was presented for this Court's review:

I. Whether the County Board of Appeals of Baltimore County ("Board") erred in denying the Petitioner's requested use variances in light of the absence of evidence supporting its conclusion that the denial would result in no practical difficulty to the Petitioner.

II. Whether the Board erred in deeming that the Petitioner's overwhelmingly successful operation of its business on the subject premises the wake of two failed businessess, and within unique constraints present at the

time of the purchase of the business, constitute a self- created hardship.

III. Whether the Board erred in concluding that the Petitioner brought a self-created hardship upon itself by leasing the subject premises with knowledge of the existing site constraints and parking conditions.

Based upon this Court's consideration of the entire record of the proceedings below, and its review of applicable law, this Court answers the above questions as follows: The Board did not err in, denying Petitioner's requested use variances, deeming that the Petitioner's decision to expand constituted a self-created hardship. Accordingly, the Court shall **AFFIRM** the decision of the Baltimore County Board of Appeals.

Scope of Review

A final decision of a county zoning board must be upheld on review if it is not premised upon an error of law and if the agency's conclusions reasonably may be based on the facts proven. The reviewing court cannot substitute its own judgment for that of the zoning board and must accept the zoning board's factual conclusions if they are based on substantial evidence and if reasoning minds could

reach the same conclusion on the record. *Columbia Road Citizens' Ass'n v. Montgomery County*, 98 Md. App. 695, 698 (1994).

For purposes of judicial review, substantial evidence means more than a "scintilla of evidence" such that a reasonable person could come to more than one conclusion in such a situation, the issue to be considered is "fairly debatable: and the reviewing court may not substitute its judgment for that of the agency. *Realty Improvement Ass'n v. Sycamore Realty Co., Inc.*, 105 Md. App. 701, 714, 661 A.2d 182 (1995).

Discussion

The Petitioner argues that the County Board of Appeals of Baltimore County ("Board") erred in denying the Petitioner's requested use variances in light of the absence of evidence supporting its conclusion that the denial would result in no practical difficulty to the Petitioner. In addition, the Petitioner argues that the Board erred in concluding that the Petitioner brought a self-created hardship upon itself by leasing property with knowledge of the site constraints and parking conditions and by creating a successful business on the property.

The first inquiry under Under BCZR 307.1 is whether the property is peculiar or "unique" so as to cause an unusual difficulty. If evidence of uniqueness is insufficient or unpersuasive, the inquiry ends there. *Cromwell v. Ward,* 102 Md. App. 691 (1995); *Umerly v. People's Counsel,* 108 Md. App. 497, cert. denied 342 Md. 584 (1996); *Riffin v. People's Counsel* 137 Md. App. 90 (2001). If this threshold is passed, a second inquiry is whetehr the unique condition results in a "practical difficulty" particular to the site. *Easter v. Mayor & City Council* 191 Md. 395 (1950).

The criteria in *McLean v. Soley,* 270 Md. 208, 214-15 (1973) relating to practical difficulty are:

1. Whether compliance with the strict letter of the restrictions governing area, set back, frontage, height, bulk or density would unreasonably prevent the owner from using the property for a permitted purpose or would render conformity with such restrictions unnecessarily burdensome.

2. Whether a grant of the variance applied for would do substantial justice to the applicant as well as to other property owners in the district, or whether a lesser relaxation than that applied for would give substantial relief to the owner of the property involved and be more consistent with justice to other property owners.

3. Whether relief can be granted in such fashion that the spirit of the ordinance will be observed and public safety and welfare secured. (Emphasis supplied).

Petitioner contends that subsequent to the commencement of its business on the premises, the Petitioner added several small additions to the premises, including a storage shed and an open patio. A roof was later added above the patio leaving the remaining area open to the air. Each of the additions was constructed without encroaching on the existing parking spaces. As a result of the additions, parking needs increased and the Petitioner added a number of parking spaces to the site, which were not in compliance with the Baltimore County Zoning Regulations ("BCZR"). On October 22, 2001, the Petitioner filed a Petition for Variance seeking a number of zoning variances.

The Zoning Commissioner of Baltimore County ("Zoning Commissioner") granted the requested variances by order dated March 7, 2002. The Greater Timonium Community Council ("GTCC") subsequently appealed that decision to the Board. The Board reversed the decision of the Zoning Commissioner and denied the variances requested by the Petitioner. The basis for the Board's decision was its finding that application of the governing provisions of the

BCZR would not result in practical difficulty to the Petitioner. *See Board of Appeals Decision at 16.*

The Majority in the Board's decision found that the existing parking does not deny or unreasonably prevent the owner from using the subject property for the permitted purpose of a restaurant nor does the present parking unduly render conformity with the current parking restrictions burdensome. *See Board of Appeals Decision at 16.*

The Board further stated that they cannot arbitrarily grant variances to restaurants that become extremely popular and experience parking problems.

Respondents argue that the County Council has enacted the area parking requirements. If they are inadequate in today's society with larger automobiles resulting in larger site requirements, the legislative body is equipped to handle such situations.

As mentioned, this reviewing court cannot substitute its own judgment for that of the Board and must accept factual conclusions if they are based on substantial evidence and if reasoning minds could reach the same conclusions on the record. *Columbia Road Citizens' Ass'n v. Montgomery County*, 98 Md. App. 695, 698, 635 A.2d 30 (1994). Even close, ambiguous, or issues involving an agency's particular expertise, requires a reviewing court

to respect an agency's holding. However, no such deference is given to an agency decision on pure questions of law beyond the weight merited by the presumptive force of the reasoning employed. *Friends of the Ridge v. Baltimore Gas & Electric Co.*, 120 Md. App. At 466.

Therefore, as part of its review, a reviewing court must determine whether an administrative agency made an error of law. *Baltimore Lutheran High School v. Employment Security Administration*, 302 Md. 649, 662, 449 A.2d 701 (1985). An agency decision is owed no deference when an error of law justifies a decision. *Belvoir Farms v. North* 355 Md. 259, 267 (1999). In particular, when a statute is unambiguous, administrative actions are not to be given weight if in error of law. This is because construction of law by an agency cannot override the plain meaning of a statute nor extend its provisions beyond the clear import of language employed. *Macke Co. v. Comptroller* 302 Md. 18 (1984) (citing *St. Dept. of A.&T. v. Greyhound Corp.*, 271 Md. 575, 589 (1974)). Statutory words cannot be isolated from its environment because plain language is governed by the context in which it appears thus necessitating that statutory interpretation advances applicable legislative policy. *Baltimore County Coalition Against Unfair Taxes v. Baltimore County*, 321 Md. 184, 203-04 (1990)(courts may

consider both the literal or usual meaning of statutory language, but also the meaning, effect, and context in light of the setting, objectives, and purpose of an enactment).

The Baltimore County Board of Appeals decision in this case is based on substantial evidence. In addition, this Court finds that the parking standards do not unreasonably prevent or hinder the use of the property for restaurant use, and that this case does not warrant the variances requested. This Court agrees with the Board's opinion explaining that property owners must recognize and respect the limitations of their properties. The property owner's inability to comply with zoning law for the purpose of a selected use does not justify a variance. Otherwise, a variance would have to be granted in every case, and the zoning laws would be rendered worthless.

For the reasons stated above, this Court finds that the Baltimore County Board of Appeals did not err in its determination. Accordingly, the Court shall **AFFIRM** the decision of the County Board of Appeals for entry of an order in accordance with this Court's ruling.

Conclusion

For the reasons set for the herein, the decision of the Baltimore County Board of Appeals shall be **AFFIRMED**

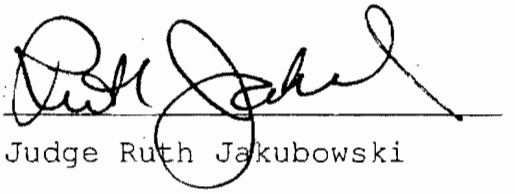

Judge Ruth Jakubowski

Date: 7/13/05

Copies to be
Mailed by Clerk to all parties

IN THE CIRCUIT COURT FOR BALTIMORE COUNTY
County Courts Building
401 Bosley Avenue
Towson, Maryland 21204
Telephone: 887-2628

In the Matter of Frieda G. Schaefer, et al.
Case No. 03-C-04-7824

ASSIGNMENT OF TRIAL OR HEARING DATE

Trial\Hearing upon **Open Issues (1 hour)** will be held on Wednesday, May 18, 2005, at 9:30 a.m. in Courtroom 17, Judge Ruth Jakubowski presiding.

By Order of the Circuit
Court for Baltimore County

Ruth Jakubowski
Judge

Date signed: March 31, 2005

Copies to:

Peter Max Zimmerman
People's Counsel for Balto. County

F. Vernon Boozer, Esq.
Bruce Covahey, Esq.

Louis Miller
County Board of Appeals

Civil Department
Central Assignment

RECEIVED
APR 1 - 2005
BALTIMORE COUNTY
BOARD OF APPEALS

NOTICE OF CIVIL TRACK ASSIGNMENT AND SCHEDULING ORDER

CIRCUIT COURT FOR BALTIMORE COUNTY
CIVIL ASSIGNMENT OFFICE
COUNTY COURTS BUILDING
401 BOSLEY AVENUE
P.O. BOX 6754
TOWSON, MARYLAND 21285-6754

County Board Of Appeals Of Baltimore County
Old Courthouse Room 49
400 Washington Avenue
Baltimore MD 21204

Assignment Date: 10/13/04

Case Title: In The Matter Of: Frieda G Schaefer, Et Al
Case No: 03-C-04-007824 AE

The above case has been assigned to the EXPEDITED APPEAL TRACK. Should you have any questions concerning your track assignment, please contact: Joy M Keller at (410) 887-3233.
You must notify this Coordinator within 15 days of the receipt of this Order as to any conflicts with the following dates:

SCHEDULING ORDER

1. Motions to Dismiss under MD. Rule 2-322(b) are due by..... 10/28/04
2. All Motions (excluding Motions in Limine) are due by..... 11/25/04
3. TRIAL DATE is..... 01/04/05
   Civil Non-Jury Trial; Start Time: 09:30AM; To Be Assigned; 1/2 HOUR ADMINISTRATIVE APPEAL

Honorable John Grason Turnbull II
Judge

Postponement Policy: No postponements of dates under this order will be approved except for undue hardship or emergency situations. All requests for postponement must be submitted in writing with a copy to all counsel/parties involved. All requests for postponement must be approved by the Judge.

Settlement Conference (Room 507): All counsel and their clients MUST attend the settlement conference in person. All insurance representatives MUST attend this conference in person as well. Failure to attend may result in sanctions by the Court. Settlement hearing dates may be continued by Settlement Judges as long as trial dates are not affected. (Call [410] 887-2920 for more information.)

Special Assistance Needs: If you, a party represented by you, or a witness to be called on behalf of that party need an accommodation under the Americans with Disabilities Act, please contact the Court Administrator's Office at (410) 887-2687 or use the Court's TDD line, (410) 887-3018, or the Voice/TDD M.D. Relay Service, (800) 735-2258.

Voluntary Dismissal: Per Md. Rule 2-506, after an answer or motion for summary judgment is filed, a plaintiff may dismiss an action without leave of court by filing a stipulation of dismissal signed by all parties who have appeared in the action. The stipulation shall be filed with the Clerk's Office. Also, unless otherwise provided by stipulation or order of court, the dismissing party is responsible for all costs of the action.

Court Costs: All court costs MUST be paid on the date of the settlement conference or trial.

cc: Greater Timonium Community Cou

RECEIVED
OCT 15 2004
BALTIMORE COUNTY
BOARD OF APPEALS

9/22/04

CIRCUIT COURT FOR BALTIMORE COUNTY
Suzanne Mensh
Clerk of the Circuit Court
County Courts Building
401 Bosley Avenue
P.O. Box 6754
Towson, MD 21285-6754
(410)-887-2601, TTY for Deaf: (800)-735-2258
Maryland Toll Free Number (800) 938-5802

N O T I C E O F R E C O R D

Case Number: 03-C-04-007824 AE
Administrative Agency : 02 165 A
C I V I L

In The Matter Of: Frieda G Schaefer, Et Al

Notice

Pursuant to Maryland Rule 7-206(e), you are advised that the Record of Proceedings was filed on the 22nd day of September, 2004.

Suzanne Mensh

Suzanne Mensh
Clerk of the Circuit Court, per_____

Date issued: 09/22/04

TO: COUNTY BOARD OF APPEALS OF BALTIMORE COUNTY
Old Courthouse Room 49
400 Washington Avenue
Baltimore, MD 21204

RECEIVED
SEP 24 2004
BALTIMORE COUNTY
BOARD OF APPEALS

FILED SEP 22 2004

9/20/04

PETITION OF:

BAD DOG CORP. T/A AN POINTIN STIL

CIVIL ACTION NO.: 3-C-04-7824

MATTER OF: BAD DOG CORP. T/A AN POINTIN STIL

RECEIVED FROM THE COUNTY BOARD OF APPEALS EXHIBITS AND THE BOARD'S RECORD EXTRACT AND TRANSCRIPT FILED IN THE ABOVE-ENTITLED CASE, AND ZONING COMMISSIONER'S FILE AND EXHIBITS.

CLERK'S OFFICE

DATE: September 20, 2004

IN THE CIRCUIT COURT *
FOR BALTIMORE COUNTY

*

PETITION OF:
BAD DOG CORP., t/a *
AN POINTIN STIL
2323 York Road *
Timonium, MD 21093

FOR JUDICIAL REVIEW OF THE OPINION OF * CIVIL ACTION
THE COUNTY BOARD OF APPEALS No. **3-C-04-7824**
OF BALTIMORE COUNTY *
OLD COURTHOUSE, ROOM 49
400 WASHINGTON AVENUE *
TOWSON, MARYLAND 21204

*

IN THE MATTER OF
FRIEDA G. SCHAEFER; BAD DOG CORP. *
t/a AN POINTIN STIL
2323 York Road *
Timonium, MD 21093

8th ELECTION DISTRICT *
3rd COUNCILMANIC DISTRICT

*

BOARD OF APPEALS CASE NO.: 02-165-A

RECEIVED AND FILED
2004 SEP 20 A 9:59
CLERK OF THE CIRCUIT COURT
BALTIMORE COUNTY

* * * * * * * * * * * *

PROCEEDINGS BEFORE THE ZONING COMMISSIONER AND THE BOARD OF APPEALS OF BALTIMORE COUNTY

TO THE HONORABLE, THE JUDGE OF SAID COURT:

And now comes the County Board of Appeals of Baltimore County and, in answer to the Petition for Judicial Review directed against it in this case, herewith transmits the record of proceedings had in the above-entitled matter, consisting of the original papers on file in the Department of Permits and Development Management and the Board of Appeals of Baltimore County:

ENTRIES FROM THE DOCKET OF THE BOARD OF APPEALS AND DEPARTMENT OF PERMITS AND DEVELOPMENT MANAGEMENT OF BALTIMORE COUNTY

No. 02-165-A

October 22, 2001	Petition for Variance filed by Frieda G. Schaefer, Legal Owner and Bad Dog Corporation, T/A An Pointin Stil, through their attorney F. Vernon Boozer, Esquire, requesting the following: 1. To allow the existing 97 parking spaces ilo 119 required 2. To allow standard angled parking spaces 8' ilo 8.5' req'd. 3. To allow parking aisle widths of 20 ft ilo 22 ft req'd 4. To allow 9' setback from parking to a street right-of-way ilo 10 ft. req'd 5. To allow 3% of parking lot to be internal island ilo 7% req'd 6. To allow parking islands 2.5 ft wide ilo 9 ft. req'd 7. To allow 6" setback parking-to building ilo 6' req'd 8. To allow a free-standing enterprise sign w/reader-board 9. To allow reader-board of 32SF ilo the required 50% (22.5SF)
December 10	Entry of Appearance filed by People's Counsel for Baltimore County
Not in File	Certificate of Posting.
December 14	Publication in newspaper
January 15, 2002	Publication in newspaper
February 15	ZAC Comments.
February 20	Hearing held before the Deputy Zoning Commissioner
March 7	Findings of Fact and Conclusions of Law issued by the Deputy Zoning Commissioner. Petition for Variance is GRANTED
March 27	Notice of Appeal filed by the Greater Timonium Community Council, Inc., by Eric Rockel, President, Louis W. Miller, Past President and Larry Towsend, Zoning Chair.
December 4, 2003	Hearing held before the Board of Appeals – Day #1
December 17	Hearing held before the Board of Appeals – Day #2
January 6, 2004	Hearing held before the Board of Appeals – Day #3

Petitioner's Exhibits

1A	Site Plan
1B	Site Plan
1C	Site Plan
2	GIS Map – 1 page – highlighted
3	Letter Agreement Regarding Parking and Other Matters dated September 30, 2002 to Dorsey Baldwin, Manager from Charles F. Evans, Jr. – 2 pages
4	Agreement Parking Spaces dated 12-01-03 signed by Dennis Foster, Jr. – 1 page
5	Baltimore County Zoning Regulations – PC Codebook for Windows – page 14 – 1 page
6A	Photograph
6B	Photograph

People's Counsel Exhibits

1	Aerial GIS Photograph
2	Sediment Control Plan
3	Letter dated November 13, 2001 from F. Vernon Boozer to Ms. Patricia M. Farr – consisting of 11 pages re: An Pointin Still Permit Application B456717
4	Permit Application Information B456717 – consisting of 10 pages
5	Comprehensive Map
6	ADC Map – 1 page
7	Maryland Department of Assessments and Taxation Baltimore County Real Property Data Search – 2323 York Road; consisting of 4 pages

8	Inter-Office Correspondence dated January 15, 2002 from Director, Office of Planning to Director, Department of Permits and Developmei Management – 2 pages re: 2323 York Road
9	§409 Off-Street Parking and Loading consisting of pages 4-29, 4-30, 4-31,4-32, 4-33, 4-34, 4-35, 4-36, 4-37, 4-38, 4-39, 4-40, 4-41, 4-42, 4-43, 4-44, 4-45 and 4-46
10	Rule 8 papers – Greater Timonium Community Council, Inc. – consisting of 4 pages
11A	Restaurant Schedule – 1 page
11B	Schedule of Land uses – highlighted – 4 pages
11C	Schedule of Land uses – highlighted – 7 pages
11D	Schedule of Land uses – highlighted – 3 pages
11E	Schedule of Land uses – highlighted – 7 pages
12	Schedule of Land Uses – not highlighted – 2 pages
13	Large Exhibit consisting of restaurant guide map with pegs of Timonium/Cockeysville Area, 11/30/03 - on white poster board – to be retained at the Board of Appeals
14	13 Photographs and 1 Description page of photographs – consisting of pages
15	Baltimore County Comprehensive Zoning Map – Final Log of Issues – Adopted October 10, 2000 – 3 pages

May 19, 2004	Board convened for Public Deliberation
July 2	Majority Opinion and Order issued by the Board of Appeals; Petition for Variance is DENIED.
July 27	Petition for Judicial Review filed in the Circuit Court for Baltimore County by F. Vernon Boozer, Esquire and Bruce Edward Covahey, Esquire, on behalf of Bad Dog Corp., t/a An Pointin Stil, Petitioner Civil Action No.: 3-C-04-7824

July 30	Copy of Petition for Judicial Review received from the Circuit Court for Baltimore County by the Board of Appeals.
August 2	Certificate of Notice sent to interested parties.
August 4	Amended Certificate of Notice sent to interested parties.
August 10	Transcript of testimony filed for January 6, 2004 by Susan A. Kambouris.
September 16	Transcript of testimony filed for December 4 and December 17, 2003 by Carolyn Peatt
September 20	Record of Proceedings filed in the Circuit Court for Baltimore County.

Record of Proceedings pursuant to which said Order was entered and upon which said Board acted are hereby forwarded to the Court, together with exhibits entered into evidence before the Board. However, People's Counsel's Exhibit No.: 13, which is of an unwieldy or bulky nature will be retained in the Board of Appeals office and upon request of the parties or the Court will be transmitted to the Court by whomever institutes the request.

Theresa R. Shelton

Theresa R. Shelton, Legal Secretary
County Board of Appeals, Room 49 Basement
Old Courthouse, 400 Washington Avenue
Towson, Maryland 21204 (410-887-3180)

c: People's Counsel for Baltimore County
F. Vernon Boozer, Esquire
Bruce E. Covahey, Esquire
Greater Timonium Community Council, Inc.
by: Louis W. Miller, President
Louis W. Miller, Individually

8/10/04

PETITION OF **BAD DOG CORPORATION, t/a AN POINTIN STIL** FOR JUDICIAL REVIEW OF THE DECISION OF THE COUNTY BOARD OF APPEALS OF BALTIMORE COUNTY	*	**IN THE** CIRCUIT COURT
IN THE CASE OF **BAD DOG CORPORATION, t/a AN POINTIN STIL,** LEGAL OWNERS FOR A PETITION FOR VARIANCE ON PROPERTY LOCATED AT 2323 YORK ROAD, E/S YORK ROAD, 82' SOUTH OF ROSE STREET	* * *	FOR
8TH Election District, 3rd Councilmanic District	*	BALTIMORE COUNTY
Case No. 02-165-A Before the County Board of Appeals	*	Case No. 03-C-04-7824

* *

RESPONSE TO PETITION FOR JUDICIAL REVIEW

GREATER TIMONIUM COMMUNITY COUNCIL, INC., and Louis W. Miller, in accordance with Maryland Rule 7-204, submits this response to the Petition for Judicial Review of BAD DOG CORPORATION, t/a AN POINTIN STIL, and states that they intend to participate in this action for Judicial Review. The undersigned participated in the proceeding before the County Board of Appeals.

GREATER TIMONIUM COMMUNITY COUNCIL, INC.
9b Ridgely Road, Box 276
Lutherville, Maryland, 21093

BY: Louis W. Miller, President

LOUIS W. MILLER
44 E. Timonium Rd.
Timonium, Md. 21093

Louis W. Miller
410-252-3444

CERTIFICATE OF SERVICE

I HEREBY CERTIFY that on the 10th day of August, 2004, a copy of the foregoing Response to Petition for Judicial Review was mailed to F. Vernon Boozer, Esquire, and Bruce Covahey, Esquire, Covahey & Boozer, P.A., 614 Bosley Avenue, Towson, MD. 21204, and Peter Max Zimmerman, People's Counsel for Baltimore County, 400 Washington Avenue, Room 45, Towson, Maryland 21204, and County Board of Appeals, 400 Washington Avenue, Room 49, Towson, Maryland 21204.

BY: Louis W. Miller, President
Greater Timonium Community Council, Inc.

COVAHEY & BOOZER, P. A.
ATTORNEYS AT LAW
614 BOSLEY AVENUE
TOWSON, MARYLAND 21204

410-828-9441

FAX 410-823-7530

EDWARD C. COVAHEY, JR.
F. VERNON BOOZER *
MARK S. DEVAN
THOMAS P. DORE
MICHAEL T. PATE
STACIE D. TRAGESER
BRUCE EDWARD COVAHEY
JENNIFER MATTHEWS HERRING

*ALSO ADMITTED TO D.C. BAR

ANNEX OFFICE
SUITE 302
606 BALTIMORE AVE.
TOWSON, MD 21204

August 10, 2004

RECEIVED
AUG 12 2004
BALTIMORE COUNTY
BOARD OF APPEALS

Theresa R. Shelton, Legal Secretary for
The County Board of Appeals of
Baltimore County
Old Courthouse, Room 49
400 Washington Avenue
Towson, MD 21204

Re: Circuit Court Civil Action No. 3-C-04-7824
Petition for Judicial Review
Bad DogCorp., t/a An Pointin Stil
2323 Timonium Road

Dear Ms. Shelton:

We are in receipt of your August 2, 2004 correspondence regarding the Petition for Judicial Review in the above-captioned matter.

With regard to the cost of the preparation of the transcript and any other documents, please contact us at your first convenience to discuss provisions for the payment of such cost.

Thank you for your anticipated courtesy and cooperation. We look forward to hearing from you shortly.

Very truly yours,

Bruce Edward Covahey

4/M with Lunch
VM (detailed message)

BEC/las
Cc: Drs. John & William Mitcherling (w/ enclosure)
0809LAS01

Greater Timonium Community Council, Inc.
9b Ridgely Road, Box 276
Lutherville, Md. 21093
BY: Louis W. Miller, President

And By: Louis W. Miller
44 E. Timonium Rd.
Timonium, Md. 21093
410-252-3444

August 9, 2004

Chief Clerk,
Civil Division
Circuit Court for Baltimore County
County Courts Building
401 Bosley Avenue
Towson, MD 21204

Re: Petition for Judicial Review of the Decision of the County Board of Appeals
In the matter of Bad Dog Corporation t/a An Pointin Stil
Case Number: 03-C-04-7824

Dear Sir or Madam:

Please file the enclose Response to Petition for Judicial Review. If you have any questions or concerns, please contact me at the address above.

Thank you for your consideration.

Very truly yours,

BY: Louis W. Miller, President
Greater Timonium Community Council, Inc.
(An umbrella group representing fifty one community and condo member associations)

AND BY: Louis W. Miller
44 E. Timonium Rd.
Timonium, Md. 21093

LWM
Enclosures

Cc: V. Vernon Boozer, Esquire
Bruce E. Covahey, Esquire
County Board of Appeals
People's Counsel For Baltimore County
GTCC, Inc. Executive Committee

File: GTCC Stil Cir. Ct. 8-04

RECEIVED
AUG 17 2004
BALTIMORE COUNTY
BOARD OF APPEALS

8/4/04

IN THE CIRCUIT COURT *
FOR BALTIMORE COUNTY
*
PETITION OF:
BAD DOG CORP., t/a *
AN POINTIN STIL
2323 York Road *
Timonium, MD 21093

FOR JUDICIAL REVIEW OF THE OPINION OF * CIVIL ACTION
THE COUNTY BOARD OF APPEALS No. **3-C-04-7824**
OF BALTIMORE COUNTY *
OLD COURTHOUSE, ROOM 49
400 WASHINGTON AVENUE *
TOWSON, MARYLAND 21204
*
IN THE MATTER OF
FRIEDA G. SCHAEFER; BAD DOG CORP. *
t/a AN POINTIN STIL
2323 York Road *
Timonium, MD 21093

8th ELECTION DISTRICT *
3rd COUNCILMANIC DISTRICT
*
BOARD OF APPEALS CASE NO.: 02-165-A

* * * * * * * * * * * *

AMENDED CERTIFICATE OF NOTICE

Madam Clerk:

Pursuant to the Provisions of Rule 7-202(d) of the *Maryland Rules*, the County Board of Appeals of Baltimore County has given notice by mail of the filing of the Petition for Judicial Review to the representative of every party to the proceeding before it TO INCLUDE ALL PREVIOUSLY NOTIFIED INDIVIDUALS (SEE ATTACHED EXHIBIT A) AND THE FOLLOWING INDIVIDUAL:

RECEIVED AND FILED
2004 AUG -4 P 12:03
CLERK OF THE CIRCUIT COURT
BALTIMORE COUNTY

Louis W. Miller, 44 E. Timonium Road, Timonium, MD 21093

A copy of said Amended Notice is attached hereto and prayed that it may be made a part hereof.

Theresa R. Shelton

Theresa R. Shelton, Legal Secretary
County Board of Appeals, Room 49
Old Courthouse, 400 Washington Avenue
Towson, MD 21204 (410-887-3180)

I HEREBY CERTIFY that a copy of the foregoing Certificate of Notice has been mailed to F. Vernon Boozer, Esquire, Covahey & Boozer, P.A., 614 Bosley Avenue, Towson, MD 21204; Bruce Edward Covahey, Esquire, Covahey & Boozer, P.A., 614 Bosley Avenue, Towson, MD 21204; John Mitcherling, Bad Dog Corp., 2323 York Road, Timonium, MD 21093; Frieda G. Schaefer, c/o MNS Dept 906, 10400 Fernwood Road, Bethesda, MD 20817; Alan Scott, DS Thaler & Associates, Inc., 7115 Ambassador Road, Baltimore, MD 21244; Larry Towsend, GTTC, 1111 Longbrook Road, Lutherville, MD 21093; Eric Rockel, President, GTTC, 9 B Ridgely Road, Timonium, MD 21093; Peter Max Zimmerman, People's Counsel for Baltimore County, Old Courthouse, Room 47, 400 Washington Avenue, Towson, Maryland 21204; Carole S. Demilio, Deputy People's Counsel for Baltimore County, Old Courthouse, Room 47, 400 Washington Avenue, Towson, Maryland 21204, and Louis W. Miller, 44 E. Timonium Road, Timonium, MD 21093, this 4th of August, 2004.

Theresa R. Shelton

Theresa R. Shelton, Legal Secretary
County Board of Appeals, Room 49
Old Courthouse, 400 Washington Avenue
Towson, MD 21204 (410-887-3180)

EXHIBIT "A"

IN THE CIRCUIT COURT *
FOR BALTIMORE COUNTY

*

PETITION OF:
BAD DOG CORP., t/a *
AN POINTIN STIL
2323 York Road *
Timonium, MD 21093

FOR JUDICIAL REVIEW OF THE OPINION OF * CIVIL ACTION
THE COUNTY BOARD OF APPEALS No. 3-C-04-7824
OF BALTIMORE COUNTY *
OLD COURTHOUSE, ROOM 49
400 WASHINGTON AVENUE *
TOWSON, MARYLAND 21204

*

IN THE MATTER OF
FRIEDA G. SCHAEFER; BAD DOG CORP. *
t/a AN POINTIN STIL
2323 York Road *
Timonium, MD 21093

8th ELECTION DISTRICT *
3rd COUNCILMANIC DISTRICT

*

BOARD OF APPEALS CASE NO.: 02-165-A

* * * * * * * * * * * *

CLERK OF THE CIRCUIT COURT
BALTIMORE COUNTY
2004 AUG 2 PM 2:29
RECEIVED AND FILED

CERTIFICATE OF NOTICE

Madam Clerk:

Pursuant to the Provisions of Rule 7-202(d) of the *Maryland Rules*, the County Board of Appeals of Baltimore County has given notice by mail of the filing of the Petition for Judicial Review to the representative of every party to the proceeding before it; namely:

F. Vernon Boozer, Esquire
Covahey & Boozer, P.A., 614 Bosley Avenue, Towson, MD 21204

Bruce Edward Covahey, Esquire
Covahey & Boozer, P.A., 614 Bosley Avenue, Towson, MD 21204

8/2/04

IN THE CIRCUIT COURT *
FOR BALTIMORE COUNTY
*
PETITION OF:
BAD DOG CORP., t/a *
AN POINTIN STIL
2323 York Road *
Timonium, MD .21093

FOR JUDICIAL REVIEW OF THE OPINION OF * CIVIL ACTION
THE COUNTY BOARD OF APPEALS No. **3-C-04-7824**
OF BALTIMORE COUNTY *
OLD COURTHOUSE, ROOM 49
400 WASHINGTON AVENUE *
TOWSON, MARYLAND 21204
*
IN THE MATTER OF
TRIEDA G. SCHAEFER; BAD DOG CORP. *
t/a AN POINTIN STIL
2323 York Road *
Timonium, MD 21093

8th ELECTION DISTRICT *
3rd COUNCILMANIC DISTRICT
*
BOARD OF APPEALS CASE NO.: 02-165-A

* * * * * * * * * * * *

2004 AUG 2 PM 2:29
RECEIVED AND FILED
CLERK OF THE CIRCUIT COURT
BALTIMORE COUNTY

CERTIFICATE OF NOTICE

Madam Clerk:

Pursuant to the Provisions of Rule 7-202(d) of the *Maryland Rules*, the County Board of Appeals of Baltimore County has given notice by mail of the filing of the Petition for Judicial Review to the representative of every party to the proceeding before it; namely:

F. Vernon Boozer, Esquire
Covahey & Boozer, P.A., 614 Bosley Avenue, Towson, MD 21204

Bruce Edward Covahey, Esquire
Covahey & Boozer, P.A., 614 Bosley Avenue, Towson, MD 21204

John Mitcherling
Bad Dog Corp., 2323 York Road, Timonium, MD 21093

Frieda G. Schaefer
c/o MNS Dept 906, 10400 Fernwood Road, Bethesda, MD 20817

Alan Scott
DS Thaler & Associates, Inc., 7115 Ambassador Road.
Baltimore, MD 21244

Larry Towsend
GTTC, 1111 Longbrook Road, Lutherville, MD 21093

Eric Rockel, President, GTTC
9 B Ridgely Road, Timonium, MD 21093

Peter Max Zimmerman
People's Counsel for Baltimore County, Old Courthouse, Room 47,
400 Washington Avenue, Towson, Maryland 21204

Carole S. Demilio
Deputy People's Counsel for Baltimore County, Old Courthouse, Room 47,
400 Washington Avenue, Towson, Maryland 21204

A copy of said Notice is attached hereto and prayed that it may be made a part hereof.

Theresa R. Shelton

Theresa R. Shelton, Legal Secretary
County Board of Appeals, Room 49
Old Courthouse, 400 Washington Avenue
Towson, MD 21204 (410-887-3180)

I HEREBY CERTIFY that a copy of the foregoing Certificate of Notice has been mailed to F. Vernon Boozer, Esquire, Covahey & Boozer, P.A., 614 Bosley Avenue, Towson, MD 21204; Bruce Edward Covahey, Esquire, Covahey & Boozer, P.A., 614 Bosley Avenue, Towson, MD 21204; John Mitcherling, Bad Dog Corp., 2323 York Road, Timonium, MD 21093; Frieda G. Schaefer, c/o MNS Dept 906, 10400 Fernwood Road, Bethesda, MD 20817; Alan Scott, DS Thaler & Associates, Inc., 7115 Ambassador Road, Baltimore, MD 21244; Larry Towsend, GTTC, 1111 Longbrook Road, Lutherville, MD 21093; (continued)

Certificate (continued)

Eric Rockel, President, GTTC, 9 B Ridgely Road, Timonium, MD 21093; ; Peter Max Zimmerman, People's Counsel for Baltimore County, Old Courthouse, Room 47, 400 Washington Avenue, Towson, Maryland 21204; Carole S. Demilio, Deputy People's Counsel for Baltimore County, Old Courthouse, Room 47, 400 Washington Avenue, Towson, Maryland 21204, this 2nd of August, 2004.

Theresa R. Shelton

Theresa R. Shelton, Legal Secretary
County Board of Appeals, Room 49
Old Courthouse, 400 Washington Avenue
Towson, MD 21204 (410-887-3180)

8/4/04

PETITION OF **BAD DOG CORPORATION, t/a AN POINTIN STILL**	*	IN THE
FOR JUDICIAL REVIEW OF THE DECISION OF THE COUNTY BOARD OF APPEALS	*	
OF BALTIMORE COUNTY	*	CIRCUIT COURT
IN THE CASE OF **BAD DOG CORPORATION, t/a AN POINTIN STILL,** LEGAL OWNERS FOR A	*	
PETITION FOR VARIANCE ON PROPERTY LOCATED	*	FOR
AT 2323 YORK ROAD. E/S YORK ROAD, 82' SOUTH OF ROSE STREET	*	
8th Election District, 3rd Councilmanic District	*	BALTIMORE COUNTY
Case No. 02-165-A Before the County Board of Appeals	*	Case No. 03-C-04-7824

* * * * * * * * * * * * * *

RESPONSE TO PETITION FOR JUDICIAL REVIEW

PEOPLE'S COUNSEL FOR BALTIMORE COUNTY, in accordance with Maryland Rule 7-204, submits this response to the Petition for Judicial Review BAD DOG CORPORATION, t/a AN POINTIN STIL, and states that it intends to participate in this action for Judicial Review. The undersigned participated in the proceeding before the County Board of Appeals.

PETER MAX ZIMMERMAN
People's Counsel for Baltimore County

CAROLE S. DEMILIO
Deputy People's Counsel
Old Courthouse, Room 47
400 Washington Avenue
Towson, MD 21204
(410) 887-2188

CERTIFICATE OF SERVICE

I HEREBY CERTIFY that on this 4th day of August, 2004, a copy of the foregoing Response to Petition for Judicial Review was mailed to F. Vernon Boozer, Esquire, and Bruce Covahey, Esquire, Covahey & Boozer, P.A., 614 Bosley Avenue, Towson, MD 21204 & Louis Miller, 44 E. Timonium Road, Timonium, MD 21093 and County Board of Appeals, 400 Washington Avenue, Room 49, Towson, Maryland 21204.

PETER MAX ZIMMERMAN
People's Counsel for Baltimore County

Baltimore County, Maryland

OFFICE OF PEOPLE'S COUNSEL

Room 47, Old CourtHouse
400 Washington Ave.
Towson, MD 21204

(410) 887-2188

PETER MAX ZIMMERMAN
People's Counsel

CAROLE S. DEMILIO
Deputy People's Counsel

August 4, 2004

Hand-delivered
Chief Clerk, Civil Division
Circuit Court for Baltimore County
County Courts Building
401 Bosley Avenue
Towson, MD 21204

RECEIVED
AUG 04 2004
BALTIMORE COUNTY
BOARD OF APPEALS

Re: Petition for Judicial Review of the Decision
of the County Board of Appeals
In the Matter of Bad Dog Corporation t/a An Pointin Stil
Case Number: 03-C-04-7824

Dear Sir or Madam:

Please file the enclosed please find the Response to Petition for Judicial Review. If you have any questions or concerns, please contact my office.

Thank you for your consideration.

Very truly yours,

Peter Max Zimmerman

Peter Max Zimmerman
People's Counsel for Baltimore County

PMZ/rmw
Enclosures

cc: F. Vernon Boozer, Esquire
Bruce E. Covahey, Esquire
Louis Miller
County Board of Appeals

County Board of Appeals of Baltimore County

OLD COURTHOUSE, ROOM 49
400 WASHINGTON AVENUE
TOWSON, MARYLAND 21204
410-887-3180
FAX: 410-887-3182

August 2, 2004

Peter Max Zimmerman
People's Counsel for Baltimore County
Old Courthouse, Room 47
400 Washington Avenue
Towson, Maryland 21204

RE: Circuit Court Civil Action No. 3-C-04-7824
Petition for Judicial Review
Bad DogCorp., t/a An Pointin Stil
2323 Timonium Road
Board of Appeals Case No.: 02-165-A

Dear Mr. Zimmerman:

Notice is hereby given, in accordance with the Maryland Rules, that a Petition for Judicial Review was filed on July 27, 2004 in the Circuit Court for Baltimore County from the decision of the County Board of Appeals rendered in the above matter. Any party wishing to oppose the petition must file a response within 30 days after the date of this letter, pursuant to the Maryland Rules.

Please note that any documents filed in this matter, including, but not limited to, any other Petition for Judicial Review, **must be filed under Civil Action No. 3-C-04-7824.**

Enclosed is a copy of the Certificate of Notice.

Very truly yours,

Theresa R. Shelton
Legal Secretary

/trs
Enclosure

c: F. Vernon Boozer, Esquire
Bruce Edward Covahey, Esquire
John Mitcherling
Frieda G. Schaefer
Alan Scott
Larry Towsend
Eric Rockel
Louis W. Miller

Printed with Soybean Ink
on Recycled Paper

County Board of Appeals of Baltimore County

OLD COURTHOUSE, ROOM 49
400 WASHINGTON AVENUE
TOWSON, MARYLAND 21204
410-887-3180
FAX: 410-887-3182

August 2, 2004

F. VERNON BOOZER, ESQUIRE
BRUCE EDWARD COVAHEY, ESQUIRE
COVAHEY & BOOZER, P.A.
614 BOSLEY AVENUE
TOWSON, MD 21204

RE: Circuit Court Civil Action No. 3-C-04-7824
Petition for Judicial Review
Bad DogCorp., t/a An Pointin Stil
2323 Timonium Road
Board of Appeals Case No.: 02-165-A

Dear Messrs. Boozer and Covahey:

In accordance with the Maryland Rules, the County Board of Appeals is required to submit the record of proceedings of the Petition for Judicial Review which you have taken to the Circuit Court for Baltimore County in the above-entitled matter within sixty days.

The cost of the transcript of the record must be paid by you. In addition, all costs incurred for certified copies of other documents necessary for the completion of the record must also be at your expense.

The cost of the transcript, plus any other documents, must be paid in time to transmit the same to the Circuit Court within sixty days, in accordance with the Maryland Rules.

Enclosed is a copy of the Certificate of Notice.

Very truly yours,

Theresa R. Shelton

Theresa R. Shelton
Legal Secretary

/trs
Enclosure
c: Peter Max Zimmerman / People's Counsel for Baltimore County
Eric Rockel, President, GTTC

Printed with Soybean Ink
on Recycled Paper

7/27/04

IN THE CIRCUIT COURT FOR BALTIMORE COUNTY

PETITION OF BAD DOG CORP., t/a AN POINTIN STIL 2323 YORK ROAD TIMONIUM, MD 21093	*	
FOR JUDICIAL REVIEW OF THE DECISION OF THE COUNTY BOARD OF APPEALS OF BALTIMORE COUNTY OLD COURTHOUSE, ROOM 49 400 WASHINGTON AVENUE TOWSON, MD 21204	*	CIVIL ACTION NO. C-04-7824
IN THE MATTER OF: FRIEDA G. SCHAEFER; BAD DOG CORP., t/a AN POINTIN STIL CASE NO. 02-165-A	*	

* * * * * * * * * * * * * * * *

PETITION FOR JUDICIAL REVIEW

NOW COMES Bad Dog Corp., t/a An Pointin Stil, Petitioner, by F. Vernon Boozer, Bruce Edward Covahey and Covahey & Boozer, P.A., its attorneys, pursuant to Maryland Rule 7-202, and files this Petition for Judicial Review, and in support thereof states:

1. That the Petitioner, Bad Dog Corp., t/a An Pointin Stil, hereby requests judicial review of the Opinion and Order issued by County Board of Appeals of Baltimore County in this matter on July 2, 2004.

2. That the Petitioner was a party to the proceeding before the County Board of Appeals of Baltimore County.

F. VERNON BOOZER

BRUCE EDWARD COVAHEY
Covahey & Boozer, P.A.
614 Bosley Avenue
Towson, Maryland 21204
(410) 828-9441
Attorneys for Petitioner

gab040717

COVAHEY & BOOZER, P. A.
ATTORNEYS AT LAW
614 BOSLEY AVENUE
TOWSON, MARYLAND 21204

410-828-9441

FAX 410-823-7530

EDWARD C. COVAHEY, JR.
F. VERNON BOOZER *
MARK S. DEVAN
THOMAS P. DORE
MICHAEL T. PATE
STACIE D. TRAGESER
BRUCE EDWARD COVAHEY
JENNIFER MATTHEWS HERRING

*ALSO ADMITTED TO D.C. BAR

ANNEX OFFICE
SUITE 302
606 BALTIMORE AVE.
TOWSON, MD 21204

July 27, 2004

Hand Delivered

Clerk, Circuit Court for Baltimore County
401 Bosley Avenue
Towson, MD 21204

RECEIVED
JUL 27 2004
BALTIMORE COUNTY
BOARD OF APPEALS

RE: In the Matter of Frieda G. Schaefer;
Bad Dog Corp., t/a An Poitin Stil
Case No. 02-165-A

Dear Sir/Madam:

Enclosed please find Petition for Judicial Review to be filed in connection with the above captioned matter, together with check in the amount of $115.00 for costs of same.

Thank you for your attention to the above. If you have any questions, do not hesitate to contact my office.

Very truly yours,

Bruce Edward Covahey

BRUCE EDWARD COVAHEY

Enclosures
cc: Baltimore County Board of Appeals
An Poitin Stil
0727gab01

IN THE MATTER OF THE APPLICATION OF FRIEDA G. SCHAEFER; BAD DOG CORP. t/a AN POINTIN STIL - PETITIONERS FOR VARIANCES ON PROPERTY LOCATED ON THE E/S YORK ROAD, 82' S OF ROSE STREET (2323 YORK ROAD) 8TH ELECTION DISTRICT 3RD COUNCILMANIC DISTRICT	* BEFORE THE * COUNTY BOARD OF APPEALS * OF * BALTIMORE COUNTY * CASE NO. 02-165-A

* * * * * * * * *

OPINION

This case involves an appeal from a decision rendered by the Zoning Commissioner under date of March 2, 2002 in which a Petition for a Variance was granted in part and dismissed in part without prejudice by the Zoning Commissioner. The case had originally been set in for August 13, 2003 before this Board; and postponed at the request of Counsel for the Petitioner, without objection by the Protestants or People's Counsel, as confirmed by the Board with a representative of each party, pending attempted settlement negotiations. The case was subsequently rescheduled for December 4, 2003 and due notice given to all parties involved.

In attendance were Vernon F. Boozer, Esquire, representing the Petitioner; Peter M. Zimmerman, People's Counsel for Baltimore County; and Louis W. Miller, representing the Greater Timonium Community Council, Inc. C. William Clark, Esquire, was also in attendance for a separate case (Case No. 02-533-SPHA) involving the same business entity, but "a separate matter...a separate parcel of property." Mr. Clark simply wanted to gauge how the scheduled case was going to progress. Opening statements were offered by Mr. Boozer and Mr. Zimmerman.

Petitioner is seeking relief from the *Baltimore County Zoning Regulations* (BCZR) as follows:

Section 409.6.2 to allow the existing 97 parking spaces in lieu of 119 spaces required;

Section 409.3 to allow standard angled parking spaces as 8 feet wide in lieu of the

required 8.5 feet;

Section 409.4.C to allow parking aisles of 20 feet in lieu of the 22 feet required;

Section 409.8.A.4 to allow a nine-foot setback from parking to a street right-of-way in lieu of the 10 feet required.

In addition, the Petitioners have requested relief from § 409.8.A.1 of the BCZR and from the Baltimore County Landscape Manual, as follows:

Part III.B.2.a to allow 3% of the parking lot to be internal islands in lieu of 7% required;

Part III.B.2.c to allow parking islands 2.5 feet wide in lieu of the 9 feet required; and

Part III.B.2.d to allow 6-inch setback parking to building in lieu of 6 feet required.

The Petitioner had also requested relief from § 450.7.B.1 to allow a freestanding enterprise sign with a noncontiguous reader border in addition to a variance from § 450.7.B.2 to allow a reader board with 71.1% (32 sq. ft. per face) in lieu of the required 50% (22.5 sq. ft. per face) of an erected permitted enterprise sign; and finally "any other variances deemed necessary by the Zoning Commissioner."

At this public hearing, the Petitioner decided to withdraw their request relative to the freestanding enterprise sign; and the "reader border" sign as indicated above, so that the only variances being considered by the Board were those involving the actual parking request.

Alan Scoll testified on behalf of the Petitioner. He is a registered landscape architect and has appeared before the Board on numerous occasions. He was readily accepted as an expert in

that field. Mr. Scoll testified at length using Petitioner's Exhibit No. 1 (a site plan) as he spoke. He opined that the request for the variance was a result that was not a condition that the present owners of the restaurant had brought upon themselves. To demonstrate that point, he used a G.I.S. informative photo grammetry shot in 1996, which reflected the site and the parking lot configuration established at that time. The total acreage involved on the property was about 1.8 acres. When the present owners took over the property, there existed no buffer. The buffer was given as an easement by the present owner to Baltimore County in order to satisfy the Baltimore County Department of Environmental Protection and Resource Management concerns that, at some time in the future, someone might wish to come back and expand toward an existing stream that runs through the property. It was Mr. Scoll's opinion that this was a unique site due to its triangular shape, the stream flowing through the property, and the area on which an easement was granted to Baltimore County to insure that there would be no further extension of the existing parking lot. Due to the peculiar shape, stream, and environmental constraints, "there is no opportunity for further expansion on the property." [T 12/04/03, p 32] The G.I.S. information confirmed that the present lot configuration was already existing in 1996, along with the main building itself.

Subsequently, the new owners added a storage building in the rear of the that building was used for service and receipt of supplies and equipment for the restaurant. This, Mr. Scoll explained, permitted deliveries due on the off hours so as not to intrude into the regular Petitioner's lot area during peak periods. In addition, a 500 sq. ft. facility had been constructed on the north side of the building in the current footprint as it existed when the present owners took over the property. Mr. Scoll indicated that the sign variance had been withdrawn, with a

modified site plan reflecting the requested parking variances. The purpose of the variances that had been requested was to "clean up" what was already there [T 12/04/03, p 23] The "curb" variances came about when the property was surveyed; and it was determined that the curb was 9 feet off the right-of-way instead of the 10 feet off the right-of-way.

The witness acknowledged the many efforts that the new owners had undertaken to make the restaurant a very popular spot, and, because of the popularity, "the current leaseholders are victims of their own success." [page 24] The sum total of the variance request was to correct a situation that was pre-existing when the current owners purchased the property. Mr. Scoll, opined that, according to his calculations, the Petitioner was only a few parking spots short of what was needed to satisfy the zoning request and is from a technical point of view. [pages 26-27] He also related efforts made by the Petitioner to acquire additional off-site parking. [page 27-29] He again stated factually why he considered the property to be unique, that is, its triangular shape, the stream flowing through it, and the buffer easement that was granted to Baltimore County. [T, page 31-32] The difficulty resulted from a "thriving business" that contributed to "the health of the York Road corridor" and without the variance relief the owner "would have no option but to leave the site." [page 32] Mr. Scoll did not believe there was any detriment to the community. Petitioner's Exhibit #2 was introduced as the 1996 GIS information.

Mr. Zimmerman questioned the witness relative to People's Counsel Exhibit #1, a large colored GIS map, copied in the year 2000. The issue of the site was probed and indicated that Bob's Big Boy Timonium and a diner had actually occupied the site now owned by the Petitioner. He indicated that DEPRM had expressed concern that parking had been added along the north side of the building and had concerns that the area that originally was to be undisturbed

had been reduced, which led them to negotiations between the owner of the property and the DEPRM staff.

People's Counsel Exhibit #3 was introduced as a letter from Mr. Boozer's office to Pat Farr of DEPRM, and additional correspondence from Ms. Farr to Mr. Boozer. Mr. Scoll was familiar with the correspondence exchanged. In view of the disturbance and redevelop of the parking area, DEPRM requested that the current border be added to the buffer area and that the Petitioner "dedicate or give an easement to the County ceding a buffer area." It was Mr. Scoll's contention that the buffer was created to make sure that there would be no additional encroachments or improvements in the stream area or what they would like to have as a buffer. Mr. Scoll opined that DEPRM had a permit request for a 500 sq. ft. addition in front of them and that "what they wanted to get out of approving that permit was a recorded buffer." [p 46] DEPRM, upon investigation, had found, "in fact, that there had been some encroachment into the original buffer area, and that led to this whole series of communications and the resolution that you describe as subsequently occurring." [page 46] Mr. Scoll opined that "in any event, a resolution was reached which makes the current configuration acceptable, and there is an agreement to plant trees in the buffer easement that was granted to Baltimore County." [pages 47-48] The essence of the agreement was that "it really just limited any additional encroachment, construction, on the north side." [page 48]

Mr. Scoll was questioned by Mr. Zimmerman concerning three separate requests for permits. The first was a July 17, 2001 application which involved an addition on the north side of the building; a permit related to a storage building located in the back of the restaurant; and a permit related to a patio area. The three permits were admitted as People's Counsel Exhibit #4.

Mr. Scoll indicated that the square footage on the north side addition was 500 sq. ft. The square footage of the storage building on the east side was about 250 to 255 feet. Mr. Scoll explained to the Board the modifications that were made to go from 97 parking spaces to a larger number. Mr. Scoll's remarks are found on page 53 through page 64 of the transcript.

After the lunch break, Mr. Scoll indicated that the existing one-story building, including the patio, was actually 6,986 sq. ft. as opposed to the 7,139 sq. ft. shown on the site plan and explained the difference. [page 91-92]

Dorsey Nelson Baldwin was the next witness called. He is a stockholder in the "Bad Dog Corp." t/a An Pointin Stil. He opined that he has been an owner since its inception and described the remarkable growth and popularity of the restaurant. He also explained how the restaurant handled special events and overflow parking conditions by using nearby facilities and, at times, special buses to bring patrons from a distant location to the restaurant. Mr. Baldwin described how the restaurant had attempted to serve the community in general and was not aware of any neighborhood concerns or complaints relative to their parking arrangements. He also described efforts to reconcile differences with the Greater Timonium Community Council along with efforts to procure neighboring properties to alleviate the parking problems [page 103-104] The arrangements with the Evans Funeral Home was introduced as Petitioner's Exhibit #3, as well as other neighboring firms. He indicated that their many efforts did not satisfy the Greater Timonium Community Council. He described the shed which was used for the storage of beer/wine and a portion for storage. He indicated that when the restaurant had opened in September 1999 he had attempted to negotiate the purchase of the property immediately adjacent to the restaurant and the asking price was excessive so that those negotiations were not fruitful.

That, in turn, led the restaurant to negotiate a parking arrangement with the Evans Funeral Home in proximity to the restaurant (agreement dated September 30, 2003. He related attempts to utilize parking at a property owned by Dennis Forest (Petitioner's Exhibit #4).

On cross-examination by Mr. Zimmerman, Mr. Baldwin indicated that he was a very active partner in the business and he was retired from McCormick and Co., having been with that organization for 33 ½ years and he discussed his arrangements with the Evans Funeral Home in which the restaurant paid to the funeral home $250.00 a month in exchange for 15 spaces for the restaurant employees. That agreement could be terminated by either side on 15 days written notice. Discussed was another property, the O'brechts property known as "Road Net," which is part of United Parcel Service. He indicated that there was an oral arrangement with the UPS corporate headquarters to use their parking. He indicated that, subsequent to their oral agreement, UPS built a fence around their property and they had left open a space about 50 feet from the restaurant, perhaps 100 feet, where customers could come, parking their car, and then walk around. [page 124] Discussed was the verbal agreement with Dr. Forest, reduced to writing under date of December 1, 2003, just three days prior to the hearing, although the Petitioner had an agreement with him for 4 years. [p 127] It was silent as to whether there is any agreement on a time period for termination. That site would require the patrons to cross York Road. He described how, when the restaurant was purchased on April 1, 1999, the management actually went over to Ireland, brought furniture back and brought two 40,000 lb. containers from Ireland to Timonium to make the restaurant a very authentic place, and it opened on September 28, 1999. To make the restaurant as authentic as possible, the management tore up the floors in the restaurant clubhouse diner, leaving four walls up, and then began building anew. With regard to

the patio, there was a serving area with chairs and tables that was basically used during the warm weather months of May until October. He indicated that the square footage of the patio was approximately 760 sq. ft. and that a permit had been obtained recently to put a roof on top. He also described the shed, indicating that there were two floors with storage on both floors, assuming that 255 represents one floor and then probably 255 would represent the second floor also, they would be both on each floor (page 120).

On further cross-examination by Mr. Miller, questions were raised relative to the zoning on the various sites which are currently being used for off-site parking, and Mr. Miller introduced the 2000 Comprehensive Zoning Map (People's Counsel Exhibit #5). Controversy arose relative to what constituted a "cellar." Section 101 of the BCZR was brought into interpretation. This ended the close of the Petitioner's case (page 140).

Mr. Zimmerman called as his first witness Mr. John Lewis. Mr. Lewis works in the Department of Permits and Development Management, Zoning Review Section, as a Planner II. He has been in this position since 1990 and was originally hired by the County into that office in 1986. Mr. Lewis opined that he had considerable experience relative to zoning petitions and dealing with the implementation of *Baltimore County Zoning Regulations*, permits, zoning hearings, etc. Petitions for such filings basically are all reviewed by Planners II. The parking issues are a standard review item which his department has to consider whenever reviewing a plan for acceptance. He had not reviewed the Petition in question; it had been reviewed by Mr. Jeff Perlow of the Department. However, he was familiar with it. A question addressed to Mr. Lewis was, did the definition of gross floor area or floor area gross refer to facilities used exclusively for storage or upon which were situated necessary heating or air conditioning

equipment, etc. He indicated that § 101 was the guiding factor. That definition included the definition of a "cellar" within the zoning regulations and actually a cellar is deeper than a basement. He indicated that the definition of a basement under § 101 was "that portion of the building below the first floor, the floor which is less than ½ of the height of the room below, the average grade of the adjoining ground"; the definition of a cellar was "that portion of the building below the first floor, the floor which is more than ½ of the height of the room below the average grade of the adjoining ground....So we have a basement which is less than ½ of the depth of the room below the average grade and a cellar which is more." [page 143] He indicated that the difference between a basement and a cellar was that "the depth of the room itself below the average grade. A basement is less than ½ of that depth. Both of them, of course, are below the first floor line. The basement is less than ½ the depth of the basement room below the average grade. A cellar is more than ½ the depth...below the average grade." [page 144]

Upon further questioning, Mr. Lewis was posed the question by Mr. Zimmerman that "to make a long story short, with an above-ground storage area, that is, an area where the floor is level with the first floor of the building, does your office consider that a basement or cellar?" Mr. Lewis indicated that, "No, that would fall within the defined area required to be established, the gross floor area for parking." He related § 409.7, the location of parking that is not on site.

The case continued with public hearings conducted on December 17, 2003, the next witness being Mr. Louis Miller, who supplied Rule 8 papers relative to his representation with the The Greater Timonium Community Council. Objections were raised by Mr. Boozer as to the acceptability of the Rule 8 papers; however, after argument and discussion, the Chairman determined that the Board would "take Mr. Miller's testimony in and give it whatever weight the

individual panel members deemed to give it at time of public deliberation," noting the objection for the record (T 12/17/03, page 10 and 11). Mr. Miller indicated his activity as a private citizen in many land issues involving the Timonium area, that he had lived in Timonium at his current address since 1956 when Timonium Road East was not present. His basic concerns were that "I do not feel that the property is unique in this particular case. There was and still is a stream on the north corner of this property and this property backs up to a hill. The reservation that was placed since the 1988 map was to protect the stream area that is still there. Mr. Miller opined that the Petitioner had purchased the property in 1999 and was aware of the property's limitations, and they leased the property at their own risk. [T 12/17/03, p 13] From that standpoint, it appears to me that the property is not unique." In spite of the previously existing restaurants on the property in the form of Bob's Big Boy and the Clubhouse Diner, to his knowledge, there were no parking variances. Mr. Miller had prepared a detailed list and exhibits relative to other restaurants in the York Road corridor. As an exhibit for the Board along with a summary sheet. Mr. Zimmerman suggested that Exhibit 11A be the summary. Mr. Boozer objected to the submission of the exhibit. Information was submitted by Mr. Miller relative to information secured from the Maryland Department of Assessments to the listing of other restaurants compared to by Mr. Miller, Mr. Miller again stressed that "the uniqueness of that property was already known to the owners of the restaurant when they purchased it." [page 29]

The Board reminded both attorneys that the Board was talking about a particular restaurant and whether it is unique, unusual, or different within the context of the various cases, *Cromwell v. Ward*, and in that it was basically a judgmental decision on the part of the Board. Mr. Miller's comparisons were interesting, but ultimately the Board would be the one to decide,

on the issues of this particular location. Mr. Miller cited the three additions to the property from the time that it was leased, including the patio placed on the south side approximately 250 to 300 sq. ft. and the additional 600 sq. ft. north side property where another building had been built.

A considerable amount of discussion relative to the actual number of parking spaces that were being requested is documented in the transcript. The main objection by the Timonium Community Council was that the present owners knew when they leased the property that it was not the square footage that it is today; that the present owners have added a patio, storage area. When they requested the many variances, the Greater Timonium Community Council simply took the position that "you cannot overload the property and then ask for variances," which prompted the community appeal [page 54] Eric Rockel, a member of the GTCC, testified as an individual citizen. He indicated that he worked in the Real Estate Office of Baltimore County but was also the Vice President of the Greater Timonium Community Council and he was familiar with the Stil restaurant and the variances being requested. His concerns basically were that the Stil was a very successful restaurant and, with that success, the parking lot has been overburdened. In addition, the residential community on the other side of York Road was being used as a parking place for patrons and that it was a dangerous situation for such patrons to cross York Road in the evening hours. Mr. Rockel indicated that he had seen numerous persons on the side streets but could not say with any definitiveness that they had actually parked their cars in the residential areas in question.

Mr. Boozer recalled Mr. Scoll who reviewed Mr. Miller's computations as documented in the transcript, pages 67 through 83. The last day of public hearing was conducted on January 6, 2004. At that time, both counsel had an opportunity to present in brief "bullet" form argument

since the Board did not request official written Briefs being submitted. Mr. Boozer, Mr. Zimmerman and Mr. Miller were all given the opportunity to express their respective viewpoints to the Board before public deliberation.

The Board members have carefully reviewed the testimony and evidence presented at the public hearings, along with the documentary evidence submitted by the respective parties. Because Lawrence Stahl replaced Melissa Moyer Adams, who resigned from the Board prior to the public deliberation in this matter, it was necessary for the Board to have prepared a complete transcript of the entire proceedings for Mr. Stahl's review, as well as its being available for the other two Board members. In addition, in lieu of oral closing argument, the Board requested a "bullet" type digest reflecting each party's position relative to the requested variances.

The Board held a public deliberation on May 19, 2004.

The Board may grant a request for variance from area regulations "where special circumstances or conditions exist that are peculiar to the land...and where strict compliance with the *Baltimore County Zoning Regulations* would result in practical difficulty or unreasonable hardship..." [*Baltimore County Zoning Regulations*, § 307.] Under the law, a variance from such regulations is considered to be an "area" variance, the general impact of which is considered to be less drastic than that of a "use" variance.

The Board has for guidance in such matters case law as stated in *Cromwell v. Ward*, 102 Md.App. 691 (1995), which requires a determination by the Board as to whether or not there is any "uniqueness" in the subject property; and if the Petitioner can initially establish that criteria, it is necessary to move forward relative to the second requirement as to "practical difficulty," always keeping in mind that if a variance is granted it constitutes a use that is prohibited and

presumed to be in conflict with the local ordinance established by the County Council. In *North v. St. Mary's County*, 99 Md.App. 502 (1994), the Court held that "...the 'unique' aspect of a variance requirement does not refer to the extent of improvements on the property, or upon neighboring property. 'Uniqueness' of a property for zoning purposes requires that the subject property have an inherent characteristic not shared by other properties in the area; i.e., its shape, topography, subsurface condition, environmental factors, historical significance, access or non-access to navigable waters, practical restrictions imposed by abutting properties (such as obstructions) or other similar restrictions. In respect to structures, it would relate to such characteristics as unusual architectural aspects and bearing or party walls."

The question before the Board, therefore, is whether the subject property is "unique, unusual, or different" that satisfies the requirements of the *Cromwell* and *North* cases previously cited. The Board clearly concludes that the subject site meets these requirements. Based upon the expert testimony of Alan Scoll, a registered Landscape Architect in the State of Maryland, his testimony and accompanying evidentiary documentation, there is no doubt in the Board's analysis that the subject property is "peculiar to the land" and unique in accordance with the dictates of the *Cromwell* case.

The 1996 G.I.S. information photo grammerty shot in 1996 reflects the pre-existing site, the current owners took over, by lease, in 1999, which clearly shows the site in its current configuration [T 12/04/03, p 19] Mr. Scoll described the commercial property as a "rather unique site. It's very oddly configured at a triangular shape...a stream flows through the property...the owners put that area in easement and granted the easement to Baltimore County...there are not a lot of streams running through the properties...this leaves about one acre

of land for this use." [page 20-21] The existing building itself was established when the present owners took possession subsequent to 1996.

Mr. Scoll repeated his assertion that the property was unique as stated at pages 31-32 of the transcript:

> A. Well, the property has an odd configuration with the triangular shape to it. The narrow end of the triangle is restricted now because of a stream that is there, and in order to get some permits for improvements to the building, we had to prepare a buffer study and prepare a set of exhibits for Baltimore County to record an easement over approximately one-third of the property.
>
> So the environmental constraints are significant. There is no opportunity for further expansion on the property.
>
> The owners are working with an existing configuration. It is an unusual layout for parking that they were given, and the reason that that layout is unusual is because of the peculiar constraints on this particular piece of property.

The Board as a finder of fact has determined that Mr. Scoll's testimony, as an expert, was convincing along with the documentation presented to conclude that "uniqueness" exists as to this particular site.

Having determined that uniqueness exists as to the subject site, the Board is required to determine the "practical difficulty" aspect.

As to practical difficulty, because a variance from parking regulations is deemed to be an "area" variance, the impact of which is viewed as being much less drastic than that of a "use" variance, the petitioning party needs only to show practical difficulty, the lesser standard of proof, to be entitled to relief. *McLean v. Soley*, 270 Md. 208, 213-214, 310 A.2d 783 (1973) Additionally, in *Anderson v. the Board of Appeals*, 22 Md.App. 28, 39, 322 A.2d 220 (1994), the Maryland Court of Appeals established a criteria for determining what constitutes "practical difficulty."

1) whether strict compliance with requirement would unreasonably prevent the use of the property for a permitted purpose or render conformance unnecessarily burdensome;

2) whether the grant would do substantial injustice to applicant as well as other property owners in the district or whether a lesser relaxation than that applied for would give substantial relief; and

3) whether relief can be granted in such fashion that the spirit of the ordinance will be observed and public safety and welfare secured.

Anderson v. Bd. of Appeals, Town of Chesapeake Beach, 22 Md. App. 28 (1974).

As to the practical difficulty issue, a majority of this Board concurred that practical difficulty did not exist. Mr. Crizer did not agree and will prepare a minority dissent expressing his views.

Mr. Scoll's primary thrust as to the practical difficulty issue was as follows:

> Well, the practical difficulty is fairly obvious. Working with an existing layout for parking, the existing building, the current leaseholders have developed a thriving business, which is an excellent neighbor, contributes, I think, significantly to the health of the York Road business corridor.
>
> It's attractively done, very well managed and very well maintained, and they have no place else to go without the relief that's been requested. They would have no option but to leave the site.
>
> Q. In your opinion, do you feel that there would be any detriment that would result to the surrounding neighborhood if the Board were to grant this request?
>
> A. I believe that there would be no detriment to the surrounding neighborhood. There would be no additional impact as a result of the relief that is being requested.
>
> As I mentioned before, these folks are good neighbors. They do a good job of maintaining their property. And I think they have strived in every imaginable respect to try to manage their business and provide for adequate parking to support their business.

Mr. Scoll also discussed possible alternatives in the event the Board denied the request of the Petitioners.

1. A reconfiguring of some of the positions of the parking, which the

Petitioner had already undertaken…in realty a minimized request for relief at this time.

2. To attempt to cooperate with their neighbors in utilizing available space near their property, whether or not there is technically sufficient parking; for instance, on the funeral home site, as long as it works, and they can make it work on an unofficial level.
3. Use of the Thelma Street parking area that they have proposed, subject to a subsequent hearing, on the other side of York Road – but close to the existing particular site. [page 33-34]

In Mr. Scoll's opinion, those suggestions would be in harmony with the *Baltimore County Zoning Regulations.*

The Board has considered the requirements established in *Anderson v. Board of Appeals* cited previously. The Majority does not find that the existing parking either denies or "unreasonably prevents the owner from using the subject property for the permitted purpose of a restaurant – nor that the present parking unduly renders conformity with the current parking restrictions unreasonably burdensome."

The testimony is quite clear that the present owners took over a pre-existing site in 1999, which the County's G.I.S. information photogrammetry reflects the site in its present configuration [page 19] The present owners had full knowledge that the building and parking lot configuration were already established in 1996 – prior to the present owners taking over of the lease in 1999 [page 19]. They were fully aware of the fact that two other restaurants had occupied the site, with the same parking constraints (Bob's Big Boy Restaurant and the

Clubhouse Diner). To Mr. Scoll's knowledge, they had not requested any parking variances.

Mr. Scoll acknowledged that, after the present owners took over the site on April 6, 1999, extensive work had been done on the main buildings – the place had been gutted, the owners went to Ireland and brought back two 40,000 pound containers to "make it an authentic place" that opened on September 28, 1999.

Because of the site constraints, Petitioners Exhibit 4 reflects a permit dated August 23, 1999 relative to patio construction that has become a "serving area." [page 117] Additionally, a storage shed was constructed, two stories in height, about 255 sq. ft [p 119] on each floor [page 120]. These were erected because "the place was a success, and we needed more space." [page 121]

At the time the present owners took over the site, additional parking had been added along the north side of the parking lot, which intruded into an area that originally was to be left undisturbed, that led to discussions between the owners of the restaurant and the County's DEPRM staff and ultimately creation of the buffer.

While the Board is sympathetic to the plight of the Petitioners, their predicament is one caused by too much success, without foresight as to exactly how popular the restaurant would become and the existing constraints on the property due to its limited size.

The Petitioners were well aware of the prospect of the restaurant's success and extremely limited acreage of the site. There had already been an intrusion into areas before their purchase that a survey, which they did not undertake, would have readily revealed. Because of the intrusion, an additional easement had to be granted to Baltimore County representing over 1/3 of the property.

It is undisputed that there are environmental constraints that do not permit further expansion on the property. The Board must conclude that the restaurant owners did not exercise proper discretion when purchasing the property without adequate consideration of the site's limitations and pre-existing intrusion into areas not to be disturbed. While it has been alleged that the restaurant may have to be relocated, representations, as previously recited, have been made that the restaurant owners could pursue other avenues to gain additional parking off site.

The Board cannot arbitrarily grant variances to restaurants that become extremely popular and experience parking problems. That is the price of success, and must be taken into consideration when entering into a lease or purchase of a selected site. Because of the intrusion, a series of negotiations between the current owners and DEPRM resulted in a resolution when the Department accepted the current boundary to the buffer area and, at the same time, the Petitioners granted an easement to the County and dedicated a buffer area. [page 44]

Mr. Scoll acknowledged that the site had not been surveyed when the present owners acquired the site. It was only when he examined the property that it was determined that the layout "was already substandard as to parking" [page 61] and that the problem had gone unrecognized when the two prior restaurants were there.

The County Council has enacted the area parking requirements. If they are inadequate in today's society with larger automobiles resulting in larger site requirements, the legislative body is equipped to handle such situations. For this Board to grant such variances as requested would not be in keeping with other restaurants that suffer under similar constraints. The Board would encourage the Petitioners to seek other off-site parking in permitted areas, with appropriate written authority by the consenting property owners.

For the reasons enunciated, the Board must deny the variances requested and will so order.

ORDER

THEREFORE, IT IS THIS 2nd day of July, 2004 by the County Board of Appeals of Baltimore County

ORDERED that the Petitioners' request for variance from § 409.6.2 to allow the existing 97 parking spaces in lieu of 119 spaces required; from § **409.3** to allow standard angled parking spaces as 8 feet wide in lieu of the required 8.5 feet; from § 409.4.C to allow parking aisles of 20 feet in lieu of the 22 feet required; from § 409.8.A.4 to allow a nine-foot setback from parking to a street right-of-way in lieu of the 10 feet required; requested from § 409.8A.1 of the BCZR and from Baltimore County Landscape Manual, Part III.B.2.a to allow 3% of the parking lot to be internal islands in lieu of 7% required; Part III.B.2.c to allow parking islands 2.5 feet wide in lieu of the 9 feet required; and Part III.B.2.d to allow 6-inch setback parking to building in lieu of 6 feet required be and the same is hereby **DENIED**; and it is further

ORDERED that Petitioners' requested variance relief relative to the freestanding enterprise sign and the "reader border," having been withdrawn at public hearing, be and the same is **DISMISSED** as moot.

Any petition for judicial review from this decision must be made in accordance with Rule 7-201 through Rule 7-210 of the *Maryland Rules*.

COUNTY BOARD OF APPEALS
OF BALTIMORE COUNTY

Charles L. Marks, Panel Chairman

Lawrence M. Stahl

7/2/04

IN THE MATTER OF THE APPLICATION OF FRIEDA G. SCHAEFER; BAD DOG CORP. t/a AN POINTIN STIL - PETITIONERS FOR VARIANCES ON PROPERTY LOCATED ON THE E/S YORK ROAD, 82' S OF ROSE STREET (2323 YORK ROAD) 8TH ELECTION DISTRICT 3RD COUNCILMANIC DISTRICT	* BEFORE THE * COUNTY BOARD OF APPEALS * OF * BALTIMORE COUNTY * CASE NO. 02-165-A

* * * * * * * * *

OPINION

This Board Member respectfully dissents from the Majority Opinion and Order issued on the part of the practical difficulty in this matter. This case comes before the Baltimore County Board of Appeals on an appeal from a decision that granted relief by the Zoning Commissioner. This is a visibly prosperous business that is seeking variance relief due to a declaration of protective covenants, conditions and restrictions required by Baltimore County and dated November 1, 2003. This buffer zone that was created by the Department of Environmental Protection and Resource Management (DEPRM) removed .68 acre of land from the tenants. I agree with the Zoning Commissioner's findings which are summed up on page 4, 1st and 2nd paragraphs:

> In this case, I am easily persuaded that the property is unique. Admittedly, that is frequently a difficult task. However in this case, the configuration and environmental constraints associated with this property justify such a finding. The existing stream and buffer area clearly limit development potential and provide limited area for parking and an unusual parking layout. I easily find that the subject property is unique and that those factors necessitate variance relief. Moreover, I find that the Petitioners would suffer a practical difficulty if relief were denied. The use is permitted by right and is a vibrant commercial operation. To jeopardize that operation would be inappropriate. Finally, there was no testimony or evidence presented that the current parking arrangement causes any detrimental impacts on the surrounding locale. There was no testimony from Messrs. Miller or Townsend to that effect, and Dr. Mitcherling emphasized the good relationship the business has with its neighbors.
>
> For all of these reasons I am persuaded to grant the Petition for Variance. The existing 97 parking spaces in lieu of the 119 required is all that can be provided on this site. It is also to be noted that the 11 spaces that are less than the required 8.5 feet in width should be permitted to remain. To require removal of

those spaces would reduce parking and be inappropriate. Third, the reduced aisle widths occur only in a portion of the site and do not appear to adversely impact traffic flow or circulation on the property. Fourth, photographs were submitted at the hearing which show that the property is landscaped. The building and the site are one of the more attractive properties along this stretch of York Road. The 9-foot strip along the front of the property is sufficient to provide adequate landscaping. A slight variance of 1-foot here is warranted. To require the full 10 feet would be unreasonable and further crowd the parking lot. Finally, the variances as they relate to the internal islands and parking lot to building setback are appropriate. Again, these are driven by the unique characteristics of the property.

Mr. Alan Scoll, who was accepted as an expert witness in Landscape Architecture makes reference to the commercial property being unique in shape to the Timonium area. [Trans. 12/04/03, pp 20 and 21] He further stated a buffer was created by DEPRM within the last year which "in itself is something of a unique constraint." This action, in my opinion, does not make this hardship self-inflicted. Mr. Scoll was quite convincing in his testimony that led me to believe this property was unique and that practical difficulty would result in the form of economical hardship, and there will be no detrimental impact to adjacent properties. Mr. Scoll further states in his testimony [Trans. 12/04/03, p 32] that practical difficulty would arise without a variance because they would have no option but to leave the site.

It is the conclusion of this dissenting Board member that the Petitioner met all three parts of the Court of Special Appeals decision of *Cromwell v. Ward*, 102 Md.App. 691 (1995). I believe the variances being requested are not out of order and are reasonable enough to keep a successful business that seems to be a mindful neighbor in the York Road Business Corridor. To that extent, this Member respectfully dissents.

Edward W. Crizer, Jr.

DATE: July 2, 2004

County Board of Appeals of Baltimore County

OLD COURTHOUSE, ROOM 49
400 WASHINGTON AVENUE
TOWSON, MARYLAND 21204
410-887-3180
FAX: 410-887-3182

July 2, 2004

Mr. Louis W. Miller
The Greater Timonium Community Council, Inc.
44 E. Timonium Road
Timonium, MD 21093

RE: *In the Matter of: Frieda G. Schaefer; Bad Dog Corp. t/a An Pointin Stil* - Petitioners
Case No. 02-165-A

Dear Mr. Miller:

Enclosed please find a copy of the Majority Opinion and Order issued this date by the County Board of Appeals of Baltimore County in the subject matter. Also enclosed is a copy of Mr. Crizer's dissenting opinion.

Any petition for judicial review from this decision must be made in accordance with Rule 7-201 through Rule 7-210 of the *Maryland Rules*, **with a photocopy provided to this office concurrent with filing in Circuit Court. Please note that all subsequent Petitions for Judicial Review filed from this decision should be noted under the same civil action number as the first Petition.** If no such petition is filed within 30 days from the date of the enclosed Order, the subject file will be closed.

Very truly yours,

Kathleen C. Bianco /trs

Kathleen C. Bianco
Administrator

Enclosure

c: Eric Rockel /GTCC
Larry Towsend /GTCC
F. Vernon Boozer, Esquire
John Mitcherling /Bad Dog Corporation
Frieda G. Schaefer c/o MNS Department 906
Alan Scoll /D.S. Thaler & Associates, Inc.
Office of People's Counsel
Pat Keller, Planning Director
Lawrence E. Schmidt, Zoning Commissioner
Timothy M. Kotroco, Director /PDM

Printed with Soybean Ink
on Recycled Paper

Case No. 02-165-A

VAR – Parking spaces /width, setbacks, islands. (Variance relief for freestanding sign /reader board withdrawn by Petitioner prior to ZC hearing; dismissed without prejudice.)

3/07/2002 –Z.C.'s decision in which variance relief as to parking was GRANTED; as to signs /withdrawn by Petitioner at start of ZC hearing; dismissed without prejudice.

4/23/02 – Letter from Commissioner Schmidt to Alan Scoll, D.S. THALER & ASSOC. – re: letter from Mr. Scoll dated 4/18/02 with attachment (amended plan) forwarded to Board of Appeals; ZC no longer has jurisdiction over this matter; has been appealed to the Board. Material included in file.

9/06/02 –Notice of Assignment sent to following; assigned for hearing on Wednesday, December 18, 2002 at 10:00 a.m.:

Greater Timonium Community Council, Inc.
by Eric Rockel, President
Louis W. Miller, Past President, GTCC
Larry Towsend, Zoning Chairman, GTCC
F. Vernon Boozer, Esquire
John Mitcherling /Bad Dog Corporation
Frieda G. Schaefer c/o MNS Department 906
Alan Scott /D.S. Thaler & Associates, Inc.
Office of People's Counsel
Pat Keller, Planning Director
Lawrence E. Schmidt, Zoning Commissioner
Arnold Jablon, Director /PDM

12/18/02 – Board convened for hearing (Wescott, Irish, Adams); postponement requested by parties and granted on the record; possible settlement; reassigned for hearing to April 2003 date in the event settlement not possible. Should settlement occur before that date, hearing will be pulled when the appeal is dismissed or resolution put on record.

-- Notice of PP and Reassignment sent to parties; reassigned to Wednesday, April 16, 2003 at 10:00 a.m.

3/20/03 – Letter of postponement filed by F. Vernon Boozer, Esquire – requests postponement of 4/16/03 hearing; settlement negotiations progressing; need additional time; indicates no objection by Protestants confirmed this date by T/C to Mr. Larry Towsend, Zoning Chair, GTCC; Mr. Boozer advised of grant of same and reassignment to late summer date.

-- Second Notice of PP and Reassignment sent to parties this date; reassigned to Wednesday, August 13, 2003 if needed for hearing in this matter.

3/28/03 – Letter from F. Vernon Boozer – requesting that Case No. 02-533-SPHA be assigned for hearing on same date as this matter. No objection to request per conversation with P Zimmerman 3/28/03.

4/02/03 – Notice of Assignment sent to parties for Case No. 02-533-SPHA; to be heard with this matter.

7/25/03 – Letter dated 7/24/03 received from F. Vernon Boozer, Esquire – requesting postponement of 8/13/03 hearing – parties are continuing in negotiations; both parties are in agreement to this request. Also postponement of 02-533-SPHA scheduled for same date.

-- Conversation with P. Zimmerman this date; he has no objection to this PP request being granted.

7/28/03 – Second Notice of PP and Reassignment prepared; case to be postponed to Thursday, December 4, 2003, at 10:00 a.m. (will confirm this postponement with representative of GTCC prior to mailing).

12/04/03 – Board convened for hearing (Marks, Adams, Crizer); concluded day #1; assigned for 12/17/03 at 11 a.m. for conclusion of hearing; notice to be sent.

12/09/03 – Notice of Assignment /Day #2 sent to parties; assigned for Wednesday, December 17, 2003 at 11 a.m.
FYI copy to 5-6-7

12/17/03 – Board convened for day #2 (Marks, Adams, Crizer); concluded evidence /testimony; will reconvene on Tuesday, January 6, 2004 at 9:30 a.m. for closing argument.

12/19/03 – T/C to Mr. Boozer and conversation with Mr. Zimmerman regarding later time for this matter (a previously scheduled 10 a.m. development plan appeal conflicts with Circuit Court schedule of counsel for protestants /appellants in that case; earlier time needed on 1/06/04 for development plan hearing). Both Messrs. Boozer and Zimmerman have agreed to present closing argument at 10:00 a.m. on 1/06/04.
- Notice of Assignment /Day #3 sent to parties; assigned for closing argument on Tuesday, January 6, 2004 at 10:30 a.m. FYI copy to 5-6-7.

1/06/04 – Board convened for closing oral argument (in lieu of filing written briefs) (5-6-7); deliberation to be assigned for 2/10/04 at 9:15 a.m.; notice to be sent.

1/09/04 – Notice of Deliberation sent to parties; assigned for Tuesday, February 10, 2004 at 9:15 a.m. FYI copy to 5-6-7.

1/27/04 – T/C from John Moyer re Melissa Moyer Adams – Ms. Adams will be unavailable to sit on the Board for 10 days due to illness; all cases scheduled through 2/06/04 were reviewed for postponement and /or substitution if possible.

2/03/04 – T/C from John Moyer re Melissa Moyer Adams – she will be unavailable through at least 2/10/04; therefore, the deliberation assigned for this date must be postponed. Notice to be sent to all parties.

2/05/04 – Notice of Postponement and Reassignment of Deliberation sent to parties; reassigned to Thursday, March 11, 2004 at 9:00 a.m.
-- T/C to Messrs Boozer and Miller regarding this postponement; advised People's Counsel of change in date.

3/02/04 – Due to the resignation of M. Adams, L. Stahl will step in and replace Melissa in this matter; to read transcripts of three days of testimony /argument in this matter and to review file and all related materials. In order to allow time for the transcript to be prepared and for Mr. Stahl to review same, a Second Notice of PP and Reassignment was sent this date to all parties as listed; to be reassigned to Wednesday, May 19, 2004 at 9:00 a.m.

5/19/04 – Board convened for public deliberation; denied variance request. Opinion to be issued no later than 6/30/04 (Mr. Marks leaving Board); appellate period to run from date of written Order. (c)

BOARD OF APPEALS OF BALTIMORE COUNTY

MINUTES OF DELIBERATION

IN THE MATTER OF: Bad Dog Corp., T/A An Pointin Stil
Case No.: 02-165-A

DATE: May 19, 2004

BOARD/PANEL:

Charles L. Marks	CLM
Edward W. Crizer, Jr.	EWC
Lawrence M. Stahl	LMS

RECORDED BY: Theresa R. Shelton / Legal Secretary

PURPOSE: To deliberate the Petition for Variance filed requesting the following:

1. To allow the existing 97 parking spaces ilo 119 required
2. To allow standard angled parking spaces 8' ilo 8.5' req'd.
3. To allow parking aisle widths of 20 ft ilo 22 ft req'd
4. To allow 9' setback from parking to a street right-of-way ilo 10 ft. req'd
5. To allow 3% of parking lot to be internal island ilo 7% req'd
6. To allow parking islands 2.5 ft wide ilo 9 ft. req'd
7. To allow 6" setback parking-to building ilo 6' req'd
8. To allow a free-standing enterprise sign w/reader-board
9. To allow reader-board of 32SF ilo the required 50% (22.5SF)

PANEL MEMBERS DISCUSSED THE FOLLOWING:

Sign Variance

- Request for sign variance (#8/9) withdrawn

Parking Variance

- Parking variance left to deliberate. Burden of proof is on the Petitioner.
- Uniqueness: is lot unique? the lot is unique enough to satisfy Cromwell vs. Ward.
- Buffer makes property unique and the triangular shape makes property unique, take a triangular shape and then add the buffer and it makes the property even odder
- All members in agreement that property (land) is unique

Practical Difficulty

- Success – is that self-created
- Owners aware of parking situation when entered into lease
- Variance is to give relief – is there a practical difficulty – yes – can not conform to regulations
- Parking could have been added prior to 1998 at buffer area – now have lost that acreage due to the buffer imposed by Baltimore County

- Variances are given very sparingly
- Restaurant expanded – is it self-inflicted? How does that impact future cases? Does every business in the future that is successful and expanding get variances?
- Petitioners have tried to obtain other parking to accommodate the situation
- Modified parking plan according to §409.12b(c)
- Overflow parking questionable
- What is consequence if variance not granted
- If restaurant remains popular people will continue to park off-site
- The property was limited by the buffer imposed by Baltimore County after the purchase.
- The business did not know that the acreage would be taken away.

DECISIONS BY BOARD MEMBERS:

Charles L. Marks	CLM	DENY the Variance
Edward W. Crizer, Jr.	EWC	GRANT the Variance
Lawrence M. Stahl	LMS	DENY the Variance

FINAL DECISION: Majority Decision by the Board of appeal that the variance relief requested by the Petitioners is DENIED.

NOTE: These minutes, which will become part of the case file, are intended to indicate for the record that a public deliberation took place that date regarding this matter. The Board's final decision and the facts and findings thereto will be set out in the written Opinion and Order to be issued by this Board.

Respectfully submitted,

Theresa R. Shelton

Theresa R. Shelton
County Board of Appeals

County Board of Appeals of Baltimore County

OLD COURTHOUSE, ROOM 49
400 WASHINGTON AVENUE
TOWSON, MARYLAND 21204
410-887-3180
FAX: 410-887-3182

March 2, 2004

SECOND NOTICE OF POSTPONEMENT
AND REASSIGNMENT OF DELIBERATION

IN THE MATTER OF:

BAD DOG CORP. T/A AN POINTIN STIL
Case No-02-165-A

which was reassigned for deliberation on 3/11/04 due to illness of a Board member has been **POSTPONED** and reassigned a new date due to the resignation of Ms. Adams from the Board; this matter (heard on 12/04/03; 12/17/03; and 1/06/04) has been reassigned to the following date and time, a third panel member having been assigned to this panel:

DATE AND TIME : **WEDNESDAY, MAY 19, 2004 at 9:00 a.m.**

LOCATION : **Hearing Room 48, Basement, Old Courthouse**

NOTE: ALL PUBLIC DELIBERATIONS ARE OPEN SESSIONS; HOWEVER, ATTENDANCE IS NOT REQUIRED. A WRITTEN OPINION /ORDER WILL BE ISSUED BY THE BOARD AND A COPY SENT TO ALL PARTIES.

Kathleen C. Bianco
Administrator

c: Appellants /Protestants : Greater Timonium Community Council, Inc.
by Eric Rockel, President
Louis W. Miller, Past President, GTCC
Larry Towsend, Zoning Chairman, GTCC

Counsel for Petitioners : F. Vernon Boozer, Esquire
Petitioners : John Mitcherling /Bad Dog Corporation
Frieda G. Schaefer c/o MNS Department 906

Alan Scott /D.S. Thaler & Associates, Inc.

Office of People's Counsel
Pat Keller, Planning Director
Lawrence E. Schmidt, Zoning Commissioner
Timothy M. Kotroco, Director /PDM

FYI: 5-7-2

Printed with Soybean Ink
on Recycled Paper

County Board of Appeals of Baltimore County

OLD COURTHOUSE, ROOM 49
400 WASHINGTON AVENUE
TOWSON, MARYLAND 21204
410-887-3180
FAX: 410-887-3182

pp'd
3/19/04

February 5, 2004

NOTICE OF POSTPONEMENT
AND REASSIGNMENT OF DELIBERATION

IN THE MATTER OF:

BAD DOG CORP. T/A AN POINTIN STIL
Case No-02-165-A

which was assigned for deliberation on 2/10/04 has been **POSTPONED** due to illness of a Board member and reassigned to the following date /time (heard on 12/04/03; 12/17/03; and 1/06/04):

DATE AND TIME : **THURSDAY, MARCH 11, 2004 at 9:00 a.m.**

LOCATION : **Hearing Room 48, Basement, Old Courthouse**

NOTE: ALL PUBLIC DELIBERATIONS ARE OPEN SESSIONS; HOWEVER, ATTENDANCE IS NOT REQUIRED. A WRITTEN OPINION /ORDER WILL BE ISSUED BY THE BOARD AND A COPY SENT TO ALL PARTIES.

Kathleen C. Bianco
Administrator

c: Appellants /Protestants : Greater Timonium Community Council, Inc.
by Eric Rockel, President
Louis W. Miller, Past President, GTCC
Larry Towsend, Zoning Chairman, GTCC

Counsel for Petitioners : F. Vernon Boozer, Esquire
Petitioners : John Mitcherling /Bad Dog Corporation
Frieda G. Schaefer c/o MNS Department 906

Alan Scott /D.S. Thaler & Associates, Inc.

Office of People's Counsel
Pat Keller, Planning Director
Lawrence E. Schmidt, Zoning Commissioner
Timothy M. Kotroco, Director /PDM

FYI: 5-7-6

Printed with Soybean Ink
on Recycled Paper

County Board of Appeals of Baltimore County

OLD COURTHOUSE, ROOM 49
400 WASHINGTON AVENUE
TOWSON, MARYLAND 21204
410-887-3180
FAX: 410-887-3182

pp'd to 3/11/04 - due to illness (6)

January 9, 2004

NOTICE OF DELIBERATION

IN THE MATTER OF:

BAD DOG CORP. T/A AN POINTIN STIL
Case No-02-165-A

Having heard this matter over three days of public hearing (12/04/03; 12/17/03; and 1/06/04), public deliberation has been scheduled for the following date /time:

DATE AND TIME : TUESDAY, FEBRUARY 10, 2004 at 9:15 a.m.

LOCATION : Hearing Room 48, Basement, Old Courthouse

NOTE: ALL PUBLIC DELIBERATIONS ARE OPEN SESSIONS; HOWEVER, ATTENDANCE IS NOT REQUIRED. A WRITTEN OPINION /ORDER WILL BE ISSUED BY THE BOARD AND A COPY SENT TO ALL PARTIES.

Kathleen C. Bianco
Administrator

c: Appellants /Protestants : Greater Timonium Community Council, Inc.
by Eric Rockel, President
Louis W. Miller, Past President, GTCC
Larry Towsend, Zoning Chairman, GTCC

Counsel for Petitioners : F. Vernon Boozer, Esquire
Petitioners : John Mitcherling /Bad Dog Corporation
Frieda G. Schaefer c/o MNS Department 906

Alan Scott /D.S. Thaler & Associates, Inc.

Office of People's Counsel
Pat Keller, Planning Director
Lawrence E. Schmidt, Zoning Commissioner
Timothy M. Kotroco, Director /PDM

FYI: 5-7-6

Printed with Soybean Ink
on Recycled Paper

County Board of Appeals of Baltimore County

OLD COURTHOUSE, ROOM 49
400 WASHINGTON AVENUE
TOWSON, MARYLAND 21204
410-887-3180
FAX: 410-887-3182

Hearing Room – Room 48

Old Courthouse, 400 Washington Avenue

December 19, 2003

NOTICE OF ASSIGNMENT /Day #3
(Closing Argument)

CASE #: 02-165-A

IN THE MATTER OF: ***Frieda G. Schaefer – Legal Owner; Bad Dog Corp., t/a An Pointin Stil – C.P. /Petitioner*** 2323 York Road
8th Election District; 3rd Councilmanic District

Day #3 from 12/17/03

3/07/02 – Petition for Variance GRANTED in part and dismissed in part without prejudice by Zoning Commissioner.

ASSIGNED FOR: **TUESDAY, JANUARY 6, 2004 at 10 a,.m.**

Please note that cooperation of counsel in permitting this matter to be scheduled for 10 a.m. in lieu of the earlier time agreed upon is greatly appreciated.

NOTICE: **This appeal is an evidentiary hearing; therefore, parties should consider the advisability of retaining an attorney.**

Please refer to the Board's Rules of Practice & Procedure, Appendix C, Baltimore County Code.

IMPORTANT: No postponements will be granted without sufficient reasons; said requests must be in writing and in compliance with Rule 2(b) of the Board's Rules. No postponements will be granted within 15 days of scheduled hearing date unless in full compliance with Rule 2(c).

If you have a disability requiring special accommodations, please contact this office at least one week prior to hearing date.

Kathleen C. Bianco
Administrator

---

c: Appellants /Protestants : Greater Timonium Community Council, Inc.
by Eric Rockel, President
Louis W. Miller, Past President, GTCC
Larry Towsend, Zoning Chairman, GTCC

Counsel for Petitioners : F. Vernon Boozer, Esquire
Petitioners : John Mitcherling /Bad Dog Corporation
Frieda G. Schaefer c/o MNS Department 906

Alan Scott /D.S. Thaler & Associates, Inc.

Office of People's Counsel
Pat Keller, Planning Director
Lawrence E. Schmidt, Zoning Commissioner
Timothy M. Kotroco, Director /PDM

Printed with Soybean Ink on Recycled Paper

County Board of Appeals of Baltimore County

OLD COURTHOUSE, ROOM 49
400 WASHINGTON AVENUE
TOWSON, MARYLAND 21204
410-887-3180
FAX: 410-887-3182

Hearing Room – Room 48

Old Courthouse, 400 Washington Avenue

December 9, 2003

NOTICE OF ASSIGNMENT /Day #2

CASE #: 02-165-A

IN THE MATTER OF: ***Frieda G. Schaefer – Legal Owner; Bad Dog Corp., t/a An Pointin Stil – C.P. /Petitioner*** 2323 York Road
8th Election District; 3rd Councilmanic District

Day #2 from 12/04/03

3/07/02 – Petition for Variance GRANTED in part and dismissed in part without prejudice by Zoning Commissioner.

ASSIGNED FOR: **WEDNESDAY, DECEMBER 17, 2003 at 11:00 a.m.**

NOTICE: **This appeal is an evidentiary hearing; therefore, parties should consider the advisability of retaining an attorney.**

Please refer to the Board's Rules of Practice & Procedure, Appendix C, Baltimore County Code.

IMPORTANT: No postponements will be granted without sufficient reasons; said requests must be in writing and in compliance with Rule 2(b) of the Board's Rules. No postponements will be granted within 15 days of scheduled hearing date unless in full compliance with Rule 2(c).

If you have a disability requiring special accommodations, please contact this office at least one week prior to hearing date.

Kathleen C. Bianco
Administrator

---

c: Appellants /Protestants : Greater Timonium Community Council, Inc.
by Eric Rockel, President
Louis W. Miller, Past President, GTCC
Larry Towsend, Zoning Chairman, GTCC

Counsel for Petitioners : F. Vernon Boozer, Esquire
Petitioners : John Mitcherling /Bad Dog Corporation
Frieda G. Schaefer c/o MNS Department 906

Alan Scott /D.S. Thaler & Associates, Inc.

Office of People's Counsel
Pat Keller, Planning Director
Lawrence E. Schmidt, Zoning Commissioner
Timothy M. Kotroco, Director /PDM

Printed with Soybean Ink
on Recycled Paper

Agreement Parking Spaces
Dr. Dennis Foster Jr. and An Poitin Stil
December 1, 2003

I, Dennis Foster Jr., agree to lease thirteen parking spaces at 2340 York Rd Timonium, MD 21093 to An Poitin Stil for 200 dollars a month. The lease will be from 5pm until 3am. The lessee agrees to keep the property free and clear of all debris. The term of the lease is for five years.

Dennis Foster Jr. 12-01-03
(Lessor)

John Hetherling 12-01-03
Agent for An Poitin Stil
(Lessee)

County Board of Appeals of Baltimore County

OLD COURTHOUSE, ROOM 49
400 WASHINGTON AVENUE
TOWSON, MARYLAND 21204
410-887-3180
FAX: 410-887-3182

Hearing Room – Room 48
Old Courthouse, 400 Washington Avenue

July 28, 2003

THIRD NOTICE OF POSTPONEMENT & REASSIGNMENT

CASE #: 02-165-A

IN THE MATTER OF: *Frieda G. Schaefer – Legal Owner; Bad Dog Corp., t/a An Pointin Stil – C.P. /Petitioner* 2323 York Road
8th Election District; 3rd Councilmanic District

(Scheduled same day as: 02-533-SPHA)

3/07/02 – Petition for Variance GRANTED in part and dismissed in part without prejudice by Zoning Commissioner.

which had been reassigned for hearing on 8/13/03 has been postponed at the request of Counsel for Petitioner, without objection by Appellants /Protestants and People's Counsel, as confirmed with a representative of each party, pending settlement negotiations, and reassigned a date for hearing as needed; and has been

REASSIGNED FOR: **THURSDAY, DECEMBER 4, 2003 at 10:00 a.m.**

NOTICE: **This appeal is an evidentiary hearing; therefore, parties should consider the advisability of retaining an attorney.**

Please refer to the Board's Rules of Practice & Procedure, Appendix C, Baltimore County Code.

IMPORTANT: No postponements will be granted without sufficient reasons; said requests must be in writing and in compliance with Rule 2(b) of the Board's Rules. No postponements will be granted within 15 days of scheduled hearing date unless in full compliance with Rule 2(c).

If you have a disability requiring special accommodations, please contact this office at least one week prior to hearing date.

Kathleen C. Bianco
Administrator

---

c: Appellants /Protestants : Greater Timonium Community Council, Inc.
by Eric Rockel, President
Louis W. Miller, Past President, GTCC
Larry Towsend, Zoning Chairman, GTCC

Counsel for Petitioners : F. Vernon Boozer, Esquire
Petitioners : John Mitcherling /Bad Dog Corporation
Frieda G. Schaefer c/o MNS Department 906

Alan Scott /D.S. Thaler & Associates, Inc.

Office of People's Counsel
Pat Keller, Planning Director
Lawrence E. Schmidt, Zoning Commissioner
Timothy M. Kotroco, Director /PDM

Printed with Soybean Ink on Recycled Paper

COVAHEY & BOOZER, P. A.
ATTORNEYS AT LAW
614 BOSLEY AVENUE
TOWSON, MARYLAND 21204

410-828-9441

FAX 410-823-7530

EDWARD C. COVAHEY, JR.
F. VERNON BOOZER *
MARK S. DEVAN
THOMAS P. DORE
MICHAEL T. PATE
STACIE D. TRAGESER
BRUCE EDWARD COVAHEY
JENNIFER MATTHEWS HERRING

*ALSO ADMITTED TO D.C. BAR

ANNEX OFFICE
SUITE 302
606 BALTIMORE AVE.
TOWSON, MD 21204

July 24, 2003

Kathleen C. Bianco, Administrator
County Board of Appeals of Baltimore County
Old Courthouse, Room 49
400 Washington Avenue
Towson, MD 21204

RE: In the Matter of Frieda G. Schaefer
Bad Dog Corp., t/a An Poitin Stil
2323 York Road
Case No. 02-165-A and Case No. 02-533-SPHA
Hearing - 8/13/03, 10:00 am

Dear Ms. Bianco:

The parties are continuing to negotiate this matter and we would like to request a continuance of the hearing date. I understand both parties are in agreement.

Your attention and cooperation in this matter is greatly appreciated.

Very truly yours,

F. VERNON BOOZER

cc: Office of the People's Counsel
Greater Timonium Community Council, Inc.
Mr. Alan E. Scoll, D.S. Thaler & Assoc., Inc.
0724gab02

RECEIVED
JUL 25 2003
BALTIMORE COUNTY
BOARD OF APPEALS

Poss ~~11/25/03~~ 12/04/03

County Board of Appeals of Baltimore County

OLD COURTHOUSE, ROOM 49
400 WASHINGTON AVENUE
TOWSON, MARYLAND 21204
410-887-3180
FAX: 410-887-3182

PPd to 12/04/03 Req. of Petitioner

Hearing Room – Room 48
Old Courthouse, 400 Washington Avenue

March 20, 2003

SECOND NOTICE OF POSTPONEMENT & REASSIGNMENT

CASE #: 02-165-A

IN THE MATTER OF: ***Frieda G. Schaefer – Legal Owner; Bad Dog Corp., t/a An Pointin Stil – C.P. /Petitioner*** 2323 York Road
8th Election District; 3rd Councilmanic District

To be heard with: 02-533-SPHA

3/07/02 – Petition for Variance GRANTED in part and dismissed in part without prejudice by Zoning Commissioner.

which had been reassigned for hearing on 4/16/03 has been postponed at the request of Counsel for Petitioner, without objection by Appellants /Protestants as confirmed this date, pending settlement negotiations, and reassigned a date for hearing as needed; and has been

REASSIGNED FOR: **WEDNESDAY, AUGUST 13, 2003 at 10:00 a.m.**

NOTICE: **This appeal is an evidentiary hearing; therefore, parties should consider the advisability of retaining an attorney.**

Please refer to the Board's Rules of Practice & Procedure, Appendix C, Baltimore County Code.

IMPORTANT: No postponements will be granted without sufficient reasons; said requests must be in writing and in compliance with Rule 2(b) of the Board's Rules. No postponements will be granted within 15 days of scheduled hearing date unless in full compliance with Rule 2(c).

If you have a disability requiring special accommodations, please contact this office at least one week prior to hearing date.

Kathleen C. Bianco
Administrator

---

c: Appellants /Protestants : Greater Timonium Community Council, Inc.
by Eric Rockel, President
Louis W. Miller, Past President, GTCC
Larry Towsend, Zoning Chairman, GTCC

Counsel for Petitioners : F. Vernon Boozer, Esquire
Petitioners : John Mitcherling /Bad Dog Corporation
Frieda G. Schaefer c/o MNS Department 906

Alan Scott /D.S. Thaler & Associates, Inc.

Office of People's Counsel
Pat Keller, Planning Director
Lawrence E. Schmidt, Zoning Commissioner
Arnold Jablon, Director /PDM

Printed with Soybean Ink on Recycled Paper

COVAHEY & BOOZER, P. A.
ATTORNEYS AT LAW
614 BOSLEY AVENUE
TOWSON, MARYLAND 21204
AREA CODE 410
828-9441

FAX 410-823-7530

EDWARD C. COVAHEY, JR.
F. VERNON BOOZER *
MARK S. DEVAN
THOMAS P. DORE
MICHAEL T. PATE
STACIE D. TRAGESER

* ALSO ADMITTED TO D. C. BAR

ANNEX OFFICE
SUITE 302
606 BALTIMORE AVE.
TOWSON, MD 21204

March 19, 2003

Kathleen C. Bianco, Administrator
County Board of Appeals of Baltimore County
Old Courthouse, Room 49
400 Washington Avenue
Towson, MD 21204

RE: In the Matter of Frieda G. Schaefer
Bad Dog Corp., t/a An Poitin Stil
2323 York Road
Case No. 02-165-A

Dear Ms. Bianco:

The appellants and protestants have been negotiating a settlement. It appears more time will be needed and we request a postponement of the Hearing scheduled for April 16, 2003. The protestants advise they have no objection.

Your attention to this matter is appreciated

Very truly yours,

F. VERNON BOOZER

cc: Office of the People's Counsel
Greater Timonium Community Council, Inc.
Mr. Alan E. Scoll, D.S. Thaler & Assoc., Inc.

0319gab02

RECEIVED
MAR 20 2003
BALTIMORE COUNTY
BOARD OF APPEALS

1/6/03

RE: PETITION FOR VARIANCE 2323 York Rd; E/S York Rd, 82' S Rose St 15th Election District, 3rd Councilmanic	*	BEFORE THE COUNTY BOARD OF APPEALS
	*	FOR
Frieda G. Schaefer, Legal Owners Bad Dog, Corp., T/A An Poitin Stil, Contract Purchaser	*	BALTIMORE COUNTY
	*	Case No. 02-165-A
Petitioners		

* * * * * * * * * * * * *

PEOPLE'S COUNSEL'S FOR BALTIMORE COUNTY'S ARGUMENT OUTLINE

1. The Petitioner (The Stil) leased a site which was already substandard as to parking setbacks, aisle width, islands, and perhaps space size.

2. However, earlier restaurant uses for Bob's Big Boy and a diner did not cause parking problems, and the issue of parking variances did not arise.

3. After the Stil began operation, there developed parking problems. There are several reasons which contributed to the situation:

   a. The Stil was successful.

   b. The Stil expanded with a north addition (about 600sq.ft.), a storage area (250sq.ft. plus second floor), and seasonal patio (500sq.ft.).

   c. The size and width of vehicles, such as S.U.V.s and trucks, has increased.

4. The Planning Office confirmed that serious problems exist. P.C. Exhibit 8.

5. The Stil's search for offsite parking corroborates and confirms the evidence of parking problems.

6. If overflow parking occurs, then there is a potential for patrons to park in the residential area of West Timonium Heights, across York Road.

7. This burdens the residential area at night and causes a dangerous situation when patrons cross York Road.

8. The net result is that the restaurant's expansion has caused a parking deficiency and an adverse impact on the neighborhood, with genuine safety concerns.

9. While the actual parking deficiency seems modest (113-14 vs. 119), the restaurant is so popular that more than 119 spaces appear to be needed.

10. Petitioners have attempted to secure offsite parking, but do not show it clearly on the site plan and have not submitted it for review by the Zoning Office as required.

11. In any event, there are concerns about the validity and reliability of the three proposals.

    a. The most suitable location appears to be the "UPS" property at the south boundary. There is, however, a preliminary unresolved question whether the parking would be in the predominant M.R. zone, which does not allow commercial uses, rather than the smaller B.L. zone. Mr. Miller has identified the B.L. zone as having a driveway and stormwater management. Without a proper site plan and zoning review, this problem cannot be clarified or answered.

       Apart from that, there is the dilemma that UPS headquarters has denied written approval, so that Petitioners are relying on verbal assurances from local managers which, at best, could end at any time. This is a slender reed upon which to rely.

    b. The written agreement with the Evans Funeral Home to the north is problematic because the funeral home itself does not have adequate parking.

    c. The written agreement with Dr. Foster is skeletal. In any event, his property is across York Road and is zoned R.O.

12. Under all the circumstances, what is the justification for variances?

13. The property is not, in context, unique. Although it has a substantial forest buffer area and stream, the property enjoys at least one acre of useable area. A survey of restaurants in the Timonium area shows that the Stil's useable property is significantly larger than most restaurant properties. The forest buffer should be a non-issue.

14. As to the setback, aisle, island and other deviations, it is arguable that the owner of the property should have corrected these problems rather than lease a substandard site, which is more problematic in the age of S.U.V.s

15. But even if we excuse the Stil as inheriting some of the problems, the Stil caused new problems and deficiencies when it embarked on expansion.

16. There is no practical difficulty related to the property. Rather, the difficulty has to do with the expanded use and overcrowding of the site.

17. In light of the history of the Stil, there is concern not only about the expansion to date, but also about potential future incremental expansions.

18. On this record, it is obvious that the parking is inadequate, more inadequate than the numbers imply.

19. The obvious solution is offsite parking. Unfortunately, the current agreements proposed by the Stil are of doubtful validity and reliability.

20. Moreover, the Stil has not followed the procedure outlined by John Lewis for submission and review of offsite parking plans.

21. At this stage, the record does not support the variance requests because the proposal fails the test of uniqueness and true practical difficulty.

22. The offsite parking proposals, meanwhile, have not gone through the necessary review process and are not solid and reliable.

23. Under these circumstances, the Petition should be denied.

24. This would not prevent Petitioners from submitting a more definite and reliable offsite-parking plan on the UPS property.

25. Petitioners downplay the potential hazard of an accident which may occur when patrons park in West Timonium Heights and try to cross York Road on foot. Most reasonable people would not make the attempt. But a nightspot which attracts a young crowd is bound to have some reckless patrons. There should not be a zoning approval which leaves this open as a reasonable possibility. If an accident does occur, people may wonder how and why the Stil got variances.

Peter Max Zimmerman January 6, 2003

Peter Max Zimmerman Date
People's Counsel for Baltimore County

County Board of Appeals of Baltimore County

OLD COURTHOUSE, ROOM 49
400 WASHINGTON AVENUE
TOWSON, MARYLAND 21204
410-887-3180
FAX: 410-887-3182

pp'd to 8/13/03 - Petitioner's request; no obj. by Protestants

Hearing Room – Room 48
Old Courthouse, 400 Washington Avenue

December 18, 2002

NOTICE OF POSTPONEMENT & REASSIGNMENT

CASE #: 02-165-A

IN THE MATTER OF: ***Frieda G. Schaefer – Legal Owner; Bad Dog Corp., t/a An Pointin Stil – C.P. /Petitioner*** 2323 York Road
8th Election District; 3rd Councilmanic District

3/07/02 – Petition for Variance GRANTED in part and dismissed in part without prejudice by Zoning Commissioner.

which was postponed on the record on 12/18/02 has been reassigned a hearing date as follows:

REASSIGNED FOR: **WEDNESDAY, APRIL 16, 2003 at 10:00 a.m.**

NOTICE: **This appeal is an evidentiary hearing; therefore, parties should consider the advisability of retaining an attorney.**

Please refer to the Board's Rules of Practice & Procedure, Appendix C, Baltimore County Code.

IMPORTANT: No postponements will be granted without sufficient reasons; said requests must be in writing and in compliance with Rule 2(b) of the Board's Rules. No postponements will be granted within 15 days of scheduled hearing date unless in full compliance with Rule 2(c).

If you have a disability requiring special accommodations, please contact this office at least one week prior to hearing date.

Kathleen C. Bianco
Administrator

---

c: Appellants /Protestants : Greater Timonium Community Council, Inc.
by Eric Rockel, President
Louis W. Miller, Past President, GTCC
Larry Towsend, Zoning Chairman, GTCC

Counsel for Petitioners : F. Vernon Boozer, Esquire
Petitioners : John Mitcherling /Bad Dog Corporation
Frieda G. Schaefer c/o MNS Department 906

Alan Scott /D.S. Thaler & Associates, Inc.

Office of People's Counsel
Pat Keller, Planning Director
Lawrence E. Schmidt, Zoning Commissioner
Arnold Jablon, Director /PDM

Printed with Soybean Ink on Recycled Paper

Pet 3

2325 York Road, Timonium, Maryland 21093 • 410-252-8720 • Fax 410-560-5872

September 30, 2002

Dorsey Baldwin, Manager
An Poitin Stil Irish Pub and Restaurant
2323 York Road
Timonium, Maryland 21903

Re: Letter Agreement Regarding Parking and Other Matters

Dear Mr. Baldwin:

This letter will confirm the agreements that we have reached regarding the current parking and related matters. We sincerely hope that this will be a most workable solution and satisfy our mutual interests.

As we agreed, we will allow you no more than fifteen (15) of our parking spaces for your employee parking only, to be used on Tuesday, Wednesday, Thursday, Friday and Saturday nights beginning between 4:00-5:00 p.m., in exchange for the following:

1. Monthly Rental Payment. A rental payment of $250 per month, due on the first day of each and every month during the term of this agreement beginning October 1, 2002.

2. Notice Posted. You agree to post a notice on the bulletin board inside the front door of the restaurant that advises customers not to park on the funeral home's parking lot and that violators will be towed.

4. Location of Spaces. The spaces that will be used are located in the southeast corner of the parking lot.

5. Trimming of Trees. That you would keep the trees located along York Road sufficiently trimmed so that the funeral home's sign is clearly visible to traffic proceeding North on York Road.

6. No-Parking signs will be posted at various spots on the parking lot. Violators will be towed at owners expense.

To assist you in monitoring the parking lot and which of your employees are authorized to use one of the 15 allocated spaces, we will provide you with permits that you may issue to your employees. The permits will be of the type that hang from the rear view mirror's of the employee's automobiles and shall be visible whenever the automobiles are parked in the lot. Each employee authorized to use the spaces will be required to fill out a form with pertinent information about the vehicles they are driving. When need to be notified when an employee has terminated their employment and also when a new employee is hired so that we can keep our records up to date.

Lastly, this agreement will continue on a monthly basis but may be terminated by either party immediately for cause and on 15 days written notice to the other without cause. Upon termination, you shall return all parking permits.

County Board of Appeals of Baltimore County

OLD COURTHOUSE, ROOM 49
400 WASHINGTON AVENUE
TOWSON, MARYLAND 21204
410-887-3180
FAX: 410-887-3182

pp'd on recent possible resolution

Hearing Room – Room 48
Old Courthouse, 400 Washington Avenue

September 6, 2002

NOTICE OF ASSIGNMENT

CASE #: 02-165-A

IN THE MATTER OF: ***Frieda G. Schaefer – Legal Owner; Bad Dog Corp., t/a An Pointin Stil – C.P. /Petitioner*** 2323 York Road
8th Election District; 3rd Councilmanic District

3/07/02 – Petition for Variance GRANTED in part and dismissed in part without prejudice by Zoning Commissioner.

ASSIGNED FOR: **WEDNESDAY, DECEMBER 18, 2002 at 10:00 a.m.**

NOTICE: **This appeal is an evidentiary hearing; therefore, parties should consider the advisability of retaining an attorney.**

Please refer to the Board's Rules of Practice & Procedure, Appendix C, Baltimore County Code.

IMPORTANT: No postponements will be granted without sufficient reasons; said requests must be in writing and in compliance with Rule 2(b) of the Board's Rules. No postponements will be granted within 15 days of scheduled hearing date unless in full compliance with Rule 2(c).

If you have a disability requiring special accommodations, please contact this office at least one week prior to hearing date.

Kathleen C. Bianco
Administrator

---

c: Appellants /Protestants : Greater Timonium Community Council, Inc.
by Eric Rockel, President
Louis W. Miller, Past President, GTCC
Larry Towsend, Zoning Chairman, GTCC

Counsel for Petitioners : F. Vernon Boozer, Esquire
Petitioners : John Mitcherling /Bad Dog Corporation
Frieda G. Schaefer c/o MNS Department 906

Alan Scott /D.S. Thaler & Associates, Inc.

Office of People's Counsel
Pat Keller, Planning Director
Lawrence E. Schmidt, Zoning Commissioner
Arnold Jablon, Director /PDM

Printed with Soybean Ink
on Recycled Paper

Baltimore County
Zoning Commissioner

Suite 405, County Courts Bldg.
401 Bosley Avenue
Towson, Maryland 21204
410-887-4386
Fax: 410-887-3468

April 22, 2002

Mr. Alan E. Scoll, R.L.A.
D. S. Thaler & Associates, Inc.
7115 Ambassador Road
Baltimore, Maryland 21244-7428

RE: PETITION FOR VARIANCE
2323 York Road
Case No. 02-165-A

Dear Mr. Scoll:

In response to your letter dated April 18, 2002 concerning the above-captioned matter, the following comments are offered.

Please be advised that I no longer have jurisdiction over this case, inasmuch as an appeal of my decision was filed in this matter. However, I am forwarding your letter and its attachments to the County Board of Appeals for inclusion in their case file.

Should you have any further questions on the subject, it is suggested that you contact the Board at 410-887-3180.

Very truly yours,

LAWRENCE E. SCHMIDT
Zoning Commissioner
for Baltimore County

LES:bjs

cc: County Board of Appeals
Case File

RECEIVED
COUNTY BOARD OF APPEALS
02 APR 23 AM 11:17

Printed with Soybean Ink
on Recycled Paper

D.S. THALER & ASSOCIATES, INC.

7115 AMBASSADOR ROAD • P.O. BOX 47428 • BALTIMORE, MARYLAND 21244-7428
(410) 944-ENGR • (410) 944-3647 • FAX (410) 944-3684

April 18, 2002

APR 19 2002

Mr. Lawrence E. Schmidt
Zoning Commissioner for Baltimore County
Suite 405
County Courts Building
401 Bosley Avenue
Towson, MD 21204

RE: 2323 York Road
Petition for Variance
Case #02-165-A

Dear Mr. Schmidt:

Please find enclosed with this letter a "modified parking plan" for the referenced property prepared in accordance with your order and findings in the related case, dated March 7, 2002. This plan was prepared at your suggestion to see if additional parking spaces could be provided on-site through some minor modifications to the existing parking lot and striping program.

The enclosed plan proposes a total of eleven additional parking spaces as shown. On that basis, the total relief required in item 1 of the variance request is to allow 108 spaces in lieu of the 119 spaces required.

We therefore, on behalf of the petitioner, respectfully request that you amend your prior approval to accommodate this new plan.

Thank you for your kind consideration in this matter. Should you have any questions, please do not hesitate to contact our office.

Very truly yours,

D.S. THALER & ASSOCIATES, INC.

Alan E. Scoll, R.L.A.
Chief, Dept. of Landscape Architecture

Enclosure

Copy: John Mitcherling (with enclosure)
F. Vernon Boozer, Esquire (with enclosure)
David S. Thaler, P.E., L.S.

COVAHEY & BOOZER, P. A.
ATTORNEYS AT LAW
614 BOSLEY AVENUE
TOWSON, MARYLAND 21204
AREA CODE 410
828-9441

FAX 410-823-7530

EDWARD C. COVAHEY, JR.
F. VERNON BOOZER *
MARK S. DEVAN
THOMAS P. DORE
MICHAEL T. PATE
STACIE D. TRAGESER

* ALSO ADMITTED TO D. C. BAR

ANNEX OFFICE
SUITE 302
606 BALTIMORE AVE.
TOWSON, MD 21204

April 15, 2002

Baltimore County Board of Appeals
400 Washington Avenue
Room 49
Towson, MD 21204

RE: Case No. 02-165-A, 2323 York Road

Dear Sir or Madam:

Please be advised that I am representing Bad Dog Corp. in connection with the appeal filed in the above captioned matter.

If you have any questions, do not hesitate to contact my office.

Very truly yours,

F. VERNON BOOZER

cc: Mr. Alan E. Scoll, D.S. Thaler & Assoc.
Mr. Eric Rockel
Mr. Louis W. Miller
Mr. Larry Townsend

0415gab03

RECEIVED
COUNTY BOARD OF APPEALS
02 APR 16 PM 12:05

Baltimore County
Department of Permits and
Development Management

Director's Office
County Office Building
111 West Chesapeake Avenue
Towson, Maryland 21204
410-887-3353
Fax: 410-887-5708

April 4, 2002

Covahey & Boozer PA
Mr. F. Vernon Boozer
614 Bosley Avenue
Towson MD 21204

Dear Mr. Boozer:

RE: Case No. 02-165-A, 2323 York Road

Please be advised that an appeal of the above-referenced case was filed in this office on March 27, 2002 by Mr. Eric Rockel, President, Greater Timonium Community Council Inc. All materials relative to the case have been forwarded to the Baltimore County Board of Appeals (Board).

If you are the person or party taking the appeal, you should notify other similarly interested parties or persons known to you of the appeal. If you are an attorney of record, it is your responsibility to notify your client.

If you have any questions concerning this matter, please do not hesitate to call the Board at 410-887-3180.

Sincerely,

Arnold Jablon GDZ
Director

AJ: gdz

c: John Mitcherling, Bad Dog Corp, 2323 York Road, Timonium 21093
Alan Scott, D. S. Thaler & Assoc Inc, 7115 Ambassador Road, Baltimore 21204
Eric Rockel, 9B Ridgely Road, Timonium 21083
Louis W Miller, 44 E Timonium Road, Timonium 21093
Larry Townsend, 1111 Longbrook Road, Lutherville 21093
People's Counsel

RECEIVED
COUNTY BOARD OF APPEALS
02 APR -8 AM 8:49

Printed with Soybean Ink
on Recycled Paper

APPEAL SIGN POSTING REQUEST

CASE NO.: 02-165-A

Frieda G. Schaefer - LEGAL OWNERS
Bad Dog Corp., t/a An Pointin Stil – Contract Purchaser

2323 York Road

8th ELECTION DISTRICT APPEALED: March 27, 2002

ATTACHMENT – None

**********COMPLETE AND RETURN BELOW INFORMATION*****

CERTIFICATE OF POSTING

TO: Baltimore County Board of Appeals
400 Washington Avenue, Room 49
Towson, Maryland 21204

Attention: Kathleen Bianco
Administrator

RE: Case No.: 02-165-A

Petitioner/Developer:

FRIEDA G. SCHAEFER

This is to certify that the necessary appeal sign was posted conspicuously on the property located at:

The sign was posted on 4/18/02, 2002

By: Gary C. Freund
(Signature of Sign Poster)

GARY C. FREUND
(Printed Name)

APPEAL

Petition For Variance
2323 York Road
E/S York Road, 82' S of Rose Street
8th Election District – 3rd Councilmanic District
Frieda G. Schaefer - Legal Owner
Bad Dog Corp., t/z An Pointin Stil- Contract Purchaser
Case No.: 02-165-A

✓ Petition for Variance (dated 10/22/01)

✓ Zoning Description of Property

✓ Notice of Zoning Hearing (01/28/02)
✓ Notice of Zoning Hearing (12/27/01)
✓ Notice of Zoning Hearing (11/28/01)

✓ Certification of Publication (The Jeffersonian issue dated 01/15/02)
✓ Certification of Publication (The Jeffersonian issue dated 12/14/01)

Certificate of Posting (No Copy)

✓ Entry of Appearance by People's Counsel (12/10/01)

✓ Petitioner(s) Sign-In Sheet (1 page)

✓ Protestant(s) Sign-In Sheet (1 page)

✓ Citizen(s) Sign-In Sheet (none)

✓ Zoning Advisory Committee Comments

✓ Petitioners' Exhibits: (none)

✓ Protestants' Exhibits: (none)

✓ Miscellaneous (Not Marked as Exhibits): (none)

✓ Zoning Commissioner's Order (03/07/02 - GRANTED)

✓ Notice of Appeal received on 03/27/02 from Eric Rockel, President, Greater Timonium Community Council, Inc.

c: ~~Covahey & Boozer PA, Mr. F. Vernon Boozer 614 Bosley Avenue, Towson 21204~~
People's Counsel of Baltimore County, MS #2010
Lawrence Schmidt, Zoning Commissioner
Arnold Jablon, Director of PDM

ATTN/ PETITIONER

F. Vernon Boozer, Esquire, Covahey & Boozer PA, 614 Bosley Avenue, Towson, MD 21204
John Mitcherling, Bad Dog Corp, 2323 York Road, Timonium, MD 21093 – CP
Eric Rockel, President, Greater Timonium Community Council, Inc., 9B Ridgely Road Timonium, MD 21093 – APPELLANT
Louis W. Miller, 44 E. Timonium Road, Timonium, MD 21093 no such street 1/13/04 DS
Alan Scott, D.S. Thaler & Associates, Inc., ~~7115 Ambassador Road, Towson, MD 21204~~
Frieda G. Schaefer, ~~c/o MNS Department 906, Bethesda, MD 20817-1109~~ → LO / PET
Larry Towsend, 1111 Longbrook Road, Lutherville, MD 21093 → 10400 Fernwood Rd

7115 Ambassador Rd 21244

✓ E

APPEAL

Petition For Variance
2323 York Road
E/S York Road, 82' S of Rose Street
8th Election District – 3rd Councilmanic District
Frieda G. Schaefer - Legal Owner
Bad Dog Corp., t/z An Pointin Stil- Contract Purchaser
Case No.: 02-165-A

Petition for Variance (dated 10/22/01)

Zoning Description of Property

Notice of Zoning Hearing (01/28/02)
Notice of Zoning Hearing (12/27/01)
Notice of Zoning Hearing (11/28/01)

Certification of Publication (The Jeffersonian issue dated 01/15/02)
Certification of Publication (The Jeffersonian issue dated 12/14/01)

Certificate of Posting (No Copy)

Entry of Appearance by People's Counsel (12/10/01)

Petitioner(s) Sign-In Sheet (1 page)

Protestant(s) Sign-In Sheet (1 page)

Citizen(s) Sign-In Sheet (none)

Zoning Advisory Committee Comments

Petitioners' Exhibits: (none)

Protestants' Exhibits: (none)

Miscellaneous (Not Marked as Exhibits): (none)

Zoning Commissioner's Order (03/07/02 - GRANTED)

Notice of Appeal received on 03/27/02 from Eric Rockel, President, Greater Timonium Community Council, Inc.

c: Covahey & Boozer PA, Mr. F. Vernon Boozer 614 Bosley Avenue, Towson 21204
People's Counsel of Baltimore County, MS #2010
Lawrence Schmidt, Zoning Commissioner
Arnold Jablon, Director of PDM

BALTIMORE COUNTY, MARYLAND
OFFICE OF BUDGET & FINANCE
MISCELLANEOUS RECEIPT

No. 11171

DATE 3-29-02 ACCOUNT 001-006-6150

AMOUNT $ 210.00

RECEIVED FROM: ERIC ROCKEL
GREATER TIMONIUM COMMUNITY COUNCIL INC

FOR: HEARING APPEAL 02-165-A
BAD DOG CORP T/A AN POINT'N STIL

DISTRIBUTION
WHITE - CASHIER PINK - AGENCY YELLOW - CUSTOMER

DATA RECEIPT
PAID RECEIPT
BUSINESS ACTUAL TIME
03/01/2002 3/29/2002 15:19:45
REG W004 WALKIN DEOL DHD DRAWER 2
>>RECEIPT # 17925 3/29/2002 OFLN
Dept 5 520 ZONING VERIFICATION
CE NO. 011171
Recpt Tot $210.00
210.00 CK .00 CA
Baltimore County, Maryland

CASHIER'S VALIDATION

Greater Timonium Community Council, Inc.
9B Ridgely Rd.
Timonium, Md. 21093
Phone: 410-252-3444 Email: Leabo@aol.com

HAND DELIVER
JM

RECEIVED
MAR 27 2002
By GDZ

March 25, 2002

Arnold Jablon, Director
Department of Permits and Development Management
111 W. Chesapeake Avenue
Towson, Md. 21204

Re: PETITION FOR VARIANCE
2323 York Road, E/S York Rd, 82' S of c.l Rose St.
8th Election Dist. 3rd Councilmanic
Legal Owner: Frieda G. Schaefer
Lessee: Bad Dog Corp., t/z An Pointin Stil
Case No.: 02-165-A

Dear Mr. Jablon:

Please enter an appeal for the Greater Timonium Community Council, Inc. and Louis W. Miller, Past President, and Larry Towsend, Zoning Chairman of the Greater Timonium Community Council, Inc. to the County Board of appeals from the Findings of Fact and Conclusions of Law of the Baltimore County Zoning Commissioner dated March 7, 2002 in the above-entitled case.

Enclosed is our check in the amount of $210 for the filing fee. Please forward copies of any papers pertinent to the appeal as necessary and appropriate.

Very truly yours,

Eric Rockel

Greater Timonium Community Council, Inc.
By: Eric Rockel, President, 9B Ridgely Rd., Timonium, Md. 21093,
Phone: 410-252-8439

Louis W. Miller, Past President, 44 E. Timonium Rd, Timonium, Md. 21093
Phone: 410-252-3444

Larry Towsend, Zoning Chair, 111 Longbrook Rd., Lutherville, Md. 21093
Phone: 410-321-8242

CC: F Vernon Boozer, Esq. Covahey & Boozer, 614 Bosley Ave., Towson, Md., 21204, Atty for Petitioner
People's Counsel for Baltimore County, Old Court House, Rm 47, 400 Washington Ave., Towson, Md 21204

File: GTCC-Stil' Appeal 2002.wps

Greater Timonium Community Council, Inc.
9B Ridgely Rd.
Timonium, Md. 21093
Phone: 410-252-3444 Email: Leabo@aol.com

March 25, 2002

Arnold Jablon, Director
Department of Permits and Development Management
111 W. Chesapeake Avenue
Towson, Md. 21204

RECEIVED
MAR 27 2002
By GDZ

Re: PETITION FOR VARIANCE
2323 York Road, E/S York Rd, 82' S of c.l Rose St.
8th Election Dist. 3rd Councilmanic
Legal Owner: Frieda G. Schaefer
Lessee: Bad Dog Corp., t/z An Pointin Stil
Case No.: 02-165-A

Dear Mr. Jablon:

Please enter an appeal for the Greater Timonium Community Council, Inc. and Louis W. Miller, Past President, and Larry Towsend, Zoning Chairman of the Greater Timonium Community Council, Inc. to the County Board of appeals from the Findings of Fact and Conclusions of Law of the Baltimore County Zoning Commissioner dated March 7, 2002 in the above-entitled case.

Enclosed is our check in the amount of $210 for the filing fee. Please forward copies of any papers pertinent to the appeal as necessary and appropriate.

Very truly yours,

Greater Timonium Community Council, Inc.
By: Eric Rockel, President, 9B Ridgely Rd., Timonium, Md. 21093,
Phone: 410-252-8439

Louis W. Miller, Past President, 44 E. Timonium Rd, Timonium, Md. 21093
Phone: 410-252-3444

Larry Towsend, Zoning Chair, 111 Longbrook Rd., Lutherville, Md. 21093
Phone: 410-321-8242

CC: F Vernon Boozer, Esq. Covahey & Boozer, 614 Bosley Ave., Towson, Md., 21204, Atty for Petitioner
People's Counsel for Baltimore County, Old Court House, Rm 47, 400 Washington Ave., Towson, Md 21204

File: GTCC-Stil' Appeal 2002.wps

3/7/02

IN RE: PETITION FOR VARIANCE E/S York Road, 82' S of Rose Street (2323 York Road) 8th Election District 3rd Council District	* * *	BEFORE THE ZONING COMMISSIONER OF BALTIMORE COUNTY
Frieda G. Schaefer, Legal Owner; John Mitcherling, Bad Dog Corp., t/a An Pointin Still, Contract Lessee	* *	Case No. 02-165-A

* * * * * * * * * * *

FINDINGS OF FACT AND CONCLUSIONS OF LAW

This matter comes before the Zoning Commissioner for consideration of a Petition for Variance filed by the owner of the subject property, Frieda G. Schaefer, and the Contract Lessee, Bad Dog Corporation, t/a An Pointin Still, by John Mitcherling, through their attorney, F. Vernon Boozer, Esquire. The Petitioners seek relief from the Baltimore County Zoning Regulations (B.C.Z.R.) as follows: From Section 409.6.2 of to permit 97 parking spaces in lieu of the required 119; from Section 409.3 to permit 11 parking spaces to be 8 feet wide in lieu of the required 8.5 feet; from Section 409.4.C to permit parking aisle width of 20 feet in lieu of the required 22 feet; and, from Section 409.8.A.4 to permit a parking setback to a street right-of-way of 9 feet in lieu of the required 10 feet. In addition, the Petitioners request relief from Section 409.8.A.1 of the B.C.Z.R. and Part III.B.2.a, 2.c and 2.d of the Landscape Manual as follows: to permit 3% of the parking lot to be internal islands in lieu of the required 7%; to permit parking islands 2.5 feet wide in lieu of the required 9 feet; and, to allow a 6-inch parking to building setback in lieu of the required 6 feet. Finally, the Petitioners request relief from Section 450.7.B.1 of the B.C.Z.R. to permit a freestanding enterprise sign with a non-contiguous reader board, and, from Section 450.7.B.2 to permit said reader board to be 71.1% (32.sq.ft. per face) of an erected permitted enterprise sign, in lieu of the maximum allowed 50% (22.5 sq.ft. per face). The subject property and requested relief are more particularly described on the site plan submitted, which was accepted into evidence and marked as Petitioner's Exhibit 1.

ORDER RECEIVED FOR FILING
Date 3/7/02
By

Appearing at the requisite public hearing in support of the request were Dr. John Mitcherling and Dr. William Mitcherling, principals of Bad Dog Corporation, Contract Lessees; Alan Scoll, a Registered Landscape Architect with D. S. Thaler & Associates, Inc., who prepared the site plan for this property; and, F. Vernon Boozer, Esquire, attorney for the Petitioners. Appearing as Protestants in the matter were Larry Townsend and Louis W. Miller, representatives of the Greater Timonium Community Council, Inc.

At the onset of the hearing, the Petitioners modified the requested relief. Specifically, the Petitioners advised that they were withdrawing the request for variance from Section 450.7.B.1 and B.2 relative to a proposed leader-board sign. In this regard, the Petitioners indicated that they would retain the existing sign in its present size and configuration. That sign is nonconforming, pursuant to Section 450.8.C of the B.C.Z.R., and as such, is subject to those requirements. The hearing then proceeded on the remaining variance requests.

Testimony was received from Alan Scoll, the Landscape Architect who prepared the site plan for this property. He testified that the property contains approximately 1.82 acres, more or less, zoned B.L., and is roughly triangular in shape, with frontage on York Road (Maryland Route 45), near the Maryland State Fairgrounds in Timonium. Mr. Scoll opined that the property is unique. In support of this conclusion, he observed the unusual shape of the property. More importantly, he noted that approximately a third of the property is not developable due to environmental constraints. Specifically, an existing stream traverses the rear portion of the site. Under environmental regulations, development cannot occur on this portion of the site and certain buffers must be retained.

As amended, variance relief is requested from a series of the parking regulations contained in Section 409 of the B.C.Z.R. These requests are necessitated by the existing use of the property as a restaurant. Although only in operation since 1999, the restaurant, known as An Pointin Still, has enjoyed success and is a popular establishment in the Timonium area. The restaurant occupies a one-story building, containing 7,139 sq.ft. in area. A small alteration of the building is proposed whereby an existing porch/deck area will be enclosed.

ORDER RECEIVED FOR FILING
Date 3/7/02
By

Owing to the popularity of the use, this Zoning Commissioner is well-aware of the fact that parking is frequently at a premium. Particularly on busy weekend nights, the existing lot is fully occupied. In this regard, the parking provided on site encircles the building with a paved area. There are 97 parking spaces provided in lieu of the 119 required, pursuant to the parking regulations codified in Section 409.6.2 of the B.C.Z.R. Additionally, 11 of the 97 spaces are only 8 feet wide in lieu of the required 8.5 feet. The other variances relate to parking aisle widths at some locations (20 feet in lieu of 22 feet), and a slightly reduced parking setback (9 feet in lieu of the required 10 feet) along the front of the property adjacent to York Road. The final variance requests a modification in the number of internal islands provided on the site (3% in lieu of the required 7%), to allow parking islands to be 2.5 feet wide in lieu of the required 9 feet, and to allow a 6-inch setback from the edge of the parking lot to a corner of the building.

In addition to the testimony of Mr. Scoll, testimony was also received from John Mitcherling, one of the principals of Bad Dog Corporation. Dr. Mitcherling described the use and parking arrangements. He indicated that the business had never been cited with any violations and enjoyed an excellent relationship with its neighbors. Although acknowledging that parking is at a premium during busy times, he indicated that the restaurant had made arrangements for off-site parking on special occasions (e.g. St. Patrick's Day). At those times, the restaurant has arranged for off-site parking at either the State Fairgrounds or the public Park & Ride located on Aylesbury Road in Timonium. Patrons were then bused from those lots to the subject site. Dr. Mitcherling expressed a willingness to continue to work with the neighborhood and community to insure that there would not be an overflow of parking onto adjacent public roads and into the residential community nearby.

Messrs. Miller and Townsend appeared on behalf of the Greater Timonium Community Council (GTCC). Although supportive of an existing and vibrant business, they fear the potential for traffic congestion in the area. They expressed concerns over utilization of off-site properties to provide parking for the subject site, particularly if those properties are residentially zoned. At this point, there is no such request before me, only the variances as to the existing lot.

ORDER RECEIVED FOR FILING
Date 3/7/02
By

The consideration of variances in Baltimore County is governed by Section 307 of the B.C.Z.R. This Section was construed by the Court of Special Appeals in Cromwell v. Ward, 102 Md. App 691 (1995). Therein the Court set out a three-part test which must be met in order for variance relief to be granted. First, the applicant/property owner must show that the property is unique and that this uniqueness drives the need for the variance. Second, it must be shown that a practical difficulty would result if relief were denied. Third, variance relief can only be granted if there will be no detrimental impact to adjacent properties.

In this case, I am easily persuaded that the property is unique. Admittedly, that is frequently a difficult task. However in this case, the configuration and environmental constraints associated with this property justify such a finding. The existing stream and buffer area clearly limit development potential and provide limited area for parking and an unusual parking layout. I easily find that the subject property is unique and that those factors necessitate variance relief. Moreover, I find that the Petitioners would suffer a practical difficulty if relief were denied. The use is permitted by right and is a vibrant commercial operation. To jeopardize that operation would be inappropriate. Finally, there was no testimony or evidence presented that the current parking arrangement causes any detrimental impacts on the surrounding locale. There was no testimony from Messrs. Miller or Townsend to that effect, and Dr. Mitcherling emphasized the good relationship the business has with its neighbors.

For all of these reasons I am persuaded to grant the Petition for Variance. The existing 97 parking spaces in lieu of the 119 required is all that can be provided on this site. It is also to be noted that the 11 spaces that are less than the required 8.5 feet in width should be permitted to remain. To require removal of those spaces would reduce parking and be inappropriate. Third, the reduced aisle widths occur only in a portion of the site and do not appear to adversely impact traffic flow or circulation on the property. Fourth, photographs were submitted at the hearing which show that the property is landscaped. The building and the site are one of the more attractive properties along this stretch of York Road. The 9-foot strip along the front of the property is sufficient to provide adequate landscaping. A slight variance of 1-foot here is

ORDER RECEIVED FOR FILING
Date 3/7/02
By

warranted. To require the full 10 feet would be unreasonable and further crowd the parking lot. Finally, the variances as they relate to the internal islands and parking lot to building setback are appropriate. Again, these are driven by the unique characteristics of the property.

Although variance relief shall be granted, several other concerns are worth noting. First, I recommend that the Petitioners continue in their efforts to provide maximum parking on site and make arrangements for off-site parking at appropriate times. The Petitioners could present a modified parking plan for approval, pursuant to Section 409.12 of the B.C.Z.R. No such plan is before me at the present time and I make no judgment about off-site options; however, GTCC's opposition to parking in a residential zone is well-founded and has not been supported in this area for other similar uses. Nonetheless, the Petitioners may be able to make arrangements with other commercial properties in the area. Secondly, it appears that the Petitioners may be able to modify their plan to provide more parking on the southwest corner of the site. Previously, access was provided from the subject property to the adjacent lot, which, at one time, featured an auto repair shop. Apparently, that lot is being redeveloped, and as a result, the access will be closed. Although the requisite engineering has not been undertaken, it appears that the Petitioners may be able to provide several additional spaces along that portion of the site by slightly reconfiguring the lot. I urge the Petitioners to explore this alternative, and if same can be accomplished, it should be instituted. The Petitioners could request that the Zoning Commissioner amend this approval to accommodate a new plan without the necessity of further public hearings.

Pursuant to the advertisement, posting of the property and public hearing on this Petition held, and for the reasons set forth herein, the relief requested, as modified, shall be granted.

THEREFORE, IT IS ORDERED by the Zoning Commissioner for Baltimore County this 7th day of March, 2002 that the Petition for Variance seeking relief from the Baltimore County Zoning Regulations (B.C.Z.R.) as follows: From Section 409.6.2 of to permit 97 parking spaces in lieu of the required 119; from Section 409.3 to permit 11 parking spaces to be 8 feet wide in lieu of the required 8.5 feet; from Section 409.4.C to permit parking aisle width of 20 feet in lieu

ORDER RECEIVED FOR FILING
Date 3/7/02
By

of the required 22 feet; from Section 409.8.A.4 to permit a parking setback to a street right-of-way of 9 feet in lieu of the required 10 feet; and, from Section 409.8.A.1 of the B.C.Z.R. and Part III.B.2.a, 2.c and 2.d of the Landscape Manual as follows: to permit 3% of the parking lot to be internal islands in lieu of the required 7%; to permit parking islands 2.5 feet wide in lieu of the required 9 feet; and, to allow a 6-inch parking to building setback in lieu of the required 6 feet, in accordance with Petitioner's Exhibit 1, be and is hereby GRANTED, subject to the following restriction:

1) The Petitioners may apply for their building permit and be granted same upon receipt of this Order; however, Petitioners are hereby made aware that proceeding at this time is at their own risk until the 30-day appeal period from the date of this Order has expired. If an appeal is filed and this Order is reversed, the relief granted herein shall be rescinded.

IT IS FURTHER ORDERED that the variance seeking relief from Section 450.7.B.1 of the B.C.Z.R. to permit a freestanding enterprise sign with a non-contiguous reader board, and, from Section 450.7.B.2 to permit said reader board to be 71.1% (32.sq.ft. per face) of an erected permitted enterprise sign, in lieu of the maximum allowed 50% (22.5 sq.ft. per face), in accordance with Petitioner's Exhibit 1, be and is hereby DISMISSED without prejudice.

LAWRENCE E. SCHMIDT
Zoning Commissioner
for Baltimore County

LES:bjs

ORDER RECEIVED FOR FILING
Date 3/7/02
By

Baltimore County
Zoning Commissioner

Suite 405, County Courts Bldg.
401 Bosley Avenue
Towson, Maryland 21204
410-887-4386
Fax: 410-887-3468

March 7, 2002

F. Vernon Boozer, Esquire
Covahey & Boozer
614 Bosley Avenue
Towson, Maryland 21204

RE: PETITION FOR VARIANCE
E/S York Road, 82' S of Rose Street
(2323 York Road)
8th Election District – 3rd Council District
Frieda G. Schaefer, Legal Owner; Bad Dog Corp., t/a An Pointin Stil
Case No. 02-165-A

Dear Mr. Boozer:

Enclosed please find a copy of the decision rendered in the above-captioned matter. The Petition for Variance, as modified, has been granted, in accordance with the attached Order.

In the event any party finds the decision rendered is unfavorable, any party may file an appeal to the County Board of Appeals within thirty (30) days of the date of this Order. For further information on filing an appeal, please contact the Department of Permits and Development Management office at 887-3391.

Very truly yours,

LAWRENCE E. SCHMIDT
Zoning Commissioner
for Baltimore County

LES:bjs

cc: Dr. John Mitcherling, 2323 York Road, Towson, Md. 21093
Mr. Alan Scoll, D.S. Thaler & Assoc., 7115 Ambassador Road, Baltimore, Md. 21244
Mr. Larry Townsend, 1111 Longbrook Road, Lutherville, Md. 21093
Mr. Louis W. Miller, 44 E. Timonium Road, Timonium, Md. 21093
People's Counsel; Case File

Printed with Soybean Ink on Recycled Paper

IN RE: PETITION FOR VARIANCE E/S York Road, 82' S of Rose Street (2323 York Road) 8th Election Street 3rd Council District	* * *	BEFORE THE ZONING COMMISSIONERS OF BALTIMORE COUNTY
Freida G. Schaefer, Legal Owner; John Mitcherling, Bad Dog Corp., t/a An Poitin Stil, Contract Lessee	* *	Case No. 02-165-A

* * * * * *

OUTLINE FOR ARGUMENT

EXISTING USE - use as a restaurant by present operators since 1999 and a popular establishment in the Timonium area. Restaurant occupies a one-story building of 6986 square feet.

RELIEF SOUGHT BY PETITIONERS - 97 spaces in lieu of 119 required; 11 parking spaces to be 8 feet in lieu of 8-1/2 feet; parking aisle width of 20 feet in lieu of 22; feet parking setback to York Road of 9 feet in lieu of 10 feet.

3% internal islands in lieu of 7%; parking islands 2-1/2 feet wide in lieu of 9 feet; 6 inches to building setback in lieu of 6 feet.

TESTIMONY OF ALAN SCOLL, LANDSCAPE ARCHITECT - Property zoned BL and contains 1.82 acres, triangular in shape.

Opinion - property unique shape and approximately 1/3 (.68 acres) is not developable due to environmental constraints - Declaration of protective covenants, conditions and restrictions required by Baltimore County and dated November 1, 2001. An existing stream traverses the property. Development cannot occur on Northernmost .68 acre portion and certain buffers must be retained.

Scoll - further opined practical difficulty would result if relief denied and there would be no detrimental impact to adjacent properties. Mr. Scoll testified to 114

spaces existing and 118 required by square footage of the building (6986 square feet). Shed for storage requires 4 parking spaces.

TESTIMONY OF OWNERS - JOHN MITCHERLING AND DORSEY BALDWIN - Mr. Baldwin testified to oral argument of use of adjacent property to the South. He also produced written agreements for the adjacent property to the North and another property to the North and across York Road (West side). Dr. Mitcherling testified never cited with any violations and excellent relationship with neighbors. Special arrangements for off-site parking - Fairgrounds and Park & Ride on Aylesbury Road for special occasions.

TESTIMONY OF PROTESTANTS - Louis W. Miller, Past President of GTCC, testified 113 spaces and only 2 less than 8-1/2 feet or 8 feet. Produced locations of other restaurants from Timonium to Hunt Valley with information as to shape of land and/or building; without information as to parking on or off site; without information as to orientation of building on the property.

Eric Rochel, who lives a good distance from the site and could not testify as to origination point on 2 occasions of persons crossing York Road - Testified as to one (1) complaint from a Harold Barnes who did not appear to testify.

F. VERNON BOOZER

gab031210

Baltimore County
Department of Permits and
Development Management

Director's Office
County Office Building
111 West Chesapeake Avenue
Towson, Maryland 21204
410-887-3353
Fax: 410-887-5708

January 28, 2001

NOTICE OF ZONING HEARING

The Zoning Commissioner of Baltimore County, by authority of the Zoning Act and Regulations of Baltimore County, will hold a public hearing in Towson, Maryland on the property identified herein as follows:

CASE NUMBER: 02-165-A
2323 York Road
E/S York Road, 82' S of Rose Street
8th Election District – 3rd Councilmanic District
Legal Owner: Frieda G Schaefer
Contract Purchaser: John Mitcherling, Bad Dog Corp, T/A An Poitin Still

Variance to allow 97 parking spaces in lieu of 119 spaces required. To allow standard angled parking spaces eight feet wide in lieu of 8.5 feet required. To allow parking aisle widths of 20 feet in lieu of 22 feet required. To allow a nine-foot setback from parking to a street right-of-way in lieu of 10 feet required. To allow three percent of the parking lot to be internal islands in lieu of seven percent required. To allow parking islands 2.5 feet wide in lieu of nine feet required. To allow 6-inch setback parking-to-building in lieu of six feet required. To allow a freestanding enterprise sin with a non-contiguous reader-board. To allow a reader-board larger than 50% of an erected permitted enterprise sign. Any other variances deemed necessary by the zoning commissioner.

HEARING: Wednesday, February 20, 2002 at 2:00 p.m. in Room 407, County Courts Building, 401 Bosley Avenue

Arnold Jablon GDZ
Director

C: F. Vernon Boozer, Covahey & Boozer PA, 815 Bosley Avenue, Towson 21204
Frieda G. Schaefer c/o MNS Department 906, 10400 Fernwood Road, Bethesda 20817
John Mitcherling, Bad Dog Corp, 2323 York Road, Timonium 21093
D.S. Thaler & Associates, Inc, P O Box 47428, Baltimore 21244
Larry Townsend, GTTC, 9B Ridgely Road, Timonium MD 21093

NOTES: (1) **THE PETITIONER MUST HAVE THE ZONING NOTICE SIGN POSTED BY AN APPROVED POSTER ON THE PROPERTY BY TUESDAY, FEBRUARY 5, 2002.**
(2) HEARINGS ARE HANDICAPPED ACCESSIBLE; FOR SPECIAL ACCOMMODATIONS PLEASE CALL THE ZONING COMMISSIONER'S OFFICE AT 410-887-4386.
(3) FOR INFORMATION CONCERNING THE FILE AND/OR HEARING, CONTACT THE ZONING REVIEW OFFICE AT 410-887-3391.

Printed with Soybean Ink

Baltimore County
Department of Permits and
Development Management

Director's Office
County Office Building
111 West Chesapeake Avenue
Towson, Maryland 21204
410-887-3353
Fax: 410-887-5708

January 24, 2001

NOTICE OF ZONING HEARING

The Zoning Commissioner of Baltimore County, by authority of the Zoning Act and Regulations of Baltimore County, will hold a public hearing in Towson, Maryland on the property identified herein as follows:

CASE NUMBER: 02-165-A
2323 York Road
E/S York Road, 82' S of Rose Street
8th Election District – 3rd Councilmanic District
Legal Owner: Frieda G Schaefer
Contract Purchaser: John Mitcherling, Bad Dog Corp, T/A An Poitin Still

Variance to allow 97 parking spaces in lieu of 119 spaces required. To allow standard angled parking spaces eight feet wide in lieu of 8.5 feet required. To allow parking aisle widths of 20 feet in lieu of 22 feet required. To allow a nine-foot setback from parking to a street right-of-way in lieu of 10 feet required. To allow three percent of the parking lot to be internal islands in lieu of seven percent required. To allow parking islands 2.5 feet wide in lieu of nine feet required. To allow 6-inch setback parking-to-building in lieu of six feet required. To allow a freestanding enterprise sin with a non-contiguous reader-board. To allow a reader-board larger than 50% of an erected permitted enterprise sign. Any other variances deemed necessary by the zoning commissioner.

HEARING: Thursday, February 14, 2002 at 11:00 a.m. in Room 407, County Courts Building, 401 Bosley Avenue

Arnold Jablon GDZ
Director

C: F. Vernon Boozer, Covahey & Boozer PA, 815 Bosley Avenue, Towson 21204
Frieda G. Schaefer c/o MNS Department 906, 10400 Fernwood Road, Bethesda 20817
John Mitcherling, Bad Dog Corp, 2323 York Road, Timonium 21093
D.S. Thaler & Associates, Inc, P O Box 47428, Baltimore 21244
Larry Townsend, GTTC, 9B Ridgely Road, Timonium MD 21093

NOTES: (1) **THE PETITIONER MUST HAVE THE ZONING NOTICE SIGN POSTED BY AN APPROVED POSTER ON THE PROPERTY BY WEDNESDAY, JANUARY 30, 2002.**
(2) HEARINGS ARE HANDICAPPED ACCESSIBLE; FOR SPECIAL ACCOMMODATIONS PLEASE CALL THE ZONING COMMISSIONER'S OFFICE AT 410-887-4386.
(3) FOR INFORMATION CONCERNING THE FILE AND/OR HEARING, CONTACT THE ZONING REVIEW OFFICE AT 410-887-3391.

Printed with Soybean Ink
on Recycled Paper

Baltimore County
Department of Permits and
Development Management

Director's Office
County Office Building
111 West Chesapeake Avenue
Towson, Maryland 21204
410-887-3353
Fax: 410-887-5708

January 24, 2002

Larry Townsend
GTTC
9B Ridgely Road
Timonium MD 21093

Dear Mr. Townsend:

RE: Case Number 02-165-A, 2323 York Road

The above matter, previously scheduled for Wednesday, January 30, 2002 at 11:00 a.m. in Room 407, has been postponed at your request. Once the hearing has been rescheduled you will be notified by mail.

Please be advised that, as the individual requesting and receiving the postponement, the responsibility and costs associated with the appropriate posting of the property now lies with you. The petitioner or his/her agent may not personally post or change a zoning sign. One of the currently approved vendors/posters must be contacted to do so. If the property has been posted with notice of the original hearing date, as quickly as possible a notice of the new hearing date should be affixed to the sign(s).

Very truly yours,

Arnold Jablon GDZ
Director

AJ: gdz

C: F. Vernon Boozer, 614 Bosley Avenue, Towson 21204
Frieda G Schaefer, c/o MNS Department 906 Bethesda 20817
John Mitcherling, Bad Dog Corp, 2323 York Road, Timonium 21093
D. S. Thaler & Associates Inc, P O Box 47428, Baltimore 21244

Printed with Soybean Ink
on Recycled Paper

NOTICE OF ZONING HEARING

The Zoning Commissioner of Baltimore County, by authority of the Zoning Act and Regulations of Baltimore County will hold a public hearing in Towson, Maryland on the property identified herein as follows:

Case: #02-165-A
2323 York Road
E/S York Road, 82' S of Rose Street
8th Election District – 3rd Councilmanic District
Legal Owner(s): Frieda G. Schaefer
Contract Purchaser: John Mitchering, Bad Dog Corp, T/A An Poitin Still

Variance: to allow 97 parking spaces in lieu of 119 spaces required. To allow standard angled parking spaces eight feet wide in lieu of 8.5 feet required. To allow parking aisle widths of 20 feet in lieu of 22 feet required. To allow a nine foot setback from parking to a street right-of-way in lieu of 10 feet required. To allow three percent of the parking lot to be internal islands in lieu of seven percent required. To allow parking islands 2.5 feet wide in lieu of nine feet required. To allow 6-inch setback parking-to-building in lieu of six feet required. To allow a freestanding enterprise sign with a non-contiguous reader-board. To allow a reader-board larger than 50% of an erected permitted enterprise sign. Any other variances deemed necessary by the zoning commissioner.

Hearing: Wednesday, January 30, 2002 at 11:00 a.m. in Room 407, County Courts Building, 401 Bosley Avenue.

LAWRENCE E. SCHMIDT
Zoning Commissioner for Baltimore County

NOTES: (1) Hearings are Handicapped Accessible; for special accommodations Please Contact the Zoning Commissioner's Office at (410) 887-4386.
(2) For information concerning the File and/or Hearing, Contact the Zoning Review Office at (410) 887-3391.

JT/1/693 Jan. 15 C515460

CERTIFICATE OF PUBLICATION

1/17, 2002

THIS IS TO CERTIFY, that the annexed advertisement was published in the following weekly newspaper published in Baltimore County, Md., once in each of 1 successive weeks, the first publication appearing on 1/15, 2002.

- ☒ The Jeffersonian
- ☐ Arbutus Times
- ☐ Catonsville Times
- ☐ Towson Times
- ☐ Owings Mills Times
- ☐ NE Booster/Reporter
- ☐ North County News

S. Wilson

LEGAL ADVERTISING

NOTICE OF ZONING HEARING

The Zoning Commissioner of Baltimore County, by authority of the Zoning Act and Regulations of Baltimore County will hold a public hearing in Towson, Maryland on the property identified herein as follows:

Case: #02-165-A
2323 York Road
E/S York Road, 82' S of Rose Street
8th Election District – 3rd Councilmanic District
Legal Owner(s): Frieda G. Schaefer
Contract Purchaser: John Mitcherling, Bad Dog Corp, T/A An Poitin Still

Variance: to allow 97 parking spaces in lieu of 119 spaces required. To allow standard angled parking spaces eight feet wide in lieu of 8.5 feet required. To allow parking aisle widths of 20 feet in lieu of 22 feet required. To allow a nine foot setback from parking to a street right-of-way in lieu of 10 feet required. To allow three percent of the parking lot to be internal islands in lieu of seven percent required. To allow parking islands 2.5 feet wide in lieu of nine feet required. To allow 6-inch setback parking-to-building in lieu of six feet required. To allow a freestanding enterprise sign with a non-contiguous reader-board. To allow a reader-board larger than 50% of an erected permitted enterprise sign. Any other variances deemed necessary by the zoning commissioner.

Hearing: Wednesday, January 30, 2002 at 11:00 a.m. in Room 407, County Courts Building, 401 Bosley Avenue.

LAWRENCE E. SCHMIDT
Zoning Commissioner for Baltimore County

NOTES: (1) Hearings are Handicapped Accessible; for special accommodations Please Contact the Zoning Commissioner's Office at (410) 887-4386.
(2) For information concerning the File and/or Hearing, Contact the Zoning Review Office at (410) 887-3391.

JT/1/693 Jan. 15 C515460

CERTIFICATE OF PUBLICATION

1/17, 2002

THIS IS TO CERTIFY, that the annexed advertisement was published in the following weekly newspaper published in Baltimore County, Md., once in each of 1 successive weeks, the first publication appearing on 1/15, 2002.

- ☒ The Jeffersonian
- ☐ Arbutus Times
- ☐ Catonsville Times
- ☐ Towson Times
- ☐ Owings Mills Times
- ☐ NE Booster/Reporter
- ☐ North County News

S. Wilkinson

LEGAL ADVERTISING

TO: PATUXENT PUBLISHING COMPANY
Tuesday, January 15, 2002 Issue – Jeffersonian

Please forward billing to:
F. Vernon Boozer
Covahey & Boozer
614 Bosley Avenue
Towson MD 21204

410 828-9441

NOTICE OF ZONING HEARING

The Zoning Commissioner of Baltimore County, by authority of the Zoning Act and Regulations of Baltimore County, will hold a public hearing in Towson, Maryland on the property identified herein as follows:

CASE NUMBER: 02-165-A
2323 York Road
E/S York Road, 82' S of Rose Street
8th Election District – 3rd Councilmanic District
Legal Owner: Frieda G Schaefer
Contract Purchaser: John Mitcherling, Bad Dog Corp, T/A An Poitin Still

Variance to allow 97 parking spaces in lieu of 119 spaces required. To allow standard angled parking spaces eight feet wide in lieu of 8.5 feet required. To allow parking aisle widths of 20 feet in lieu of 22 feet required., To allow a nine-foot setback from parking to a street right-of-way in lieu of 10 feet required. To allow three percent of the parking lot to be internal islands in lieu of seven percent required. To allow parking islands 2.5 feet wide in lieu of nine feet required. To allow 6-inch setback parking-to-building in lieu of six feet required. To allow a freestanding enterprise sin with a non-contiguous reader-board. To allow a reader-board larger than 50% of an erected permitted enterprise sign. Any other variances deemed necessary by the zoning commissioner.

HEARING: Wednesday, January 30, 2002 at 11:00 a.m. in Room 407, County Courts Building, 401 Bosley Avenue

NOTE CHANGE

Lawrence E. Schmidt

LAWRENCE E. SCHMIDT
ZONING COMMISSIONER FOR BALTIMORE COUNTY

NOTES: (1) HEARINGS ARE HANDICAPPED ACCESSIBLE; FOR SPECIAL ACCOMODATIONS, PLEASE CONTACT THE ZONING COMMISSIONER'S OFFICE AT 410-887-4386.
(2) FOR INFORMATION CONCERNING THE FILE AND/OR HEARING, CONTACT THE ZONING REVIEW OFFICE AT 410-887-3391.

1/17/02
Hoge
all
they must contact
petitioner &
get mutually
agreed date

GTTC

THE GREATER TIMONIUM COMMUNITY COUNCIL, INC.
P. O. BOX 276, 9B RIDGELY ROAD
TIMONIUM, MARYLAND 21093

January 14, 2002

Mr. Arnold Jablon
Director, Permits and Development Management
ATTN: Mr. George Zanner
111 West Chesapeake Avenue, Room 111
Towson, Maryland 21204

Dear Mr Jablon:

This is in reference to Zoning Commissioner's Hearing 02-165A, "An Poitin Stil".

We request that the date for this case, now scheduled for January 30, 2002, at 11:00AM, be postponed as we will be unable to attend due to a prior commitment. The Greater Timonium Community Council has an interest in this case which is in our area and would like very much to present information that is pertinent. The following are suggested dates when we could be available to participate:

February 5th, February 6th, February 11th or February 14th.

In the interest of allowing the current posting at the property to be valid, we could also be available on February 1st in the morning, if we are notified as soon as possible.

Thank you very much for your consideration.

Very truly yours,

Larry Townsend
Co-Chairman Zoning, Development and Legislative Committee

CC: Office of the Zoning Commissioner of Baltimore County

** Please reply on this issue only to: 1111 Longbrook Road,
Lutherville, Maryland 21093
410-321-8242

RECEIVED
02-178
JAN 17 2002
DEPT. OF PERMITS AND
DEVELOPMENT MANAGEMENT

File
Fro
2/20

GTTC

THE GREATER TIMONIUM COMMUNITY COUNCIL, INC.
P. O. BOX 276, 9B RIDGELY ROAD
TIMONIUM, MARYLAND 21093

January 14, 2002

Mr. Arnold Jablon
Director, Permits and Development Management
ATTN: Mr. George Zanner
111 West Chesapeake Avenue, Room 111
Towson, Maryland 21204

Dear Mr Jablon:

This is in reference to Zoning Commissioner's Hearing 02-165A, "An Poitin Stil".

We request that the date for this case, now scheduled for January 30, 2002, at 11:00AM, be postponed as we will be unable to attend due to a prior commitment. The Greater Timonium Community Council has an interest in this case which is in our area and would like very much to present information that is pertinent. The following are suggested dates when we could be available to participate:

February 5th, February 6th, February 11th or February 14th.

In the interest of allowing the current posting at the property to be valid, we could also be available on February 1st in the morning, if we are notified as soon as possible.

Thank you very much for your consideration.

Very truly yours,

Larry Townsend
Co-Chairman Zoning, Development and Legislative Committee

cc: Office of the Zoning Commissioner of Baltimore County

** Please reply on this issue only to: 1111 Longbrook Road,
Lutherville, Maryland 21093
410-321-8242

JAN 17

Baltimore County
Department of Permits and
Development Management

Director's Office
County Office Building
111 West Chesapeake Avenue
Towson, Maryland 21204
410-887-3353
Fax: 410-887-5708

December 27, 2001

F. Vernon Boozer
Covahey & Boozer
614 Bosley Avenue
Towson MD 21204

Dear Mr. Boozer:

RE: Case Number: 02-165-A, 2323 York Road

The above matter, previously scheduled for January 7, 2001 at 9:00 a.m., has been postponed at your request. Once the hearing has been rescheduled you will be notified by mail.

Please be advised that, as the individual requesting and receiving the postponement, the responsibility and costs associated with the appropriate posting of the property now lies with you. The petitioner or his/her agent may not personally post or change a zoning sign. One of the currently approved vendors/posters must be contacted to do so. If the property has been posted with notice of the original hearing date, as quickly as possible a notice of the new hearing date should be affixed to the sign(s).

Very truly yours,

Arnold Jablon GDZ
Director

AJ: gdz

C:

Printed with Soybean Ink
on Recycled Paper

Baltimore County
Department of Permits and
Development Management

Director's Office
County Office Building
111 West Chesapeake Avenue
Towson, Maryland 21204
410-887-3353
Fax: 410-887-5708

December 27, 2001

NOTICE OF ZONING HEARING

The Zoning Commissioner of Baltimore County, by authority of the Zoning Act and Regulations of Baltimore County, will hold a public hearing in Towson, Maryland on the property identified herein as follows:

CASE NUMBER: 02-165-A
2323 York Road
E/S York Road, 82' S of Rose Street
8th Election District – 3rd Councilmanic District
Legal Owner: Frieda G Schaefer
Contract Purchaser: John Mitcherling, Bad Dog Corp, T/A An Poitin Still

Variance to allow 97 parking spaces in lieu of 119 spaces required. To allow standard angled parking spaces eight feet wide in lieu of 8.5 feet required. To allow parking aisle widths of 20 feet in lieu of 22 feet required. To allow a nine-foot setback from parking to a street right-of-way in lieu of 10 feet required. To allow three percent of the parking lot to be internal islands in lieu of seven percent required. To allow parking islands 2.5 feet wide in lieu of nine feet required. To allow 6-inch setback parking-to-building in lieu of six feet required. To allow a freestanding enterprise sin with a non-contiguous reader-board. To allow a reader-board larger than 50% of an erected permitted enterprise sign. Any other variances deemed necessary by the zoning commissioner.

HEARING: Wednesday, January 30, 2002 at 11:00 a.m. in Room 407, County Courts Building, 401 Bosley Avenue

Arnold Jablon
Director

C: F. Vernon Boozer, Covahey & Boozer PA, 815 Bosley Avenue, Towson 21204
Frieda G. Schaefer c/o MNS Department 906, 10400 Fernwood Road, Bethesda 20817
John Mitcherling, Bad Dog Corp, 2323 York Road, Timonium 21093
D.S. Thaler & Associates, Inc, P O Box 47428, Baltimore 21244

NOTES: (1) **THE PETITIONER MUST HAVE THE ZONING NOTICE SIGN POSTED BY AN APPROVED POSTER ON THE PROPERTY BY TUESDAY, JANUARY 15, 2002.**
(2) HEARINGS ARE HANDICAPPED ACCESSIBLE; FOR SPECIAL ACCOMMODATIONS PLEASE CALL THE ZONING COMMISSIONER'S OFFICE AT 410-887-4386.
(3) FOR INFORMATION CONCERNING THE FILE AND/OR HEARING, CONTACT THE ZONING REVIEW OFFICE AT 410-887-3391.

Printed with Soybean Ink
on Recycled Paper

Baltimore County
Department of Permits and
Development Management

Director's Office
County Office Building
111 West Chesapeake Avenue
Towson, Maryland 21204
410-887-3353
Fax: 410-887-5708

December 27, 2001

NOTICE OF ZONING HEARING

The Zoning Commissioner of Baltimore County, by authority of the Zoning Act and Regulations of Baltimore County, will hold a public hearing in Towson, Maryland on the property identified herein as follows:

CASE NUMBER: 02-165-A
2323 York Road
E/S York Road, 82' S of Rose Street
8th Election District – 3rd Councilmanic District
Legal Owner: Frieda G Schaefer
Contract Purchaser: John Mitcherling, Bad Dog Corp, T/A An Poitin Still

Variance to allow 97 parking spaces in lieu of 119 spaces required. To allow standard angled parking spaces eight feet wide in lieu of 8.5 feet required. To allow parking aisle widths of 20 feet in lieu of 22 feet required. To allow a nine-foot setback from parking to a street right-of-way in lieu of 10 feet required. To allow three percent of the parking lot to be internal islands in lieu of seven percent required. To allow parking islands 2.5 feet wide in lieu of nine feet required. To allow 6-inch setback parking-to-building in lieu of six feet required. To allow a freestanding enterprise sin with a non-contiguous reader-board. To allow a reader-board larger than 50% of an erected permitted enterprise sign. Any other variances deemed necessary by the zoning commissioner.

HEARING: Wednesday, January 30, 2002 at 9:00 a.m. in Room 407, County Courts Building, 401 Bosley Avenue

Arnold Jablon CDZ
Director

C: F. Vernon Boozer, Covahey & Boozer PA, 815 Bosley Avenue, Towson 21204
Frieda G. Schaefer c/o MNS Department 906, 10400 Fernwood Road, Bethesda 20817
John Mitcherling, Bad Dog Corp, 2323 York Road, Timonium 21093
D.S. Thaler & Associates, Inc, P O Box 47428, Baltimore 21244

NOTES: (1) **THE PETITIONER MUST HAVE THE ZONING NOTICE SIGN POSTED BY AN APPROVED POSTER ON THE PROPERTY BY TUESDAY, JANUARY 15, 2002.**
(2) HEARINGS ARE HANDICAPPED ACCESSIBLE; FOR SPECIAL ACCOMMODATIONS PLEASE CALL THE ZONING COMMISSIONER'S OFFICE AT 410-887-4386.
(3) FOR INFORMATION CONCERNING THE FILE AND/OR HEARING, CONTACT THE ZONING REVIEW OFFICE AT 410-887-3391.

Printed with Soybean Ink

NOTICE OF ZONING HEARING

The Zoning Commissioner of Baltimore County, by authority of the Zoning Act and Regulations of Baltimore County will hold a public hearing in Towson, Maryland on the property identified herein as follows:

Case: #02-165-A
2323 York Road
E/S York Road, 82' S of Rose Street
8th Election District – 3rd Councilmanic District
Legal Owner(s): Frieda G. Schaefer
Contract Purchaser: John Mitcherling, Bad Dog Corp., T/A An Poitin Stil

Variance: to allow 97 parking spaces in lieu of 119 spaces required. To allow standard angled parking spaces eight feet wide in lieu of 8.5' required. To allow parking aisle widths of 20 feet in lieu of 22 feet required. To allow a nine foot setback from parking to a street right-of-way in lieu of 10 feet required. To allow three percent of the parking lot to be internal islands in lieu of seven percent required. To allow parking islands 2.5 feet wide in lieu of nine feet required. To allow 6 inch setback parking-to building in lieu of six feet required. To allow a free-standing enterprise sign with a non-contiguous reader-board. To allow a reader-board larger than 50% of an erected permitted enterprise sign. Any other Variances deemed necessary by the Zoning Commissioner.

Hearing: Thursday, December 27, 2001 at 9:00 a.m. in Room 407, County Courts Building, 401 Bosley Avenue.

LAWRENCE E. SCHMIDT
Zoning Commissioner for Baltimore County

NOTES: (1) Hearings are Handicapped Accessible; for special accommodations Please Contact the Zoning Commissioner's Office at (410) 887-4386.
(2) For information concerning the File and/or Hearing, Contact the Zoning Review Office at (410) 887-3391.

JT/12/626 Dec. 11 C510597

CERTIFICATE OF PUBLICATION

12/14/, 2001

THIS IS TO CERTIFY, that the annexed advertisement was published in the following weekly newspaper published in Baltimore County, Md., once in each of 1 successive weeks, the first publication appearing on 12/11/, 2001.

- [x] The Jeffersonian
- [ ] Arbutus Times
- [ ] Catonsville Times
- [ ] Towson Times
- [ ] Owings Mills Times
- [ ] NE Booster/Reporter
- [ ] North County News

S. Wilkinson

LEGAL ADVERTISING

NOTICE OF ZONING HEARING

The Zoning Commissioner of Baltimore County, by authority of the Zoning Act and Regulations of Baltimore County will hold a public hearing in Towson, Maryland on the property identified herein as follows:

Case: #02-165-A
2323 York Road
E/S York Road, 82' S of Rose Street
8th Election District – 3rd Councilmanic District
Legal Owner(s): Frieda G. Schaefer
Contract Purchaser: John Mitcherling, Bad Dog Corp., T/A An Poitin Stil

Variance: to allow 97 parking spaces in lieu of 119 spaces required. To allow standard angled parking spaces eight feet wide in lieu of 8.5' required. To allow parking aisle widths of 20 feet in lieu of 22 feet required. To allow a nine foot setback from parking to a street right-of-way in lieu of 10 feet required. To allow three percent of the parking lot to be internal islands in lieu of seven percent required. To allow parking islands 2.5 feet wide in lieu of nine feet required. To allow 6 inch setback parking-to building in lieu of six feet required. To allow a free-standing enterprise sign with a non-contiguous reader-board. To allow a reader-board larger than 50% of an erected permitted enterprise sign. Any other Variances deemed necessary by the Zoning Commissioner.

Hearing: Thursday, December 27, 2001 at 9:00 a.m. in Room 407, County Courts Building, 401 Bosley Avenue.

LAWRENCE E. SCHMIDT
Zoning Commissioner for Baltimore County.

NOTES: (1) Hearings are Handicapped Accessible; for special accommodations Please Contact the Zoning Commissioner's Office at (410) 887-4386.

(2) For information concerning the File and/or Hearing, Contact the Zoning Review Office at (410) 887-3391.

JT/12/626 Dec. 11 C510597

CERTIFICATE OF PUBLICATION

12/14/, 2001

THIS IS TO CERTIFY, that the annexed advertisement was published in the following weekly newspaper published in Baltimore County, Md., once in each of 1 successive weeks, the first publication appearing on 12/11/, 2001.

- [x] The Jeffersonian
- [ ] Arbutus Times
- [ ] Catonsville Times
- [ ] Towson Times
- [ ] Owings Mills Times
- [ ] NE Booster/Reporter
- [ ] North County News

S. Wilkinson

LEGAL ADVERTISING

same as 01-417/GZ

COVAHEY & BOOZER, P. A.

ATTORNEYS AT LAW

614 BOSLEY AVENUE

TOWSON, MARYLAND 21204

AREA CODE 410

828-9441

FAX 410-823-7530

EDWARD C. COVAHEY, JR.
F. VERNON BOOZER *
MARK S. DEVAN
THOMAS P. DORE
MICHAEL T. PATE
STACIE D. TRAGESER

* ALSO ADMITTED TO D. C. BAR

ANNEX OFFICE
SUITE 302
606 BALTIMORE AVE.
TOWSON, MD 21204

December 13, 2001

Mr. Arnold Jablon, Director
Baltimore County
Department of Permits and
Development Management
County Office Building
111 West Chesapeake Avenue
Towson, MD 21204

VIA FACSIMILE - 410-887-2824
& FIRST CLASS MAIL

RE: Case No. 02-165-A
2323 York Road
Hearing – 1/7/01, 10:00 am
Room 407

Dear Mr. Jablon:

Please be advised that this office represents Bad Dog Corp. in the above captioned matter. Pursuant to my secretary's telephone conversation with Mr. Zahner in your office, I hereby request a postponement of this matter as I have a previously scheduled trial (State v. Riffee) in the District Court in Chestertown, Maryland on January 7th, 2001, at 9:00 am.

I would further request if convenient, to please contact my office to arrange for an agreed date since my Court calendar is quite full.

Thank you for your attention t this matter. If you have any questions, do not hesitate to contact my office.

Very truly yours,

F. VERNON BOOZER

cc: Ms. Frieda G. Schaefer
Bad Dog Corp.
D.S. Thaler & Associates, Inc.

1213gab01

TO: PATUXENT PUBLISHING COMPANY
Tuesday, December 11, 2001 Issue – Jeffersonian

Please forward billing to:
John Mitcherling 410 828-9441
Bad Dog Corp, T/A An Poitin Stil
2323 York Road
Timonium MD 21093

NOTICE OF ZONING HEARING

The Zoning Commissioner of Baltimore County, by authority of the Zoning Act and Regulations of Baltimore County, will hold a public hearing in Towson, Maryland on the property identified herein as follows:

CASE NUMBER: 02-165-A
2323 York Road
E/S York Road, 82' S of Rose Street
8th Election District – 3rd Councilmanic District
Legal Owner: Frieda G Schaefer
Contract Purchaser: John Mitcherling, Bad Dog Corp, T/A An Poitin Stil

Variance to allow 97 parking spaces in lieu of 119 spaces required. To allow standard angled parking spaces eight feet wide in lieu of 8.5' required. To allow parking aisle widths of 20 feet in lieu of 22 feet required. To allow a nine foot setback from parking to a street right-of-way in lieu of 10 feet required. To allow three percent of the parking lot to be internal islands in lieu of seven percent required. To allow parking islands 2.5 feet wide in lieu of nine feet required. To allow 6 inch setback parking-to-building in lieu of six feet required. To allow a free-standing enterprise sign with a non-contiguous reader-board. To allow a reader-board larger than 50% of an erected permitted enterprise sign. Any other Variances deemed necessary by the Zoning Commissioner.

HEARING: Thursday, December 27, 2001 at 9:00 a.m. in Room 407, County Courts Building, 401 Bosley Avenue

Lawrence E. Schmidt GDZ

LAWRENCE E. SCHMIDT
ZONING COMMISSIONER FOR BALTIMORE COUNTY

NOTES: (1) HEARINGS ARE HANDICAPPED ACCESSIBLE; FOR SPECIAL ACCOMODATIONS, PLEASE CONTACT THE ZONING COMMISSIONER'S OFFICE AT 410-887-4386.
(2) FOR INFORMATION CONCERNING THE FILE AND/OR HEARING, CONTACT THE ZONING REVIEW OFFICE AT 410-887-3391.

Baltimore County
Department of Permits and
Development Management

Director's Office
County Office Building
111 West Chesapeake Avenue
Towson, Maryland 21204
410-887-3353
Fax: 410-887-5708

December 11, 2001

NOTICE OF ZONING HEARING

The Zoning Commissioner of Baltimore County, by authority of the Zoning Act and Regulations of Baltimore County, will hold a public hearing in Towson, Maryland on the property identified herein as follows:

CASE NUMBER: 02-165-A
2323 York Road
E/S York Road, 82' S of Rose Street
8th Election District – 3rd Councilmanic District
Legal Owner: Frieda G Schaefer
Contract Purchaser: John Mitcherling, Bad Dog Corp, T/A An Poitin Stil

Variance to allow 97 parking spaces in lieu of 119 spaces required. To allow standard angled parking spaces eight feet wide in lieu of 8.5' required. To allow parking aisle widths of 20 feet in lieu of 22 feet required. To allow a nine foot setback from parking to a street right-of-way in lieu of 10 feet required. To allow three percent of the parking lot to be internal islands in lieu of seven percent required. To allow parking islands 2.5 feet wide in lieu of nine feet required. To allow 6 inch setback parking-to-building in lieu of six feet required. To allow a free-standing enterprise sign with a non-contiguous reader-board. To allow a reader-board larger than 50% of an erected permitted enterprise sign. Any other Variances deemed necessary by the Zoning Commissioner.

HEARING: Monday, January 7, 2001 2002 at 10:00 a.m. in Room 407, County Courts Building, 401 Bosley Avenue

Arnold Jablon GDZ
Director

C: F. Vernon Boozer, Covahey & Boozer PA, 614 Bosley Avenue, Towson 21204
Frieda G. Schaefer c/o MNS Department 906, 10400 Fernwood Road, Bethesda 20817
John Mitcherling, Bad Dog Corp, 2323 York Road, Timonium 21093
D. S. Thaler & Associates Inc, P O Box 47428, Baltimore 21244

NOTES: (1) **THE PETITIONER MUST HAVE THE ZONING NOTICE SIGN POSTED BY AN APPROVED POSTER ON THE PROPERTY BY THURSDAY, DECEMBER 22, 2001.**
(2) HEARINGS ARE HANDICAPPED ACCESSIBLE; FOR SPECIAL ACCOMMODATIONS PLEASE CALL THE ZONING COMMISSIONER'S OFFICE AT 410-887-4386.
(3) FOR INFORMATION CONCERNING THE FILE AND/OR HEARING, CONTACT THE ZONING REVIEW OFFICE AT 410-887-3391.

Printed with Soybean Ink
on Recycled Paper

RE: PETITION FOR VARIANCE 2323 York Road, E/S York Rd, 82' S of Rose St 8th Election District, 3rd Councilmanic	*	BEFORE THE
	*	ZONING COMMISSIONER
	*	FOR
Legal Owner: Frieda G. Schaefer Contract Purchaser: Bad Dog Corp., T/A An Poitin Stil Petitioner(s)	*	BALTIMORE COUNTY
	*	Case No. 02-165-A

* * * * * * * * * * * * * *

ENTRY OF APPEARANCE

Please enter the appearance of the People's Counsel in the above-captioned matter. Notice should be sent of any hearing dates or other proceedings in this matter and of the passage of any preliminary or final Order. **All parties should copy People's Counsel on all correspondence sent/ documentation filed in the case.**

Peter Max Zimmerman

PETER MAX ZIMMERMAN
People's Counsel for Baltimore County

Carole S. Demilio

CAROLE S. DEMILIO
Deputy People's Counsel
Old Courthouse, Room 47
400 Washington Avenue
Towson, MD 21204
(410) 887-2188

CERTIFICATE OF SERVICE

I HEREBY CERTIFY that on this 10th day of December, 2001 a copy of the foregoing Entry of Appearance was mailed to F. Vernon Boozer, Esq., Covahey & Boozer, 614 Bosley Avenue, Towson, MD 21204, attorney for Petitioner(s).

Peter Max Zimmerman

PETER MAX ZIMMERMAN

Baltimore County
Department of Permits and
Development Management

Director's Office
County Office Building
111 West Chesapeake Avenue
Towson, Maryland 21204
410-887-3353
Fax: 410-887-5708

November 28, 2001

NOTICE OF ZONING HEARING

The Zoning Commissioner of Baltimore County, by authority of the Zoning Act and Regulations of Baltimore County, will hold a public hearing in Towson, Maryland on the property identified herein as follows:

CASE NUMBER: 02-165-A
2323 York Road
E/S York Road, 82' S of Rose Street
8th Election District – 3rd Councilmanic District
Legal Owner: Frieda G Schaefer
Contract Purchaser: John Mitcherling, Bad Dog Corp, T/A An Poitin Stil

Variance to allow 97 parking spaces in lieu of 119 spaces required. To allow standard angled parking spaces eight feet wide in lieu of 8.5' required. To allow parking aisle widths of 20 feet in lieu of 22 feet required. To allow a nine foot setback from parking to a street right-of-way in lieu of 10 feet required. To allow three percent of the parking lot to be internal islands in lieu of seven percent required. To allow parking islands 2.5 feet wide in lieu of nine feet required. To allow 6 inch setback parking-to-building in lieu of six feet required. To allow a free-standing enterprise sign with a non-contiguous reader-board. To allow a reader-board larger than 50% of an erected permitted enterprise sign. Any other Variances deemed necessary by the Zoning Commissioner.

HEARING: Thursday, December 27, 2001 at 9:00 a.m. in Room 407, County Courts Building, 401 Bosley Avenue

Arnold Jablon GDZ
Director

C: F. Vernon Boozer, Covahey & Boozer PA, 614 Bosley Avenue, Towson 21204
Frieda G. Schaefer c/o MNS Department 906, 10400 Fernwood Road, Bethesda 20817
John Mitcherling, Bad Dog Corp, 2323 York Road, Timonium 21093
D. S. Thaler & Associates Inc, P O Box 47428, Baltimore 21244

NOTES: (1) **THE PETITIONER MUST HAVE THE ZONING NOTICE SIGN POSTED BY AN APPROVED POSTER ON THE PROPERTY BY WEDNESDAY, DECEMBER 12, 2001.**
(2) HEARINGS ARE HANDICAPPED ACCESSIBLE; FOR SPECIAL ACCOMMODATIONS PLEASE CALL THE ZONING COMMISSIONER'S OFFICE AT 410-887-4386.
(3) FOR INFORMATION CONCERNING THE FILE AND/OR HEARING, CONTACT THE ZONING REVIEW OFFICE AT 410-887-3391.

Printed with Soybean Ink
on Recycled Paper

COVAHEY & BOOZER, P. A.
ATTORNEYS AT LAW
614 BOSLEY AVENUE
TOWSON, MARYLAND 21204
AREA CODE 410
828-9441

FAX 410-823-7530

EDWARD C. COVAHEY, JR.
F. VERNON BOOZER *
MARK S. DEVAN
THOMAS P. DORE
MICHAEL T. PATE
STACIE D. TRAGESER

* ALSO ADMITTED TO D. C. BAR

ANNEX OFFICE
SUITE 302
606 BALTIMORE AVE.
TOWSON, MD 21204

November 13, 2001

Hand Delivered

Ms. Patricia M. Farr
Program Supervisor
Environmental Impact Review
Baltimore County Department of Environmental
Protection and Resource Management
401 Bosley Avenue, St. 416
Towson, MD 21204

RE: An Poiti Stil
2323 York Road
Permit Application B456717

Dear Ms. Farr:

Enclosed please find your original letter of 11/6/01 which has been executed by my client, together with the executed Declaration of Protective Covenants, Conditions and Restrictions in connection with the above captioned matter.

Thank you for your attention and cooperation in this matter. We would appreciate any action to expedite the issuance of the building permit.

Very truly yours,

F. VERNON BOOZER

Enclosures
cc: An Poitin Stil
1113gab10

DEPARTMENT OF PERMITS AND DEVELOPMENT MANAGEMENT
ZONING REVIEW

ADVERTISING REQUIREMENTS AND PROCEDURES FOR ZONING HEARINGS

The Baltimore County Zoning Regulations (BCZR) require that notice be given to the general public/neighboring property owners relative to property which is the subject of an upcoming zoning hearing. For those petitions which require a public hearing, this notice is accomplished by posting a sign on the property (responsibility of the petitioner) and placement of a notice in a newspaper of general circulation in the County, both at least fifteen (15) days before the hearing.

Zoning Review will ensure that the legal requirements for advertising are satisfied. However, the petitioner is responsible for the costs associated with these requirements. The newspaper will bill the person listed below for the advertising. This advertising is due upon receipt and should be remitted directly to the newspaper.

OPINIONS MAY NOT BE ISSUED UNTIL ALL ADVERTISING COSTS ARE PAID.

For Newspaper Advertising:

Item Number or Case Number: 02-165-A

Petitioner: Frieda G. Schaefer (Bad Dog Corporation, t/a Poitin Still, Lessee)

Address or Location: 2323 York Road

PLEASE FORWARD ADVERTISING BILL TO:

Name: BAd DOG CORPORATION T/A AN poitiN StiL

Address: 2323 YORK RD
Timonium, Md 21093

Telephone Number: 410-828-9441

Revised 2/20/98 - SCJ

Petition for Variance

to the Zoning Commissioner of Baltimore County

for the property located at 2323 YORK ROAD, TIMONIUM, MD 21093

which is presently zoned BL

This Petition shall be filed with the Department of Permits and Development Management. The undersigned, legal owner(s) of the property situate in Baltimore County and which is described in the description and plat attached hereto and made a part hereof, hereby petition for a Variance from Section(s)

SEE ATTACHED VARIANCE REQUESTS

of the Zoning Regulations of Baltimore County, to the zoning law of Baltimore County, for the following reasons: (indicate hardship or practical difficulty)

SEE ATTCHED LETTER OF 8/21/01 FROM D.S. THALER & ASSOCIATES, INC., ITEMS 1 THROUGH 6

Property is to be posted and advertised as prescribed by the zoning regulations.
I, or we, agree to pay expenses of above Variance, advertising, posting, etc. and further agree to and are to be bounded by the zoning regulations and restrictions of Baltimore County adopted pursuant to the zoning law for Baltimore County.

I/We do solemnly declare and affirm, under the penalties of perjury, that I/we are the legal owner(s) of the property which is the subject of this Petition.

Contract Purchaser/Lessee:

BAD DOG CORPORATION, T/A AN POITIN STIL
Name - Type or Print

Signature

2323 YORK ROAD — 410-828-9441
Address — Telephone No.

TIMONIUM, MD 21093
City — State — Zip Code

Attorney For Petitioner:

F. VERNON BOOZER
Name - Type or Print

Signature

COVAHEY & BOOZER, P.A.
Company

614 BOSLEY AVENUE — 410-828-9441
Address — Telephone No.

TOWSON, MD 21204
City — State — Zip Code

Legal Owner(s):

FRIEDA G. SCHAEFER
Name - Type or Print

Signature

Name - Type or Print

Signature

C/O MNS DEPARTMENT 906
10400 FERNWOOD ROAD — 410-252-7675
Address — Telephone No.

BETHESDA, MD 20817-1109
City — State — Zip Code

Representative to be Contacted:

D.S. THALER & ASSOCIATES, INC.
Name

PO BOX 47428 — (410)944-3647
Address — Telephone No.

BALTO., MD 21244
City — State — Zip Code

ATTN: STACEY MCARTHUR

OFFICE USE ONLY

ESTIMATED LENGTH OF HEARING _____

UNAVAILABLE FOR HEARING _____

Reviewed By JNP Date 6/22/01

Case No. 02-165-A

ORDER RECEIVED FOR FILING
Date 3/7/02
By
RZV 9/15/98

BALTIMORE COUNTY, MARYLAND
OFFICE OF BUDGET & FINANCE
MISCELLANEOUS RECEIPT

No. 06621

DATE 10/22/01 ACCOUNT R-001-006-6150

AMOUNT $ 250.00

RECEIVED FROM: Frieda Schaefer (Petitioner-Legal Owner)

FOR: 2323 York Road 02-165-A
Variance

DISTRIBUTION
WHITE - CASHIER PINK - AGENCY YELLOW - CUSTOMER

PAID RECEIPT

PAYMENT	ACTUAL	TIME
10/23/2001	10/22/2001	15:20:19

REG WS01 CASHIER JRIC JMR DRAWER 1
>>RECEIPT # 068636 OFLN
Dept 5 528 ZONING VERIFICATION
CR NO. 006621
Recpt Tot 250.00
250.00 CK .00 CA
Baltimore County, Maryland

CASHIER'S VALIDATION

VARIANCE REQUESTS

VARIANCES ARE REFERENCED IN THE PLAN AND DETAILS BY NUMBER AND LETTER OF THE REQUEST IN THE FOLLOWING MANNER: 5a

1. From Section 409.6.2. of the Baltimore County Zoning Regulations (BCZR) -

   To allow the existing 97 parking spaces in lieu of 119 spaces required.

2. From Section 409.3 (BCZR) -

   To allow standard angled parking spaces eight feet (8') wide in lieu of 8.5 feet required.

3. From Section 409.4.C. (BCZR) -

   To allow parking aisle widths of 20 feet in lieu of 22 feet required.

4. From Section 409.8.A.4. (BCZR) -

   To allow a nine foot (9') setback from parking to a street right-of-way in lieu of 10 feet required.

5. From Section 409.8.A.1. (BCZR) and the Baltimore County Landscape Manual as follows:

   a. Part III. B.2.a.

      To allow three (3) percent of the parking lot to be internal islands in lieu of seven percent (7%) required.

   b. Part III. B.2.c.

      To allow parking islands 2.5 feet wide in lieu of nine feet (9') required.

   c. Part III. B.2.d.

      To allow six inch (6") setback parking-to-building in lieu of six feet (6') required.

6. From Section 450.7.B.1. BCZR -

   To allow a free-standing enterprise sign with a non-contiguous reader-board.

7. From Section 450.7.B.2. BCZR -

   To allow a reader-board of 71.1% (32 SF per face) in lieu of the required 50% (22.5 SF per face) of an erected permitted enterprise sign.

8. And any other variances deemed necessary by the Zoning Commissioner.

ORDER RECEIVED FOR FILING
Date 3/7/02
By

October 17, 2001

2323 YORK ROAD
ZONING DESCRIPTION

Beginning at a point on the east side of York Road (Maryland Route 45) (80' wide), said point being southerly 82 feet, more or less, from the centerline of Rose Street (40' wide) thence running the following courses and distances:

1. South 18°16'52" East 253.63 feet, more or less, to a point; thence,
2. South 89°23'17" East 71.82 feet, more or less, to a point; thence,
3. North 43°06'43" East 315.85 feet, more or less, to a point; thence,
4. North 15°45'43" East 151.77 feet, more or less, to a point; thence,
5. South 71°42'18" West 430.21 feet, more or less, to the point of beginning.

Containing 79,192 square feet or 1.82 acres of land, more or less.

Known as 2323 York Road located in the 8th Election District and 3rd Council District of Baltimore County, Maryland.

STATE OF MARYLAND
BERNARD F. LINSENMEYER
No. 5403
REGISTERED
PROPERTY LINE SURVEYOR

H:\CORRESPONDENCE\PROJECTS\YORK ROAD 2323\DESCRIPTION FOR ZONING 2323 YORK ROAD BL GF 10 17 01.DOC

02-165-A

COURT
AVENUE
TALBOTT
ROAD
ROUTE 150
HIGHVIEW
STREET
ROAD
YORKVIEW
DRIVE
BROWEL
COURT
AREA UP

Pet #5

Elevator shafts or stairwells at each floor;

Attic space (whether or not a floor is laid) with structural headroom of seven feet or more;

Floor space of interior balconies or mezzanines;

Except in an 0-2 Zone, above-grade floor space used for accessory off-street parking spaces; [Bill No. 126-1986] and

Any other floor space not specifically excluded.

The adjusted gross floor area of a building shall not include:

Water tanks, cooling towers or elevator or stair bulkheads;

Uncovered steps;

Attic space with structural headroom of less than seven feet;

Floor space on exterior unenclosed balconies, terraces or other open areas;

Below-grade floor space upon which are situated accessory heating or air conditioning plants or other accessory mechanical or electrical utility equipment; and

Below-grade floor space used for accessory off-street parking spaces.

As used in this definition, the terms "above-grade" and "below-grade" shall refer to the grade of the street to which the major pedestrian access is established, at the place of access. [Bill No. 111-1968]

FLOOR AREA, GROSS -- The sum of the gross horizontal areas of all floors of a building, measured from the exterior faces of exterior walls and from the center line of walls separating two or more buildings, but not including floor space used for off-street parking, or any space where the floor-to-ceiling height is less than six feet. This term does not include any floor space in a basement or cellar which is used exclusively for storage or upon which are situated accessory heating or air conditioning equipment or other accessory mechanical or electrical utility equipment, nor does it include any floor space in an atrium or lobby which is not leasable to or occupied by individual tenants. [Bill No. 26-1988]

FLOOR AREA RATIO -- The total adjusted gross floor area of buildings on a site divided by the gross area of the site. [Bill Nos. 56-1961; 111-1968]

FREEWAY -- A motorway or portion thereof which: is, or is intended, for both intra- and inter-metropolitan travel; has or is intended to have a center median strip and a total of four or more lanes for moving traffic; is designed or intended for traffic speeds of at least 60 miles per hour; has no access to abutting private property; has no grade intersections with other

Pa
6a

Pat 6/2

PANEL BP1003M

TIME: 11:46:25 AUTOMATED PERMIT TRACKING SYSTEM LAST UPDATE 07/17/2001
DATE: 12/09/2002 GENERAL PERMIT APPLICATION DATA PLC 08:48:59

PCL

PERMIT #: B456717 PROPERTY ADDRESS
RECEIPT #: A432050 2323 YORK RD
CONTROL #: C- SUBDIV: 600 S TALBOTT AVE
XREF #: B456717 TAX ACCOUNT #: 0819009700 DISTRICT/PRECINCT 08 11

OWNERS INFORMATION (LAST, FIRST)
FEE: 157.00 NAME: SCHAEFER, FRIEDA AND ALBERT C/HMS DEPT #906
PAID: 157.00 ADDR: 10400 FERNWOOD RD., BETHESDA, MD 20817-1109
PAID BY: APPL

DATES APPLICANT INFORMATION
APPLIED: 07/17/2001 NAME: VINCENT A. BRADEN
ISSUED: 11/16/2001 COMPANY: JOHN THOMAS BROWN CONTRACTING
OCCPNCY: 08/19/2002 ADDR1: 2121 COCKEPUR RD
ADDR2: BALTIMORE, MD 21220
INSPECTOR: 08C PHONE #: 410-686-8773 LICENSE #: 24321
NOTES: EDW/VLC

PASSWORD :

ENTER - PERMIT DETAIL PF3 - INSPECTIONS PF7 - DELETE PF9 - SAVE
PF2 - APPROVALS PF4 - ISSUE PERMIT PF8 - NEXT PERMIT PF10 - INQRY

PANEL BP1004M

TIME: 11:47:47 AUTOMATED PERMIT TRACKING SYSTEM LAST UPDATE 07/17/2001
DATE: 12/09/2002 BUILDING DETAIL 1 PLC 09:11:46

DRC#
PERMIT # B456717 PLANS: CONST 0 PLOT 8 PLAT 0 DATA 0 EL 1 PL 1

TENANT
BUILDING CODE: 2 CONTR: JOHN THOMAS BROWN CONTRACTING
IMPRV 3 ENGNR:
USE 19 SELLR:

FOUNDATION BASE WORK: REMOVE RETAINING WALL AND CONSTRUCT ADDITION
ONTO SIDE OF EXISTING RESTAURANT. TO BE USED
CONSTRUC FUEL SEWAGE WATER AS DINING AREA AND RESTROOM.
2 1E 1E 11'X54'X14'7"=594SF WAIVE CONSTRUCTION PLANS
CENTRAL AIR PER RSW.
ESTIMATED COST
20,000.00 PROPOSED USE: RESTAURANT AND ADDITION
OWNERSHIP: 1 EXISTING USE: RESTAURANT
RESIDENTIAL CAT:
$EFF: $1BED: $2BED: $3BED: 1OT BED: 1OT APTS:
1 FAMILY BEDROOMS: PASSWORD:

ENTER - NEXT DETAIL PF2 - APPROVALS PF7 - PREV. SCREEN PF9 - SAVE
PF1 - GENERAL PERMIT PF3 - INSPECTIONS PF8 - NEXT SCREEN CLEAR - MENU

PANEL BP1005M

TIME: 11:47:59 AUTOMATED PERMIT TRACKING SYSTEM LAST UPDATE 07/17/2001
DATE: 12/09/2002 BUILDING DETAIL 2 PLC 09:11:46

PERMIT #: B456717

BUILDING SIZE
FLOOR: 594
WIDTH: 11'
DEPTH: 54'
HEIGHT: 14'
STORIES: 1

LOT SIZE AND SETBACKS
SIZE: 0255.33 X 0000.00
FRONT STREET:
SIDE STREET:
FRONT SETB: NC
SIDE SETB: 89'/NC
SIDE STR SETB:
REAR SETB: 222'

GARBAGE DISP:
POWDER ROOMS:
BATHROOMS:
KITCHENS:

LOT NOS:
CORNER LOT:

ZONING INFORMATION
DISTRICT:
BLOCK:

ASSESSMENTS
LAND: [illegible]

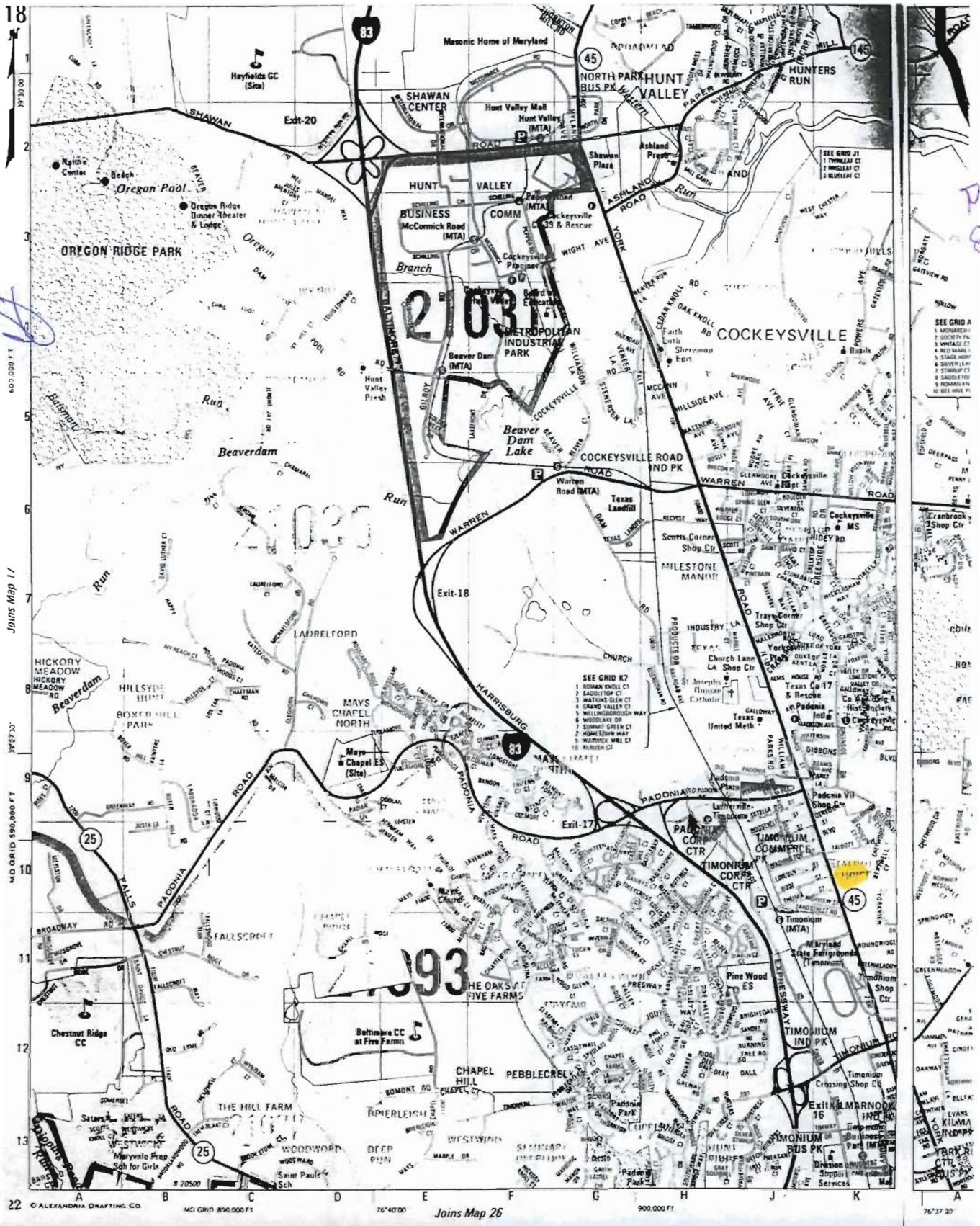

PC. Exh 6

[redacted]

Maryland Department of Assessments and Taxation
BALTIMORE COUNTY
Real Property Data Search

Go Back
View Map
New Search

Account Identifier: **District** - 08 **Account Number** - 0819009700

Owner Information

Owner Name: SCHAEFER ALBERT P
SCHAEFER FRIEDA G

Use: COMMERCIAL

Principal Residence: NO

Mailing Address: C/O HMS DEPT #906
10400 FERNWOOD RD
BETHESDA MD 20817-1109

Deed Reference: 1) / 3346/ 154
2)

Location & Structure Information

Premises Address	Zoning	Legal Description
2323 YORK RD	BL-MR	1.788 AC ES YORK RD 600 S TALBOTT AVE

Map	Grid	Parcel	Sub District	Subdivision	Section	Block	Lot	Group	Plat No:
51	23	117						81	Plat Ref:

Special Tax Areas **Town** **Ad Valorem** **Tax Class**

Primary Structure Built	Enclosed Area	Property Land Area	County Use
1989	5,521 SF	1.79 AC	06

Stories	Basement	Type	Exterior

Value Information

	Base Value	Value As Of 01/01/2002	Phase-in Assessments As Of 07/01/2002	As Of 07/01/2003
Land:	589,600	736,400		
Improvements:	541,900	593,900		
Total:	1,131,500	1,330,300	1,197,766	1,264,032
Preferential Land:	0	0	0	0

Transfer Information

Seller:	SMITH JOSEPH E JR ET AL	**Date:**	05/13/1958	**Price:**	$30,500
Type:	IMPROVED ARMS-LENGTH	**Deed1:**	/ 3346/ 154	**Deed2:**	
Seller:		**Date:**		**Price:**	
Type:		**Deed1:**		**Deed2:**	
Seller:		**Date:**		**Price:**	
Type:		**Deed1:**		**Deed2:**	

Exemption Information

PC8 cd-142

BALTIMORE COUNTY, MARYLAND

INTER-OFFICE CORRESPONDENCE

TO: Arnold Jablon, Director
Department of Permits and
Development Management

DATE: January 15, 2002

FROM: Arnold F. 'Pat' Keller, III
Director, Office of Planning

SUBJECT: 2323 York Road

INFORMATION:

Item Number: 165

Petitioner: Bad Dog Corporation, T/A An Pointin Still

Zoning: BL

Requested Action: Variances

SUMMARY OF RECOMMENDATIONS:

The Office of Planning is concerned about the number of variances being requested in the subject matter. The applicant requests variance relief from the number of spaces to be provided, width of parking spaces, reduction in required distance to the right-of-way, and from requirements of the Baltimore County Landscape Manual. The County and State have invested considerably in the upgrading and improvement of York Road and in no instance should landscaping and planting areas be reduced along the corridor. In fact, if at all possible these areas should be increased. The impact of the combined requested relief could result in a negative impact to adjacent properties.

In some instances it would appear that the relief requested ignores current trends. For example, requested relief from parking space width appears to be at odds with continuing consumer preference for larger motor vehicles.

Whenever a number of variances are necessary to accommodate a use, it suggests that the site is being overdeveloped. Planning staff is very familiar with the subject property, and it is clear that "The Still" is a popular establishment where on-site parking is often scarce.

Information should be provided to the Zoning Commissioner at the time of hearing regarding all existing and proposed parking agreements. While the Office of Planning does not want to discourage successful existing businesses from expanding, it is important that the applicant demonstrate that the development can be accommodated on the site and that parking needs can be met.

Section 409
Off-Street Parking and Loading
[Bill Nos. 26-1988; 36-1988]

409.1 Applicability.

A. All structures built and all uses established hereafter shall provide accessory off-street parking and loading in accordance with the following regulations. When an existing structure or use is enlarged, accessory off-street parking and loading shall be provided in accordance with the following regulations for the area or capacity of such enlargement.

B. Those projects which have County Review Group (CRG) approval prior to the effective date of these regulations may modify their plans to satisfy these regulations or may proceed under the regulations in effect at the time of said approval.

C. Those projects for which a building permit has been submitted but not approved may modify their plans to satisfy these regulations or proceed under the regulations in effect at the time of said submittal.

409.2 Plan. At the time of application for a building permit for the erection or enlargement of any building for which off-street parking or loading spaces are required, a plan shall be provided at an appropriate level of detail showing such parking or loading spaces, including the means of access and interior circulation both from the standpoint of the project itself and in relation to its surroundings.

409.3 Parking space dimensions. Minimum off-street parking space dimensions shall be as follows:

	Angled Parking (feet)	**Parallel Parking (feet)**
Standard space	8½ x 18	7½ x 21
Small car space	7½ x 16	7½ x 18

Small car spaces shall be designated as such and clearly marked to indicate the intended use.

409.4 Access to parking spaces. Vehicular travelways in off-street parking facilities where the parking spaces are located in parking bays or parking lanes shall be divided into driveways, with no direct access to parking spaces, and aisles, providing direct access to adjoining parking spaces.

A. Driveways shall be at least 12 feet in width for one-way movements and at least 20 feet in width for two-way movements.

B. All parking spaces shall adjoin and have direct access to an aisle, except in the following cases:

GREATER TIMONIUM COMMUNITY COUNCIL, INC.

9B Ridgely Road, Box 276
Timonium, Md. 21093

RESOLVED: That the position of the Greater Timonium Community Council, Inc. as adopted by the Executive Committee on the zoning matter known as:

PETITION FOR VARIANCE

E/S York Road, 82' S of Rose Street
(2323 York Road)
8th Election District – 3rd Council District
Frieda G. Schaefer, Legal Owner; Bad Dog Corp., t/a An Pointin Stil
Case No. 02-165-A

is that: Greater Timonium Community Council, Inc. opposes the granting of the various variances requested. The Petitioner created his own hardship. The property is not unique as the stream and environmental buffer have existed since 1988. The petitioner leased the property in 1999. Further information will be presented at the Baltimore County Board of Appeals hearing.

AS WITNESS OUR HANDS AND SEAL THIS 8TH DAY OF JANUARY 2003.

ATTEST: **Greater Timonium Community Council, Inc.**

Secretary Josephine J Owen **President**

File: GTCC Opposed 2323 Yrk Rd.

Legal Owner: Frieda Schaffer; Case No.: 02-165-A

Restaurant Schedule

Name	Address	Acres
1. The Stil	2323 York Road	1.78
2. Ashland Café	10810 York Road	.58
3. Bertucci's	1818 York Road	1.99
4. Corner Stable	9942 York Road	.35
5. Michael's Café	2119 York Road	.57
6. Nautilus Diner	2047 York Road	1.5
7. Nichi Bei Kai	1524 York Road	.5
8. Ocean Pride	1534 York Road	.57
9. Pacific Rim	9726 York Road	.68
10. Romano's	9701 Beaver Dam Rd	2.44
11. Side Street Café	10921 York Road	.59
12. York Inn	10010 York Road	.69

Schedule of Land uses

File: GTCC Stil Land Uses

Guide Page	Matches	Ref & # On Page	Name & Address	Land Acres	Bldg %
4	31 of 40 of 45	A 10	Romano's 9701 Beaver Dam Rd.	2.44	6.8
1	1-10 of 45	B 9	Bertucci"s 1818 York Rd.	1.99	7.5
4	31 of 40 of 45	C 3	Nautilus 2047 York Rd.	1.50	9.8
5	41 of 45 of 45	D 3	York Inn 10010 York Rd	.69	12.4
4	31-40 of 45	E 7	Pacific Rim 9726 York Rd	.68	9.4
5	41-45 of 45	F 2	Side St. Café 10921 York Rd	.59	13.4
1	1-10 of 45	G 5	Ashland Café 10810 York Rd	.58	38.2
3	21-30 of 45	H 9	Michael/s Café ** 2119 York Rd	.57	33.9
4	31-40 of 45	I 5	Ocean Pride 1534 York Rd	.57	22.3
4	31-40 of 45	J 4	Nichi Bei Kai 1524 York Rd	.50	22.1
2 22.6	11-20 of 45	K 5	. Corner Stable 9942 York Rd	.35	

Schedule of Land uses

File: GTCC Stil Land Uses

Guide Page	Matches	Ref & # On Page	Name & Address	Land Acres	Bldg %
4	31 of 40 of 45	A 10	Romano"s 9701 Beaver Dam Rd.	2.44	6.8
1	1-10 of 45	B 9	Bertucci"s 1818 York Rd.	1.99	7.5
4	31 of 40 of 45	C 3	Nautilus 2047 York Rd.	1.50	9.8
5	41 of 45 of 45	D 3	York Inn 10010 York Rd	.69	12.4
4	31-40 of 45	E 7	Pacific Rim 9726 York Rd	.68	9.4
5	41-45 of 45	F 2	Side St. Café 10921 York Rd	.59	13.4
1	1-10 of 45	G 5	Ashland Café 10810 York Rd	.58	38.2
3	21-30 of 45	H 9	Michael/s Café ** 2119 York Rd	.57	33.9
4	31-40 of 45	I 5	Ocean Pride 1534 York Rd	.57	22.3
4	31-40 of 45	J 4	Nichi Bei Kai 1524 York Rd	.50	22.1
2 22.6	11-20 of 45	K 5	. Corner Stable 9942 York Rd	.35	

Schedule of Land uses

File: GTCC Stil Land Uses

Guide Page	Matches	Ref & # On Page	Name & Address	Land Acres	Bldg %
4	31 of 40 of 45	A 10	Romano's 9701 Beaver Dam Rd.	2.44	6.8
1	1-10 of 45	B 9	Bertucci"s 1818 York Rd.	1.99	7.5
4	31 of 40 of 45	C 3	Nautilus 2047 York Rd.	1.50	9.8
5	41 of 45 of 45	D 3	York Inn 10010 York Rd	.69	12.4
4	31-40 of 45	E 7	Pacific Rim 9726 York Rd	.68	9.4
5	41-45 of 45	F 2	Side St. Café 10921 York Rd	.59	13.4
1	1-10 of 45	G 5	Ashland Café 10810 York Rd	.58	38.2
3	21-30 of 45	H 9	Michael/s Café ** 2119 York Rd	.57	33.9
4	31-40 of 45	I 5	Ocean Pride 1534 York Rd	.57	22.3
4	31-40 of 45	J 4	Nichi Bei Kai 1524 York Rd	.50	22.1
2 22.6	11-20 of 45	K 5	. Corner Stable 9942 York Rd	.35	

Schedule of Land uses

File: GTCC Stil Land Uses

Guide Page	Matches	Ref & # On Page	Name & Address	Land Acres	Bldg %
4	31 of 40 of 45	A 10	Romano's 9701 Beaver Dam Rd.	2.44	6.8
1	1-10 of 45	B 9	Bertucci"s 1818 York Rd.	1.99	7.5
4	31 of 40 of 45	C 3	Nautilus 2047 York Rd.	1.50	9.8
5	41 of 45 of 45	D 3	York Inn 10010 York Rd	.69	12.4
4	31-40 of 45	E 7	Pacific Rim 9726 York Rd	.68	9.4
5	41-45 of 45	F 2	Side St. Café 10921 York Rd	.59	13.4
1	1-10 of 45	G 5	Ashland Café 10810 York Rd	.58	38.2
3	21-30 of 45	H 9	Michael/s Café ** 2119 York Rd	.57	33.9
4	31-40 of 45	I 5	Ocean Pride 1534 York Rd	.57	22.3
4	31-40 of 45	J 4	Nichi Bei Kai 1524 York Rd	.50	22.1
2 22.6	11-20 of 45	K 5	. Corner Stable 9942 York Rd	.35	

Schedule of Land uses

File: GTCC Stil Land Uses

Guide Page	Matches	Ref & # On Page	Name & Address	Land Acres	Bldg %
4	31 of 40 of 45	A 10	Romano's 9701 Beaver Dam Rd.	2.44	6.8
1	1-10 of 45	B 9	Bertucci"s 1818 York Rd.	1.99	7.5
4	31 of 40 of 45	C 3	Nautilus 2047 York Rd.	1.50	9.8
5	41 of 45 of 45	D 3	York Inn 10010 York Rd	.69	12.4
4	31-40 of 45	E 7	Pacific Rim 9726 York Rd	.68	9.4
5	41-45 of 45	F 2	Side St. Café 10921 York Rd	.59	13.4
1	1-10 of 45	G 5	Ashland Café 10810 York Rd	.58	38.2
3	21-30 of 45	H 9	Michael/s Café ** 2119 York Rd	.57	33.9
4	31-40 of 45	I 5	Ocean Pride 1534 York Rd	.57	22.3
4	31-40 of 45	J 4	Nichi Bei Kai 1524 York Rd	.50	22.1
2 22.6	11-20 of 45	K 5	. Corner Stable 9942 York Rd	.35	

Schedule of Land uses File: GTCC Stil Land Uses 2

PC 12

Guide Page	Matches	Ref	No. on Page	Name & Address	Land Acres	Bldg %
1	1-10 of 45	L-1	3	An Potin Stil 2323 York Rd	1.78*	7.2

Please Note the following:
When this property was converted from a house/office in 1988 to build a Marriott Corp. Bob's Big Boy – Timonium facility (See Map Exhibit #2), The land area shown was 1.06 acres. The balance of the 1.78 acres was reserved as a forest buffer and stream protection. This resulted in that area being .76 acres reserved.

Also the 100 year flood plain line was shown dissecting from east to west on the northern area of the property inside the proposed property area.

Thus the Land Acres available for commercial use is 1.06 16.0
(Current Bld Sq. Feet 7394 Divided by 46173 Sq. Feet = 16.0%)

The Department of Environment letter dated November 6, 2001 (Exhibit_____) addressed to Vernon Boozer, Esquire, Councel for An Poitin Stil, indicated in the first paragraph <u>the stream and non-disturbance area was established on this site at the time of the initial restaurant construction in accordance with the Baltimore County Water Quality Management Policy, the 100-year floodplain was changed, Since the establishment of the 50-foot stream buffer, the parking lot was rounded off resulting in approzimately 900 square feet of buffer disturbance.</u>

The lease for this property by Dr. John Mitcherling, representing Bad Dog Corp., t/a An Pointin Stil was signed in early 1999. The restrictions on available use were known at that time.

Additions have been added since the original building was built resulting in over crowding the property and inadequate parking on premises.

#

PC 14

BAD DOG CORP. T/A AN POITIN STIL

2323 York Road, Timonium, Md. 21093

Case # 02-165-A Photos taken December 16, 2003 by Louis W. Miller

PAGE 1

No. 1 **Front view looking east from front parking lot.**

PAGE 2

No. 2 **North view of path from Evans property to parking lot area.**

No. 3 **Back East view of shed in forest reserved area. Sign to left of shed.**

No. 4 **North side addition with parking close to building.**

No. 5 **North parking lost area looking east showing striped parking.**

PAGE 3

No. 6 **Front entrance showing disabled parking area.**

No. 7 **North view of addition looking east from north parking lot.**

No. 8 **South side patio area currently being enclosed.**

No. 9 **Rear storage shed, two stories.**

PAGE 4

No. 10 **West view of Dr. Foster's, dentist, 2340 York Rd. parking area. GTCC participated in this property to allow a shared driveway with southern property owner.**

No. 11 **Southern view from Dr. Foster's shared driveway looking to the "Stil" Property south and on east side of York Rd.**

No. 12 **East view of southern adjoining property from the York Rd. storm water management pond showing iron fence over the road and the BL zoned land now used as road from improved MR zoned land.**

No. 13 **East view of southern adjoining property from front of driveway showing the former BL zoned portion now used as road to and from MR parking.**

PC 14 (13 photos)

BAD DOG CORP. T/A AN POITIN STIL

2323 York Road, Timonium, Md. 21093

1

2

3

4

5

6

7

8

9

10

11

12

13

PC 15

BALTIMORE COUNTY COMPREHENSIVE ZONING MAP

Final Log of Issues

Adopted October 10, 2000

2000 CZMP Map Issues: District 4

Councilmanic District
Secondary Roads
Major Roads
Map Issues

3
6
4
2

4-023
4-030
4-024
4-041
4-056
4-065
4-055
4-062
4-031
4-063
4-020
4-067
4-014
4-025
4-026
4-027
4-015
4-070
4-007
4-045
4-032
4-046
4-057
4-058
4-017
4-054
4-051
4-061
4-011
4-037
4-040
4-047
4-038
4-034
4-012
4-048
4-029
4-016
4-049
4-010
4-050
4-071
4-018
4-053
4-059
4-066
4-052
4-060
4-013
4-022
4-035
4-033
4-036
4-003
4-004
4-064
4-039
4-068
4-021
4-019
4-028
4-001
4-009
4-044
4-069
4-042
4-043
4-008
4-005
4-006
4-002

N
W
E
S

1 0 1 2 Miles

1:63360

Prepared by: Baltimore County Office of Planning
OIT/GIS Services Unit, January, 2000

Sources: Roads and Councilmanic Districts-Baltimore Metropolitan Council 1999 1:24000
CZMP Issues-Baltimore County Office of Planning. Digitized from 1996 Tax Maps 1:7200

Note:
This map is for display purposes only. Land use decisions involving zoning designations should be verified with the zoning office. Issues as of January 18, 2000

Councilmanic Districts

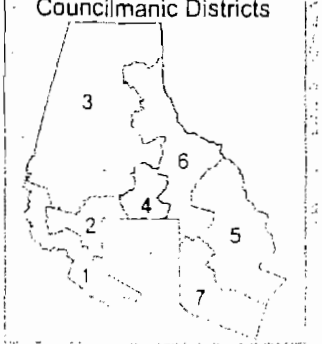

Baltimore County 2000 Comprehensive Zoning Map Issues

Issue Number	Owner, Petitioner	Location	Existing Zoning and Acres	Requested Zoning and Acres	Planning Board Recommendations	County Council Decisions	Comments
4-030	Estate of May Colgate Brewer	Timonium Heights, northeast corner of Roosevelt Ave and Broad Ave	DR 3.5 2.2 Total 2.2	BM 2.2 Total 2.2	DR 3.5 2.2 Total 2.2	DR 3.5 2.2 Total 2.2	See Issues 4-023, 4-024, 4-041, 4-056
4-031	Coldwell Banker	2317 York Rd, 840' south of York Rd & Talbott St	BL 0.3 MR 2.5 Total 2.8	BR 2.8 Total 2.8	BL 0.3 MR 2.5 Total 2.8	BL 0.3 MR 2.5 Total 2.8	
4-032	Ocean Pride	1625 Bellona Ave, 70' east of Norman Ave	DR 5.5 0.4 Total 0.4	CB BLR or 0.4 Total 0.4	DR 5.5 0.4 Total 0.4	DR 5.5 0.4 Total 0.4	
4-033	Eugene Hartman	7600 York Rd at Yorkleigh Rd	DR 3.5 0.2 Total 0.2	ROA RO or 0.2 Total 0.2	ROA 0.2 Total 0.2	ROA 0.2 Total 0.2	
4-034	John A. Hatfield Jr, et al	10501 Falls Rd, opposite Hillside Rd	DR 1 6.6 Total 6.6	BL 6.6 Total 6.6	DR 1 6.6 Total 6.6	BLR 0.2 DR 1 6.4 Total 6.6	Overlay Adopted Covenant Agreement
4-035	Sheppard and Enoch Pratt Hospital	6501 N. Charles St, 1150' south of Towsontown Blvd	DR 2 27.1 Total 27.1	OR 2 27.1 Total 27.1	OR 2 27.1 Total 27.1	DR 2 2.8 OR 2 24.3 Total 27.1	Covenant Agreement Amended by Petitioner 4/13/00 Overlay Adopted
4-036	DE-MDSynod of the Evangelical Lutheran Church	7604 York Rd	DR 3.5 0.9 Total 0.9	RO 0.9 Total 0.9	RO 0.9 Total 0.9	ROA 0.9 Total 0.9	

Verified 12/4/03 12/4/03

Verified 12/17/03

Schaefer
02-165-A

Pet Evid

1. 3pg Site Plan (A-C)
2. GIS Map/Plat
3. Letter Agreement 9/30/02
4. Penn Foster Letter
5. Zoning Reg Definitions
6. Photos/Cards

Pl

1. Colorado GIS
2. Sediment/Control Plan
3. Letters
4. Dept of Territory Data
5. Comprehensive Plan Map
6. ADC Map pg 18
7. Real Prop Tax Data for Sel
8. Officer Planning Comment 1/15/02
9. Sec 409 B2C p. 4-29
10. Rule 8
11. Department Opt
   a. Land Use
   b. Schedule of Land Uses
12. 2D MAP — Large exhibit
13. Photos A →
14. Summary Page
15. BCC Map

Baltimore County
Department of Permits and
Development Management

Development Processing
County Office Building
111 West Chesapeake Avenue
Towson, Maryland 21204
pdmlandacq@co.ba.md.us

February 15, 2002

F. Vernon Boozer
Covahey & Boozer
614 Bosley Avenue
Towson MD 21204

Dear Mr. Boozer:

RE: Case Number: 02-165-A, 2323 York Road

The above referenced petition was accepted for processing by the Bureau of Zoning Review, Department of Permits and Development Management (PDM) on October 22, 2001.

The Zoning Advisory Committee (ZAC), which consists of representatives from several approval agencies, has reviewed the plans that were submitted with your petition. All comments submitted thus far from the members of the ZAC are attached. These comments are not intended to indicate the appropriateness of the zoning action requested, but to ensure that all parties (zoning commissioner, attorney, petitioner, etc.) are made aware of plans or problems with regard to the proposed improvements that may have a bearing on this case. All comments will be placed in the permanent case file.

If you need further information or have any questions, please do not hesitate to contact the commenting agency.

Very truly yours,

W. Carl Richards, Jr.

W. Carl Richards, Jr. GDZ
Supervisor, Zoning

Review

WCR: gdz

Enclosures

c: Frieda G Schaefer, c/o MNS Dept 906, 10400 Fernwood Road, Bethesda 20817
John Mitcherling, Bad Dog Corp, 2323 York Road, Timonium 21093
D.S. Thaler & Associates Inc, P O Box 47428, Baltimore 21244
Larry Townsend, GTTC, 9B Ridgely Road, Timonium 21093
People's Counsel

Printed with Soybean Ink

BALTIMORE COUNTY, MARYLAND

INTER-OFFICE CORRESPONDENCE

TO: Arnold Jablon, Director
Department of Permits and
Development Management

DATE: January 15, 2002

FROM: Arnold F. 'Pat' Keller, III
Director, Office of Planning

SUBJECT: 2323 York Road

INFORMATION:

JAN 16 2002

Item Number: 165

Petitioner: Bad Dog Corporation, T/A An Pointin Still

Zoning: BL

Requested Action: Variances

SUMMARY OF RECOMMENDATIONS:

The Office of Planning is concerned about the number of variances being requested in the subject matter. The applicant requests variance relief from the number of spaces to be provided, width of parking spaces, reduction in required distance to the right-of-way, and from requirements of the Baltimore County Landscape Manual. The County and State have invested considerably in the upgrading and improvement of York Road and in no instance should landscaping and planting areas be reduced along the corridor. In fact, if at all possible these areas should be increased. The impact of the combined requested relief could result in a negative impact to adjacent properties.

In some instances it would appear that the relief requested ignores current trends. For example, requested relief from parking space width appears to be at odds with continuing consumer preference for larger motor vehicles.

Whenever a number of variances are necessary to accommodate a use, it suggests that the site is being overdeveloped. Planning staff is very familiar with the subject property, and it is clear that "The Still" is a popular establishment where on-site parking is often scarce.

Information should be provided to the Zoning Commissioner at the time of hearing regarding all existing and proposed parking agreements. While the Office of Planning does not want to discourage successful existing businesses from expanding, it is important that the applicant demonstrate that the development can be accommodated on the site and that parking needs can be met.

With regard to the sign variances, the success of the current operation appears to suggest that additional signage is unnecessary.

Section Chief: Jeffrey W. Long

AFK:JL

BALTIMORE COUNTY, MARYLAND

INTER-OFFICE CORRESPONDENCE

TO: Arnold Jablon, Director
Department of Permits and
Development Management

DATE: December 27, 2001

FROM: Arnold F. 'Pat' Keller, III
Director, Office of Planning

SUBJECT: Zoning Advisory Petition(s): **Case(s) 02-165 & 02-204**

The Office of Planning has reviewed the above referenced case(s) and has no comments to offer. For further questions or additional information concerning the matters stated herein, please contact Mark A. Cunningham in the Office of Planning at 410-887-3480.

Prepared by: Mark A Cunningham

27

Section Chief: Jeffrey W. Long

AFK/JL:MAC

\\NCH_NW\VOL3\WORKGRPS\DEVREV\ZAC\nocomment.doc

Baltimore County
Fire Department

700 East Joppa Road
Towson, Maryland 21286-5500
410-887-4500

December 10, 2001

Department of Permits and
Development Management (PDM)
County Office Building, Room 111
Mail Stop #1105
111 West Chesapeake Avenue
Towson, Maryland 21204

ATTENTION: Gwen Stephens

RE: Property Owner: SEE BELOW

Location: DISTRIBUTION MEETING OF November 26, 2001

Item No.: See Below

Dear Ms. Stephens:

Pursuant to your request, the referenced property has been surveyed by this Bureau and the comments below are applicable and required to be corrected or incorporated into the final plans for the property.

8. The Fire Marshal's Office has no comments at this time, IN REFERENCE TO THE FOLLOWING ITEM NUMBERS:

151, 152, 155, 156, 157, 159, 161, 164, 165, 166, 167, 168, 169, 170, 171, 172, 173, 174, and 175

REVIEWER: LIEUTENANT JIM MEZICK, Fire Marshal's Office
PHONE 887-4881, MS-1102F

cc: File

Printed with Soybean Ink
on Recycled Paper

BALTIMORE COUNTY, MARYLAND

INTEROFFICE CORRESPONDENCE

TO: Arnold Jablon, Director
Department of Permits & Development Mgmt.

DATE: December 20, 2001

FROM: Robert W. Bowling, Supervisor
Bureau of Development Plans Review

SUBJECT: Zoning Advisory Committee Meeting
For December 3, 2001
Item Nos.* 151, 152, 155, 157, 161, 164, 165, 167, 168, 170, 171, 172, 173, 174, and 175

The Bureau of Development Plans Review has reviewed the subject zoning items, and we have no comments.

*Items number 153 and 154 were not designated.

RWB:HJO:jrb

cc: File

Maryland Department of Transportation
State Highway Administration

Parris N. Glendening
Governor

John D. Porcari
Secretary

Parker F. Williams
Administrator

Date: 12·3·01

Mr. George Zahner
Baltimore County Office of
Permits and Development Management
County Office Building, Room 109
Towson, Maryland 21204

RE: Baltimore County
Item No. ~~165~~ JMP

Dear Mr. Zahner:

We have reviewed the referenced item and have no objection to approval, as a field inspection reveals that the existing entrance(s) on to MD/~~US~~ 45.
are acceptable to the State Highway Administration (SHA) and this development is not affected by any SHA projects.

Should you have any questions regarding this matter, please contact Larry Gredlein at 410-545-5606 or by E-mail at (lgredlein@sha.state.md.us).

Very truly yours,

L. J. Gredlein

for Kenneth A. McDonald Jr., Chief
Engineering Access Permits Division

My telephone number is _____

Maryland Relay Service for Impaired Hearing or Speech
1-800-735-2258 Statewide Toll Free

Mailing Address: P.O. Box 717 • Baltimore, MD 21203-0717
Street Address: 707 North Calvert Street • Baltimore, Maryland 21202

BALTIMORE COUNTY, MARYLAND
DEPARTMENT OF ENVIRONMENTAL PROTECTION & RESOURCE MANAGEMENT

TO: Arnold Jablon

FROM: Todd G. Taylor TGT

DATE: 12/03/01

SUBJECT: Zoning Item 165
Address 2323 York Road

Zoning Advisory Committee Meeting of 11/26/01

_____ The Department of Environmental Protection and Resource Management has no comments on the above-referenced zoning item.

_____ The Department of Environmental Protection and Resource Management requests an extension for the review of the above-referenced zoning item to determine the extent to which environmental regulations apply to the site.

_____ The Department of Environmental Protection and Resource Management offers the following comments on the above-referenced zoning item:

_____ Development of the property must comply with the Regulations for the Protection of Water Quality, Streams, Wetlands and Floodplains (Sections 14-331 through 14-350 of the Baltimore County Code).

_____ Development of this property must comply with the Forest Conservation Regulations (Section 14-401 through 14-422 of the Baltimore County Code).

_____ Development of this property must comply with the Chesapeake Bay Critical Area Regulations (Sections 26-436 through 26-461, and other Sections, of the Baltimore County Code).

Additional Comments:

The areas outside the existing parking lot are non-disturbance areas for the protection of the stream and 100 year flood plain.

Reviewer: Paul Dennis Date: 12/3/01

VARIANCE APPLICATION
Regulation[redacted]or the Protection of Wate[redacted]uality
Streams, Wetlands and Floodplains

Part A. Applicant Information.

Applicant(s):

Name(s): John Mitcherling **Phone No.** (410)560-2960

Company: An Poitin Stil

Street Address: 2323 York Road

City: Timonium **State:** MD **Zip Code:** 21093

Property Owner/Developer(s):

Name(s): Frieda Schaefer **Phone No.**

Company: c/o HMS Department # 906

Street Address: 10400 Fernwood Road.

City: Bethesda **State:** MD **Zip Code:** 20817-1109

Contract Purchaser(s):

Name(s): **Phone No.** (410)

Company: N/A

Street Address:

City: **State:** **Zip Code:**

Engineer:

Name: Alan E. Scoll, R.L.A. **Phone No.** (410) 944-3647

Company: D. S. Thaler & Associates, Inc.

Street Address: 7115 Ambassador Road, P.O. Box 47428

City: Baltimore **State:** MD **Zip Code:** 21244-7428

Principal Contact:

Name: Alan E. Scoll, R.L.A. **Phone No.** (410) 944-3647

Company: D. S. Thaler & Associates, Inc.
Street Address: 7115 Ambassador Road, P.O. Box 47428

City: Baltimore **State:** MD **Zip Code:** 21244-7428

Part B. Property Information.

Property Address/Location: 2323 York Road
Lutherville, MD 21093

Tax Account Number(s): 0819009700

Subdivision: Timonium

Tax Map: 51 **Parcel No(s):** 117 **Lot No.** N/A

Acreage/Lot Size: 1.82 Ac± **Zoning:** BL

Water: Public **Sewer:** Public

Part C. Variance Type.

Indicate the specific section(s) of the Code from which you are requesting a variance:

Section 14-341, "Design Standards for Forest Buffers and Building Setbacks."

Indicate the reason why you are applying for a variance. Please check only one item.

__X__ practical difficulty or hardship

_____ public improvement project

_____ repair/maintenance of public improvement

_____ had stream/forest buffer applied in conformance with Water Quality Management Policy or Executive Order

Part D. Indication of Practical Difficulty or Unreasonable Hardship.

The subject site is presently fully developed with a restaurant and associated parking. The current owners leased the site fully developed (previously, the building was occupied by a "Bob's Big Boy" Restaurant). Since taking over, they have made some minor improvements. The current proposal entails enclosing slightly less than 600 square feet of area on the north side of the building, generally corresponding to an area already under roof.

Strict compliance with the Forest Buffer regulations would not only require removal of most of the site's parking, but most if not all of the building itself. Without relief from the regulations, the referenced business will not be able to continue operations in this location.

Part E. Project Description.

Briefly describe the proposed project or activity.

The applicant proposes to build a 594 square foot addition on the north side of his building. The disturbance contemplated lies behind an existing low retaining wall, and is separated from the adjacent stream by two (2) bays of parking, a driveway, and 35 to 50 feet of lawn and woods.

Part F. Existing Resources.

Briefly describe the existing resources (e.g., streams, wetlands, floodplains, steep slopes/erodible soils, vegetation) present within the Forest Buffer, and the condition/quality of these resources.

The subject property is located on the east side of York Road just north of the Maryland State Fairgrounds. The 1.8 acre site is nearly level, and is improved with a building and parking lot. A 1st order unnamed tributary to a "Use III" stream system runs through the back corner of the site, approximately 35 to 50 feet off the edge of the existing parking. The channel itself is wooded until it gets to the funeral home next door where lawn is maintained to the channel edges.

A wetland survey of the immediate upstream area found no associated wetlands outside the stream channel.

Part G. Proposed Forest Buffer Impacts.

Briefly describe the proposed Forest Buffer impacts (e.g., type/acreages of wetlands to be filled, forest to be cleared, width of buffer to be impacted, etc.). Include a description of the Forest Buffer that would remain, if these impacts are allowed to occur.

No additional impacts are proposed. The existing unpaved portions of the site adjacent to the stream will remain as buffer.

Part H. Minimization of Impacts.

Briefly describe how the proposed project or activity will minimize impacts to water quality, streams, wetlands and floodplains, both during construction and over the long term. Include a description of any proposed mitigative measures.

The applicant proposes to create and record a Forest Buffer easement (approximately 0.68 Acres±) over the aforementioned area between the parking lot and the stream and the stream and the rear property lines. This easement will guarantee the protection of these areas from clearing, grading, construction or other activity in perpetuity. This easement will be submitted to DEPRM within 60 days of the approval of this variance request and release of the building permit for the referenced building addition.

Part I. Supplemental Information.

Indicate any supplemental information included with the application.

_____ functional assessment of:

_____ alternatives analysis for proposed impacts to:

_____ a conceptual mitigation plan for proposed impacts to:

_____ wetland data sheets

_____ copies of pertinent State and Federal permits

__X__ other (explain)

Exhibit A: Site Plan

I/We do solemnly declare and affirm under the penalties of perjury that the contents of this application are true and correct to the best of my/our knowledge, and that the application contains names and addresses of all persons having legal or equitable interest in the property.

8/15/01

Applicant Signature Date

(ARNOLD E. SCOLL, AS AGENT)

H:\CORRESPONDENCE\PROJECTS\YORK ROAD 2323\VARIANCE YORK ROAD 2323.DOC

D.S. THALER & ASSOCIATES, INC.

7115 AMBASSADOR ROAD • P.O. BOX 47428 • BALTIMORE, MARYLAND 21244-7428
(410) 944-ENGR • (410) 944-3647 • FAX (410) 944-3684

August 21, 2001

F. Vernon Boozer, Esquire
Covahey & Boozer, PA
614 Bosley Avenue
Towson, MD 21204

Re: 2323 York Road
Variance Application

Dear Mr. Boozer

You recently requested our thoughts with regard to your case for the variances that we will be requesting for the referenced site. In response to that request, please note the following:

1. The site is currently developed to its maximum potential with regard to boundaries and environmental constraints.

2. This site is an odd shape, with roughly about 1/3 of the site environmentally constrained by a stream running through it.

3. The stream limits access to other properties near by, with the exception of the parcel adjacent on the south. The applicant has been successful in negotiating a lease for overflow spaces from the owners of that property. However, at this point in time the property is being actively marketed for sale and the future use of those spaces is not guaranteed.

4. The parking configuration was established years ago when the property was a " Bob's Big Boy" restaurant.

5. The applicant apparently leased the property without additional

survey, probably because the modifications he has been making to site were almost entirely limited to the building itself, which lies in the middle of the parking area.

6. The restaurant owners will not be able to operate their restaurant on this site if the relief is not granted.

I hope this information satisfies your concerns at this time. Should you have any questions please do not hesitate to contact our office.

Very truly yours,

D.S. THALER & ASSOCIATES, INC.

Alan E. Scoll, R.L.A.
Chief, Dept. of Landscape Architecture

Copy: John Mitcherling, MD
David S. Thaler, P.E., L.S.

Greater Timonium Community Council, Inc.
C/O Louis W. Miller, 44 E. Timonium Rd., Timonium, Md. 21093
Phone: 410-252-3444 Email: Leabo@aol.com

REF: Bad Dog Corp. T/A An Poitin Stil Case # 02-165- 2323 York Rd: E/S York Rd. 82' S Rose St, 15th Election District, 3rd Councilmanic.
Before the County Board of Appeals for Baltimore County.

Frieda G. Schaefer, Legal Owners
Bad Dog, Corp., T/A An Poitin Stil, Contract Purchaser

Greater Timonium Community Council, Inc. represented by Louis W. Miller, Past President and Treasurer, Citizens argument outline.

1. **Whether the forest/stream buffer was registered with Baltimore County in 1988 or 2001 does not excuse the current leaseholder from knowing the limitations in use of the property. Bad Dog Corp. signed the lease in 1999 and at that time no parking variances were needed.**

2. **The excavation and parking map of Bob's Big Boy in 1988 showed the number of parking spaces as 101, well within the County requirement for the building square footage. That site plan was also signed by The Department of Environmental Protection and Resource Development in 1988. (Please refer to Letter Exhibit 3 dated November 6, 2001 from Patricia M. Farr, Program Supervisor, Environmental Impact Review.**

3. **The Club House Diner leased the area in 1997-98 and needed no parking variances.**

4. **Only by expanding the square footage of the building, patio, and two story shed did parking variances become required, which now totals 119 spaces.**

5. **Following is a table of these square foot additions and the parking spaces for each requirement:**

	Sq. ft.	X 16	Regressive total
Basic building			
Per Current Site Plan	7394	119	119
Less North addition	-594	10	- 109
Less Shed 2 Story	-510	9	- 100
Less Patio 30X40/.50	-600	10	- 90
Net orginal building	5620	90	90

6. **Given that 900 square feet of the stream buffer was imposed upon, would equal 15 parking spaces, the net available parking would be 75. Granted the stream buffer was not formalized until November 13, 2001, the lease was signed in early 1999. Since two former restaurants occupied the premises it is obvious that the stream buffer existed since 1988.**

Greater Timonium Community Council, Inc.
C/O Louis W. Miller, 44 E. Timonium Rd., Timonium, Md. 21093
Phone: 410-252-3444 Email: Leabo@aol.com

7. Mr. Scoll, testified that the formal covenant was signed just recently and he worked on the verbage does not agree with the recorded dating of November 13, 2001. Nor, does it agree with Poitin Stil DRC Number 081691 dated 8/16/99, and heard by the DRC committee 8/23/99. This request showed the acreage as *1.06. At that early date they knew the size of the available land.* GTCC appeared at this hearing and questioned the parking arrangements for this expansion. Mr. Boozer stated they would lease the BL land south of the Stil, occupied by Mr. Fields. By my observation that could not be done as Fields had all spaces occupied with cars for repair.

8. Consider that the leasee removed curbing when constructing the north side 594 Ft. addition and presented a site plan showing the prior existing curbing and small parking spaces 6" from the building, what were they trying to hide? There are now eight (8) spaces where there were only six (6) shown on that site plan, of which two (2) would be less size than County records allow.
(See Photo Exhibit 14 B. 4 and 14 C. 7)

9. Mr. Dorsey Baldwin, partner, testified as to verbal and written agreements relating to off premises parking agreements. As to the Evans Funeral Parlor property on the north adjacent property, their square footage requires seventy nine parking spaces. They have only seventy seven, thus cannot offer any to the Stil.

As to Dr. Foster's, dentist, GTCC worked on his parking zoning request and shared driveway with his southern neighbor. We agreed with the parking plan. His area does not have any allowable spaces to be used by the Stil. (See Photo Exhibit 14 D. 10 and 14 D. 11) In addition, the property is across York Road and is more than 500 feet from the Stil doorway. It is not across the street or alley as the regulations require.

As to the south property, currently owned by UPS Logistics of Memphis, Tenn., UPS Corporate headquarters refused to grant any parking for Stil personnel or customers. GTCC worked with Mr. Baldwin, Tom Obrecht, and manager of the building. No agreement was reached after a year of discussions.

MIMIBA LLC (William W. Mitcherling) purchased a DR3.5 property across York Road at 3 Thelma Street November 27, 2001. Demolished the house and applied for commercial parking in residential zone. (Case #02-533-SPHA). GTCC appeared at the Deputy Zoning Commission's hearing and presented twelve Exhibits. The petition was denied. The petitioner filed an appeal with the Board of Appeals. May 27, 2004, 10:00am date and time is set for this case to be heard.

Given the efforts above, the "Stil" is still trying to relieve themselves of the Baltimore County zoning regulations by trying to find off-premises parking. They refuse to recognize they are *landlocked and created their own hardship by further expanding the facilities.*

Greater Timonium Community Council, Inc.
C/O Louis W. Miller, 44 E. Timonium Rd., Timonium, Md. 21093
Phone: 410-252-3444 Email: Leabo@aol.com

Since early 1999 this commercial business has attempted to overload the land, expand the building and its services, regardless of the Baltimore County zoning regulations. A fine was reduced to $500 by JMA 12/8/00. (See Exhibit 4B)

10. SUMMARY

A. This successful business has exceeded the Baltimore County zoning and parking regulations. They have attempted to continue to ignore these regulations.

B. GTCC attempted to aid them to secure adequate off-premises parking. None were successful.

C. They have reduced the parking and landscape regulations, sizes and quantity of parking facilities, and aisle movement spaces.

D. Other successful restaurants in the area, as exhibited by GTCC. operate successfully in less ground area without variances.

E. The property is not unique and thus the variances granted by the Zoning Commissioner must be denied.

F. Restrictions on any further expansion of this business must be exercised by order of this Board of Appeals.

G. GTCC, Inc. requests this Baltimore County Board of Appeals deny the granting of the variances as requested.

Louis W. Miller, Treasurer
President Elect - 2004
44 E. Timonium Rd.
Timonium, Md. 21093
Phone: 410-252-3444
Email: Leabo@aol.com

File: GTCC Stil Oral Plan.doc

PLEASE PRINT CLEARLY

PETITIONER(S) SIGN-IN SHEET

NAME	ADDRESS
Dr. John Mitchelling	2323 York Rd Timonium Md 21093
Dr. John Mitchelling	2323 York Rd Timonium Md 21093
Alan Scoll	D.S. Thaler & Assoc., Inc
	7115 Ambassador Rd.
	Balto. 21244
M. Sorzer	614 Bosley Ave 21204

Printed with Soybean Ink on Recycled Paper

Case Number 02-165A

PLEASE *PRINT* LEGIBLY

PROTESTANT'S SIGN-IN SHEET

Name	Address	City, State	Zip Code
LARRY TOWNSEND	GTCC 1111 LONGBRANCH ROAD	LUTHERVILLE MD	21093
LOUIS W. MILLER	GTCC, INC - PAST PRES. 44 E. TIMONIUM RD 21093	TIM. MD	21093

Revised 4/17/00

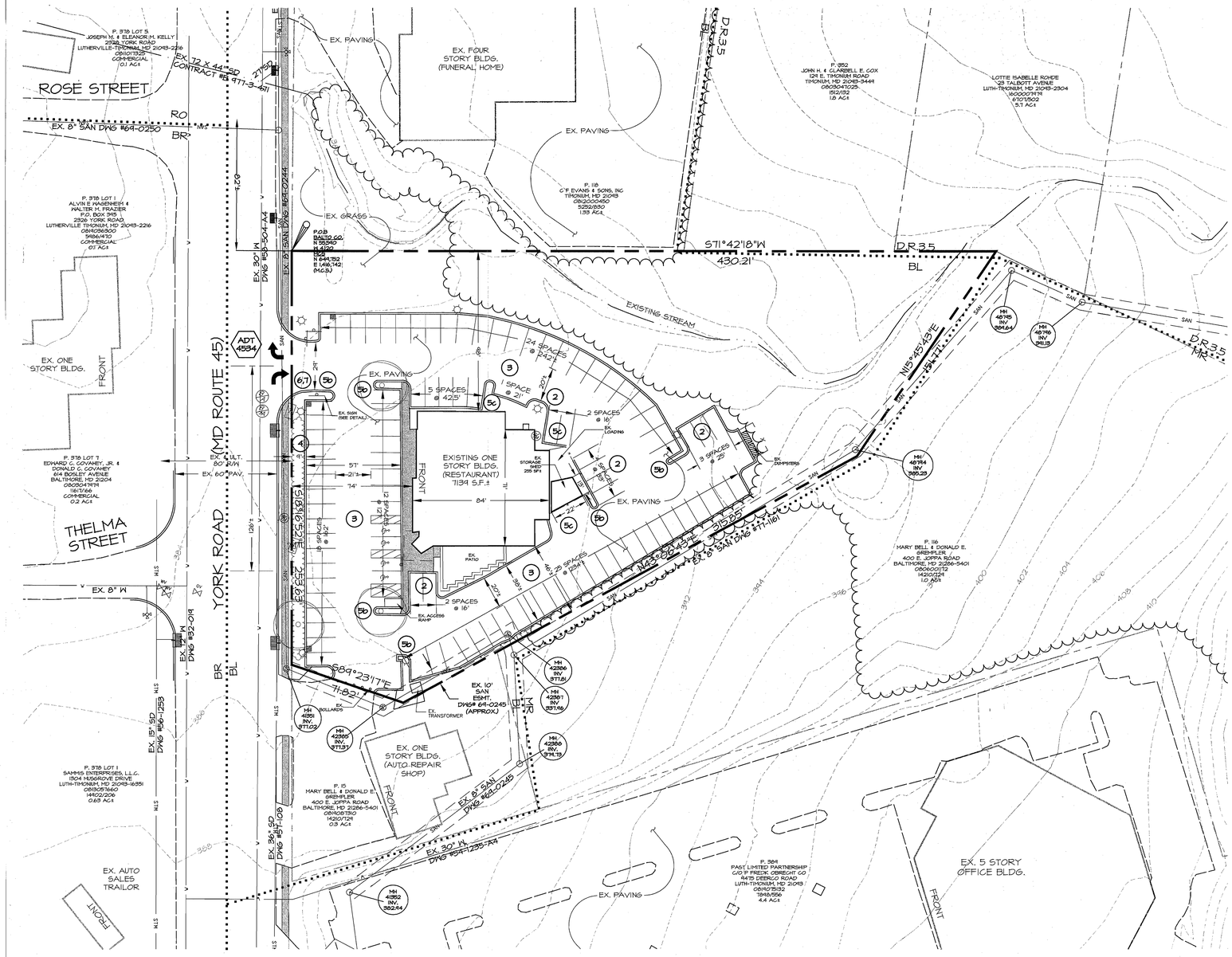

GENERAL NOTES:

1. DEVELOPMENT
   NAME: 2323 York Road
2. APPLICANT: An Poitin Stil
   1900 E. Northern Parkway
   Baltimore, MD 21239
   410.323.9400
   ATTN: John J. Mitchelling
3. OWNER: Albert P. & Frelda G. Schaefer
   c/o HMS Dept. #406
   10400 Fernwood Road
   Bethesda, Md 20817-1109
4. PLAN PREPARED BY: D.S. Thaler & Associates, Inc.
   7115 Ambassador Road
   P.O. Box 47428
   Baltimore, Maryland 21244-7428
   (410) 944-3647
   ATTN: Alan E. Scoll, R.L.A.
5. PROPERTY REFERENCES:

Parcel	Tax Map	Grid	Tax Account No.	Deed	ADC-Map
117	51	23	0814004700	3546/154	18-K10

   Boundary: D.S. Thaler & Associates, Inc. (April 2001)
   Topography: Baltimore County 615 (51-C3)
   Utilities: Baltimore County Key Map (5-SE)
   Baltimore County Design Drawings as noted
   Zoning: Baltimore County 200 Scale Zoning Map (2000) (NW-14A)
   Floodplain: Per the Flood Insurance Rate Map Panel#240010-0235-B March 2, 1981: There is no Floodplain on site
6. GENERAL DATA:
   Election District: 8 Watershed: 11
   Census Tract: 4085.05 Subwatershed: 23
   Councilmanic District: 3
7. SITE INFORMATION:
   A. Acreage: 1.82 Acres± (net)
   1.99 Acres± (gross: 30' R/W @ 253.83'= 0.17 AC±)
   B. Existing Zoning: BL
   C. Density Calculations:
   FAR Allowed: 3.0 or 260,053 SF
   FAR Existing: 0.08 or 7,394 SF (including existing storage shed) (per permit site plan dated 5/16/01)
   D. Parking:
   Required: 16 spaces/1000 SF
   16/1000 x 7,394± = 119 spaces
   Existing: 97 spaces
8. UTILITIES: Public water and sewer are provided.
9. USE: The existing use is restaurant.
10. EXISTING: There are no known critical areas, archaeological sites, endangered species, or hazardous materials* on the site. There are no zoning case numbers on file. This site does not lie within the limits of the Chesapeake Bay Critical Area.

    *As known to the applicant; location and description of hazardous materials as defined by section 7-101 of the environmental article of the annotated code of Maryland, as from time to time amended.
11. ROADS: All interior roads are private
12. AVERAGE DAILY TRIPS (ADTS):
    Average daily trips as calculated from the Baltimore County Comprehensive Manual of Development Policy (CMDP)
    Average Daily Trips: 16.8 ADT/1000SF = 4534 ADTS
13. STORAGE TANKS: There are no known underground storage tanks on site.
14. LIGHTING: Existing lighting is indicated on plan.
15. This property as shown on the plan has been held intact since 1958 (according to the deed). No known part of the gross area of this property as shown on the plan has been utilized, recorded or represented as density or area to support any off-site dwellings.
16. Existing sidewalks are provided along York Road.
17. All parking aisles and maneuvering areas are paved with macadam and permanently striped.
18. According to Glen Hoge, Office of Planning, MTA, the nearest MTA service to this site is 0.3 miles away (bus stop #9 at York Road and Padonia Road).
19. There are no known Areas of Critical State Concern on-site.
20. There are no known limitations established by the Courts, County Board of Appeals, Planning Board or Zoning Commissioner or restrictive covenants recorded with individual or group which would limit proposed development on site.
21. There is no building, property or site within or contiguous to the proposed development included on the Maryland Historical Trust Inventory of Historic Properties, the Baltimore County Preliminary or Final Landmarks List, the National Register of Historic Places, the Maryland Archaeological Survey, or Identification of any Baltimore County Historic District, or National Register District covering the proposed development.
22. No additional information is requested by the Department of Environmental Protection and Resource Management to determine compliance with the Critical Area Local Protection Program pursuant to 26-442(a).
23. Site History:
    Building Permits: B436354 (12.7.00). 2 story storage building
    B372570 (4.15.94). interior alterations
    B384654 (8.23.94). patio
    B341155 (9.14.94). pergola
    DRC #061101D, DIST. 8C3: Development Review Committee granted an A-7 limited exemption per Section 26.1.1(A)(7) of the Baltimore County Code on June 21, 2001 for a building addition.

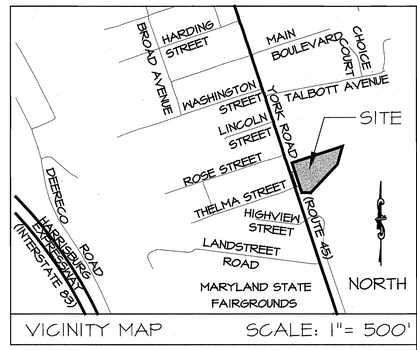

VICINITY MAP SCALE: 1"= 500'

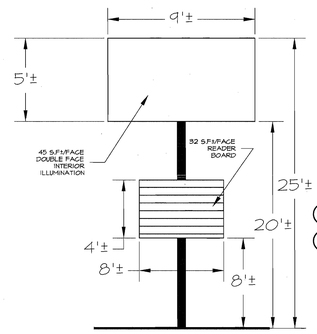

EXISTING FREE STANDING ENTERPRISE SIGN ELEVATION
N.T.S.

PLAT TO ACCOMPANY ZONING PETITION

2323 YORK ROAD

0 15 30 60 90
SCALE: 1"=30'
NORTH

VARIANCE REQUESTS

VARIANCES ARE REFERENCED IN THE PLAN AND DETAILS BY NUMBER AND LETTER OF THE REQUEST IN THE FOLLOWING MANNER: (5a)

1. From Section 409.6.2. of the Baltimore County Zoning Regulations (BCZR) -

   To allow the existing 97 parking spaces in lieu of 119 spaces required.
2. From Section 409.3 (BCZR) -

   To allow standard angled parking spaces eight feet (8') wide in lieu of 8.5 feet required.
3. From Section 409.4.C. (BCZR) -

   To allow parking aisle widths of 20 feet in lieu of 22 feet required.
4. From Section 409.8.A.4. (BCZR) -

   To allow a nine foot (9') setback from parking to a street right-of-way in lieu of 10 feet required.
5. From Section 409.8.A.1. (BCZR) and the Baltimore County Landscape Manual as follows:

   a. Part III. B.2.a.

      To allow three (3) percent of the parking lot to be internal islands in lieu of seven percent (7%) required.

   b. Part III. B.2.c.

      To allow parking islands 2.5 feet wide in lieu of nine feet (9') required.

   c. Part III. B.2.d.

      To allow six inch (6") setback parking-to-building in lieu of six feet (6') required.
6. From Section 450.7.B.1. BCZR -

   To allow a free-standing enterprise sign with a non-contiguous reader-board.
7. From Section 450.7.B.2. BCZR -

   To allow a reader-board of 71.1% (32 SF per face) in lieu of the required 50% (22.5 SF per face) of an erected permitted enterprise sign.
8. And any other variances deemed necessary by the Zoning Commissioner.

LEGEND

EXISTING

TRACT BOUNDARY	ROAD/DRIVE
OTHER PROPERTY LINE	
PL	
D.R. 3.5 ZONING BOUNDARY	CURB
EASEMENT	SAN — SANITARY SEWER
CONTOUR	STM — STORM DRAIN
	W — WATER LINE
TREE LINE	LIGHT POLE
	UTILITY POLE

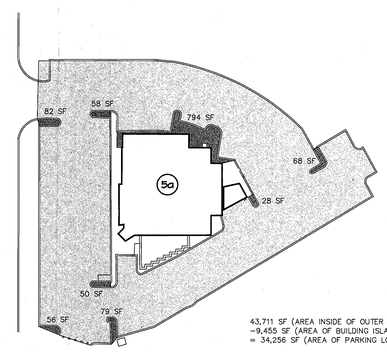

ISLAND AREAS
82 SF
58 SF
794 SF
68 SF
28 SF
79 SF
50 SF
56 SF
1,215 SF TOTAL

43,711 SF (AREA INSIDE OF OUTER PARKING LOT CURB)
-9,455 SF (AREA OF BUILDING ISLAND)
= 34,256 SF (AREA OF PARKING LOT)

1,215 SF (TOTAL ISLAND AREAS) / 34,257 SF (AREA PARKING LOT) = .035
3.5% OF PARKING LOT SPACE IN ISLANDS

PARKING ISLAND STUDY
1" = 50'

PROJECT NAME: 2323 YORK ROAD

PLAN TITLE: PLAT TO ACCOMPANY ZONING PETITION

COUNCILMANIC DIST.: 3

ELECTION DIST.: 8

APPROVAL:

REVISIONS:

D. S. THALER & ASSOC., INC.
CIVIL ENGINEERS SURVEYORS
LANDSCAPE ARCHITECTS LAND PLANNERS
7115 AMBASSADOR ROAD
P.O. BOX 47428
BALTIMORE, MARYLAND 21244-7428
(410) 944-ENGR, (410) 944-3647

STATE OF MARYLAND ALAN E. McCOLL REGISTERED LANDSCAPE ARCHITECT NO. 787

DATE: 11-21-01
SCALE: 1"= 30'
C.I.: 2'
PROJ. NO.: 02369A
SHEET 1 OF 1

02-165-A

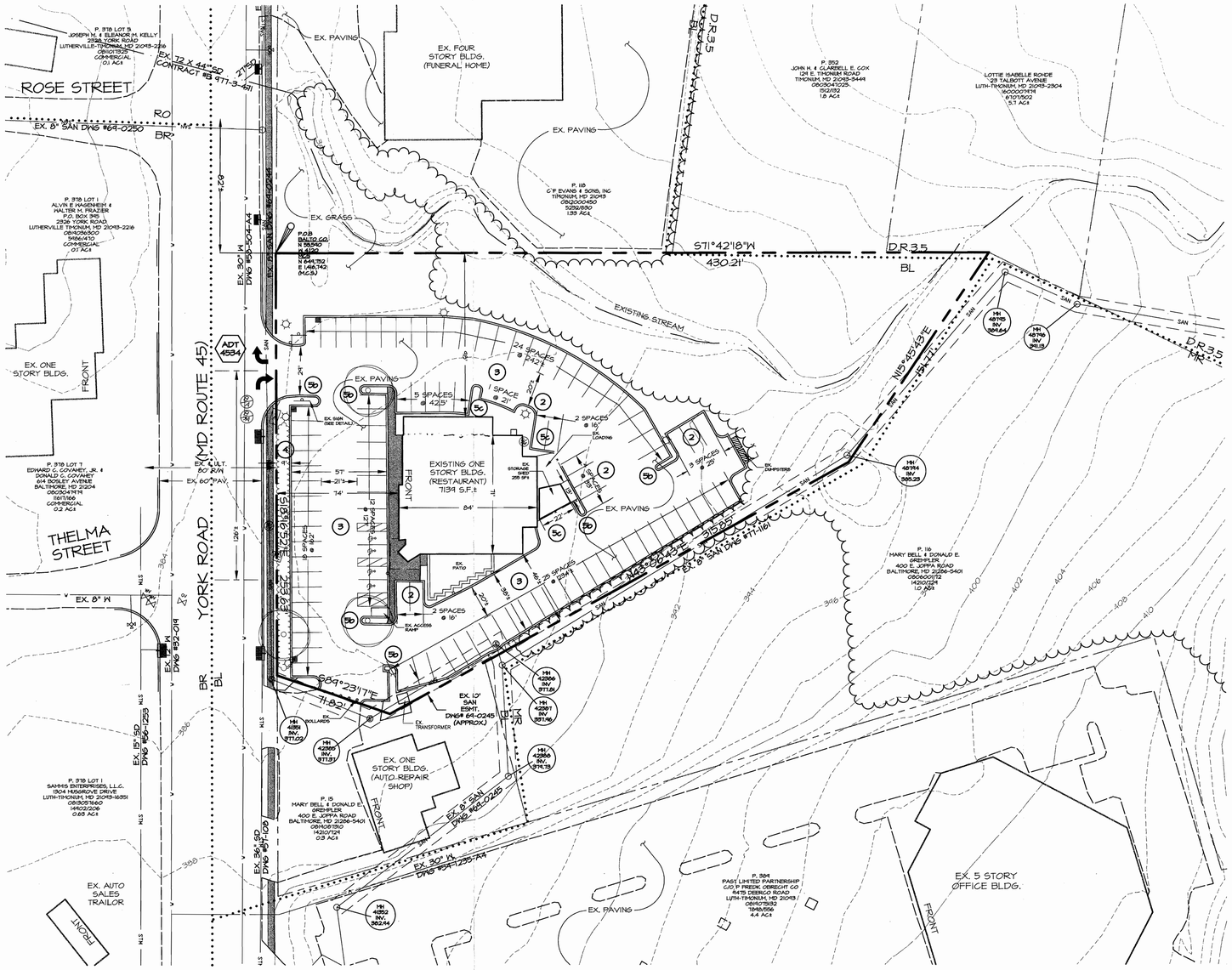

GENERAL NOTES:

1. DEVELOPMENT
   NAME: 2323 York Road
2. APPLICANT: Ari Pollin Still
   1900 E. Northern Parkway
   Baltimore, MD 21243
   410.323.3900
   ATTN: John J. Mitchering
3. OWNER: Albert P. & Freida G. Schaefer
   c/o HMS Dept. #1026
   10400 Fernwood Road
   Bethesda, Md 20817-1109
4. PLAN PREPARED BY: D.S. Thaler & Associates, Inc.
   7115 Ambassador Road
   P.O. Box 47428
   Baltimore, Maryland 21244-7428
   (410) 944-3647
   ATTN: Alan E. Scoll, R.L.A.
5. PROPERTY REFERENCES:

Parcel	Tax Map	Grid	Tax Account No.	Deed	ADC-Map
117	51	23	0819009100	3346/154	18-K10

   Boundary: D.S. Thaler & Associates, Inc. (April 2001)
   Topography: Baltimore County GIS (51-C3)
   Utilities: Baltimore County Key Map (51-58)
   Baltimore County Design Drawings as noted
   Zoning: Baltimore County 200 Scale Zoning Map (2000) (NH-14A)
   Floodplain: Per the Flood Insurance Rate Map Panel#240010-0235-B March 2, 1981.
   There is no Floodplain on site
6. GENERAL DATA:
   Election District: 8 Watershed: 11
   Census Tract: 4085.05 Subsewershed: 23
   Councilmanic District: 3
7. SITE INFORMATION:
   A. Acreage: 1.82 Acres (net)
   1.99 Acres (gross: 30' R/W @ 253.63'= 0.17 AC±)
   B. Existing Zoning: BL
   C. Density Calculations:
   FAR Allowed: 3.0 or 260,053 SF
   FAR Existing: 0.08 or 7,394 SF (including existing storage shed)
   (per permit site plan dated 5/16/01)
   (1) D. Parking:
   Required: 16 spaces/1000 SF
   16/1000 x 7,394= 119 spaces
   Existing: 97 spaces
8. UTILITIES: Public water and sewer are provided.
9. USE: The existing use is restaurant.
10. EXISTING: There are no known critical areas, archaeological sites, endangered species, or hazardous materials* on the site. There are no zoning case numbers on file. This site does not lie within the limits of the Chesapeake Bay Critical Area.
    *As known to the applicant; location and description of hazardous materials as defined by section 7-101 of the environmental article of the annotated code of Maryland, as from time to time amended.
11. ROADS: All interior roads are private
12. AVERAGE DAILY TRIPS (ADTS):
    Average daily trips as calculated from the Baltimore County Comprehensive Manual of Development Policy (CMDP)
    Average Daily Trips: 768 ADT/1000SF = 4534 ADTS
13. STORAGE TANKS: There are no known underground storage tanks on site.
14. LIGHTING: Existing lighting is indicated on plan.
15. This property as shown on the plan has been held intact since 1958 (according to the deed). No known part of the gross area of this property as shown on the plan has been utilized, recorded or represented as density or area to support any off-site dwellings.
16. Existing sidewalks are provided along York Road.
17. All parking aisles and maneuvering areas are paved with macadam and permanently striped.
18. According to Glen Hoge, Office of Planning, MTA, the nearest MTA service to this site is 0.3 miles away (bus stop #5 at York Road and Padonia Road).
19. There are no known Areas of Critical State Concern on-site.
20. There are no known limitations established by the Courts, County Board of Appeals, Planning Board or Zoning Commissioner or restrictive covenants recorded with individual or group which would limit proposed development on site.
21. There is no building, property or site within or contiguous to the proposed development included on the Maryland Historical Trust Inventory of Historic Properties, the Baltimore County Preliminary or Final Landmarks List, the National Register of Historic Places, the Maryland Archaeological Survey, or Identification of any Baltimore County Historic District, or National Register District covering the proposed development.
22. No additional information is requested by the Department of Environmental Protection and Resource Management to determine compliance with the Critical Area Local Protection Program pursuant to 26-442(a).
23. Site History:
    Building Permits: B436354 (12.7.00). 2 story storage building
    B372510 (4.15.99). interior alterations
    B364659 (8.23.94). patio
    B341155 (9.14.93). pergola
    DRC #061101D; DIST. 8C3: Development Review Committee granted an A-7 limited exemption per Section 26.117(A)(7) of the Baltimore County Code on June 21, 2001 for a building addition.

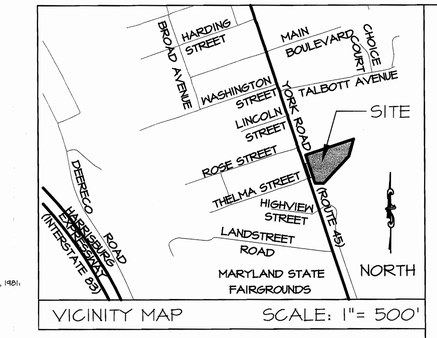

VICINITY MAP SCALE: 1"= 500'

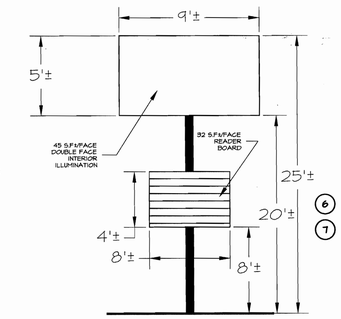

EXISTING FREE STANDING ENTERPRISE SIGN ELEVATION
N.T.S.

REVISED PLAT TO ACCOMPANY PETITION

2323 YORK ROAD

VARIANCE REQUESTS

VARIANCES ARE REFERENCED IN THE PLAN AND DETAILS BY NUMBER AND LETTER OF THE REQUEST IN THE FOLLOWING MANNER: (5a)

1. From Section 409.6.2. of the Baltimore County Zoning Regulations (BCZR) -
   To allow the existing 97 parking spaces in lieu of 119 spaces required.
2. From Section 409.3 (BCZR) -
   To allow standard angled parking spaces eight feet (8') wide in lieu of 8.5 feet required.
3. From Section 409.4.c. (BCZR) -
   To allow parking aisle widths of 20 feet in lieu of 22 feet required.
4. From Section 409.8.A.4. (BCZR) -
   To allow a nine foot (9') setback from parking to a street right-of-way in lieu of 10 feet required.
5. From Section 409.8.A.1. (BCZR) and the Baltimore County Landscape Manual as follows:
   a. Part III. B.2.a.
      To allow three (3) percent of the parking lot to be internal islands in lieu of seven percent (7%) required.
   b. Part III. B.2.c.
      To allow parking islands 2.5 feet wide in lieu of nine feet (9') required.
   c. Part III. B.2.d.
      To allow six inch (6") setback parking-to-building in lieu of six feet (6') required.
6. And any other variances deemed necessary by the Zoning Commissioner.

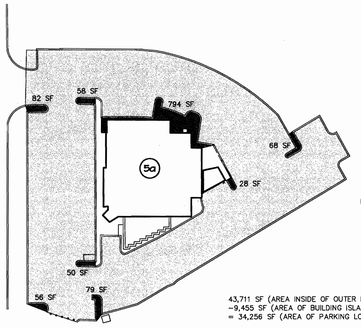

ISLAND AREAS
82 SF
58 SF
794 SF
68 SF
28 SF
79 SF
50 SF
56 SF
1215 SF TOTAL

43,711 SF (AREA INSIDE OF OUTER PARKING LOT CURB)
-9,455 SF (AREA OF BUILDING ISLAND)
= 34,256 SF (AREA OF PARKING LOT)

1,215 SF (TOTAL ISLAND AREAS) / 34,257 SF (AREA PARKING LOT) = .035
3.5% OF PARKING LOT SPACE IN ISLANDS

PARKING ISLAND STUDY
1" = 50'

0 15 30 60 90
SCALE: 1"=30'

NORTH

LEGEND

EXISTING

TRACT BOUNDARY	ROAD/DRIVE
OTHER PROPERTY LINE	
BL ZONING BOUNDARY	CURB
D.R. 3.5 ZONING BOUNDARY	
EASEMENT	SAN SANITARY SEWER
CONTOUR	STM STORM DRAIN
	WATER LINE
TREE LINE	LIGHT POLE
	UTILITY POLE

PROJECT NAME: 2323 YORK ROAD	REVISIONS: 2.20.02 REMOVE VARIANCE REQUEST #6 & #7
PLAN TITLE: REVISED PLAT TO ACCOMPANY ZONING PETITION	
COUNCILMANIC DIST.: 3	
ELECTION DIST.: 8	
APPROVAL:	

D. S. THALER & ASSOC., INC.
CIVIL ENGINEERS
LANDSCAPE ARCHITECTS
SURVEYORS
LAND PLANNERS
7115 AMBASSADOR ROAD
P.O. BOX 47428
BALTIMORE, MARYLAND 21244-7428
(410) 944-ENGR, (410) 944-3647

STATE OF MARYLAND NO. 854 LANDSCAPE ARCHITECT

DATE: 11-21-01
SCALE: 1"= 30'
C.I.: 2'
PROJ. NO.: 02369A
SHEET 1 OF 1

ork Road\Planning\Dwgs\Bound\VARIANCE2.20.02.dwg Wed Feb 20 11:19:06 2002 DRB

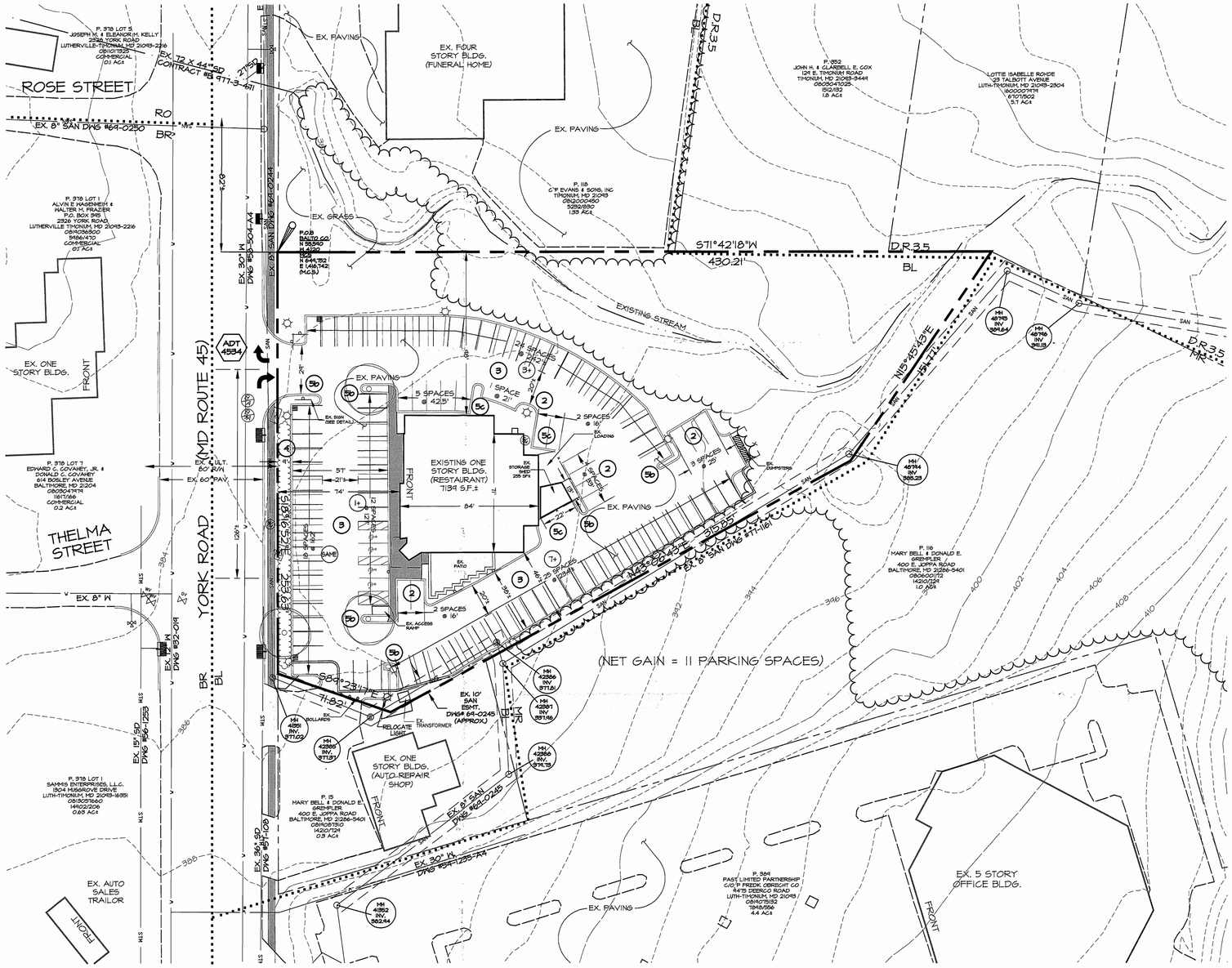
ROSE STREET
YORK ROAD (MD. ROUTE 45)
THELMA STREET
EXISTING ONE STORY BLDG. (RESTAURANT) 7,394 S.F.±
EX. FOUR STORY BLDG. (FUNERAL HOME)
EX. ONE STORY BLDG. (AUTO REPAIR SHOP)
EX. AUTO SALES TRAILOR
EX. 5 STORY OFFICE BLDG.
EXISTING STREAM
S71°42'18"W 430.21'
N15°45'43"E 54.72'
N65°30'43"E 315.85'
S86°23'33"E 71.82'
(NET GAIN = 11 PARKING SPACES)
EX. PAVING
EX. GRASS
5 SPACES @ 42.5'
1 SPACE @ 21'
2 SPACES @ 16'
9 SPACES @ 20'
24 SPACES @ 20'
EX. 10' SAN ESMT. DWG# 64-0245 (APPROX)
EX. 8" SAN DWG #64-0250
EX. 72" X 44"SD CONTRACT #977-3-451
EX. 30" W DWG #63-504-A4
EX. 15" SD DWG #62-1255
EX. 36" SD DWG #63-0146
EX. 12" SD DWG #63-019
EX. 8" W
EX. 6" ULT. 60' R/W
EX. 60' PAV.
EX. 30" W DWG #63-504-A4
EX. 8" SAN DWG #71-1161
EX. 10' SAN ESMT. DWG# 64-0245
EX. 8" SAN DWG #64-0250
EX. 8" SAN DWG #64-0245
P. 318 LOT 5 JOSEPH M. & ELEANOR M. KELLY 2328 YORK ROAD LUTHERVILLE-TIMONIUM, MD 21093-2216 08/01/1929 COMMERCIAL (.01 AC)
P. 318 LOT 1 ALVIN E. MASENHEIMER & HALTER M. FRAZIER P.O. BOX 995 2326 YORK ROAD LUTHERVILLE TIMONIUM, MD 21093-2216 08/10/1950 9486/470 COMMERCIAL (.17 AC)
P. 318 LOT 7 EDWARD C. COVAHEY, JR. & DONALD C. COVAHEY 614 BOSLEY AVENUE BALTIMORE, MD 21204 08/20/1947 19117/66 COMMERCIAL (0.2 AC)
P. 318 LOT 1 SAMMA ENTERPRISES, L.L.C. 1304 MISBROVER DRIVE LUTHVTIMONIUM, MD 21093-6351 08/13/1960 14022/206 (0.83 AC)
P. 352 JOHN H. & CLARIBELL E. COX 124 E. TIMONIUM ROAD TIMONIUM, MD 21093-3441 08/20/1925 1512/132 (1.8 AC)
LOTTIE ISABELLE ROHDE 23 TALBOTT AVENUE LUTHVTIMONIUM, MD 21093-2304 (600/00/1979) 6707/502 (3.7 AC)
P. 118 C.P. EVANS & SONS, INC TIMONIUM, MD 21093 08/20/1940 5292/330 (1.33 AC)
P. 116 MARY BELL & DONALD E. GREIMPLER 400 E. JOPPA ROAD BALTIMORE, MD 21286-5401 08/14/1951 14201/124 (1.0 AC)
P. 15 MARY BELL & DONALD E. GREIMPLER 400 E. JOPPA ROAD BALTIMORE, MD 21286-5401 08/14/1951 14201/124 (.03 AC)
P. 384 PAST LIMITED PARTNERSHIP C/O M FREDK. OBRECHT CO 8475 DEERCO ROAD LUTH-TIMONIUM, MD 21093 08/14/1951 1848/556 (4.4 AC)
EX. 10' SAN ESMT. DWG# 64-0245 (APPROX)
EX. 8" SAN DWG #64-0250
EX. 30" W DWG #63-504-A4
EX. 8" SAN DWG #71-1161
EX. 8" SAN DWG #64-0250
EX. 8" SAN DWG #64-0245
EX. 30" W DWG #63-504-A4
EX. 36" SD DWG #63-0146
EX. 12" SD DWG #63-019
EX. 15" SD DWG #62-1255
MH 40785 INV. 395.64
MH 40786 INV. 393.9
MH 40784 INV. 395.23
MH 42366 INV. 371.61
MH 42367 INV. 391.16
MH 42366 INV. 371.73
MH 42362 INV. 392.44
MH 40351 INV. 377.29
MH 42362 INV. 377.57
EX. BOLLARDS
RELOCATE LIGHT
TRANSFORMER
EX. 6" SAN DWG #64-0245
EX. 8" SAN DWG #64-0250
EX. 8" SAN DWG #64-0245
EX. 30" W DWG #63-504-A4
EX. 8" SAN DWG #71-1161

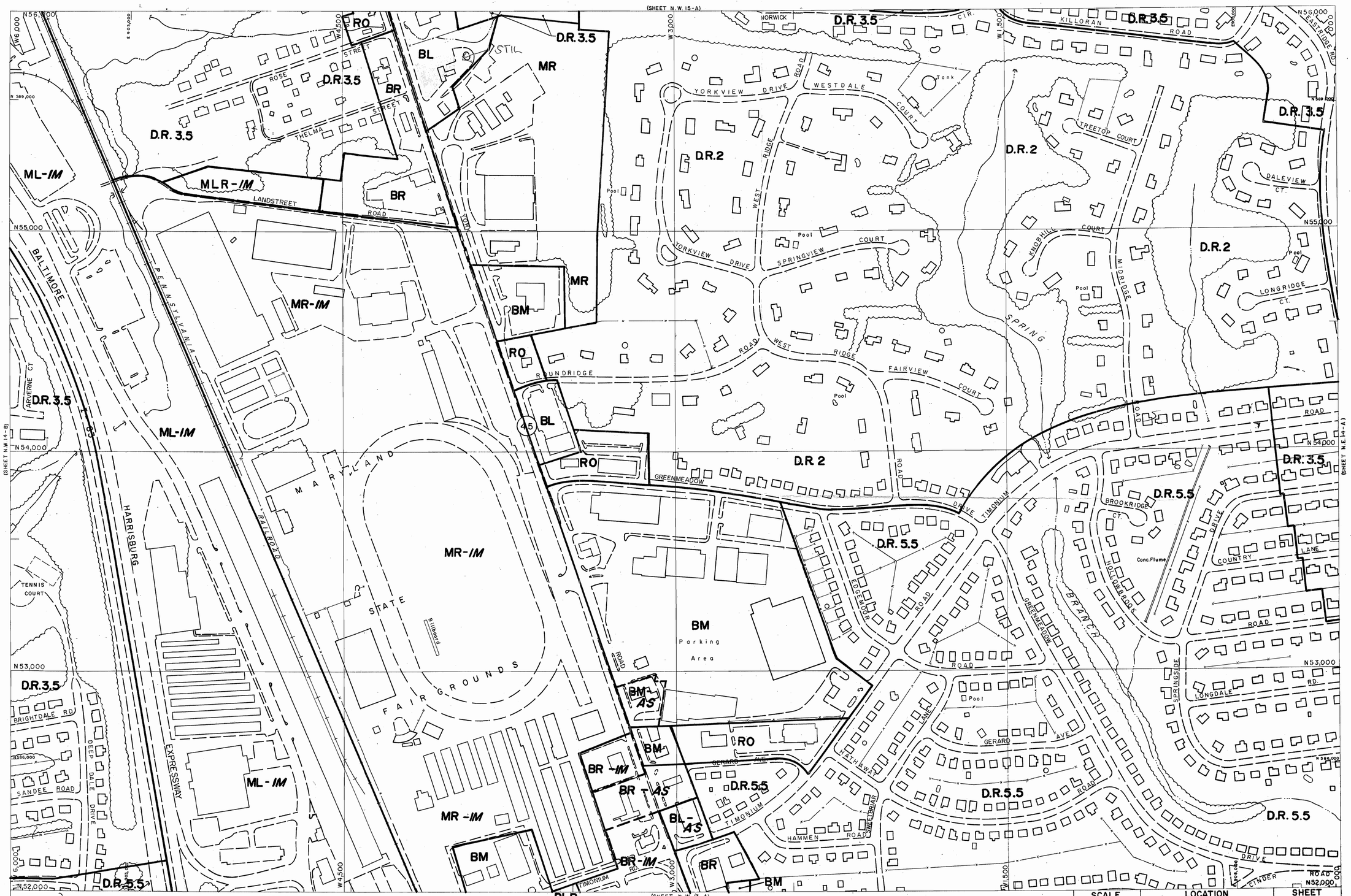

S-NE R-NW

2000 COMPREHENSIVE ZONING MAP
ADOPTED by
THE BALTIMORE COUNTY COUNCIL
OCTOBER 16, 2000
Bills Nos. 87-00, 88-00, 89-00, 90-00, 91-00, 92-00, 93-00.

Joseph Bartenfelder
Chairman, County Council

THIS MAP HAS BEEN REVISED IN SELECTED AREAS.
TOPOGRAPHY COMPILED BY PHOTOGRAMMETRIC METHODS
BY BUCHART-HORN, INC. BALTIMORE, MD. 21210

BALTIMORE COUNTY
OFFICE OF PLANNING AND ZONING
OFFICIAL ZONING MAP

SCALE	LOCATION	SHEET
1" = 200'±	TIMONIUM	N.W. 14-A
DATE OF PHOTOGRAPHY JANUARY 1986		

NW 14 A

PC Exh. 5

P.C. Ch. 2

NOTE:
DIKES TO BE REPAIRED DAILY AFTER UTILITY CONSTRUCTION.

STONE OUTLET SEDIMENT TRAP ST V #1

DRAINAGE AREA =	2.5 AC.
STORAGE REQ'D =	4500 c.f.
STORAGE SHOWN =	4500 c.f.
STONE WEIR CREST ELEV. =	384.0
EXIST. GROUND @ WEIR =	383.0
BOTTOM ELEV. =	379.0
BOTTOM DIM. =	55' x 10'
CLEANOUT ELEV. =	381.5
EMBANKMENT ELEV. =	386.0
OUTLET LENGTH =	10'
SIDE SLOPES =	1:1

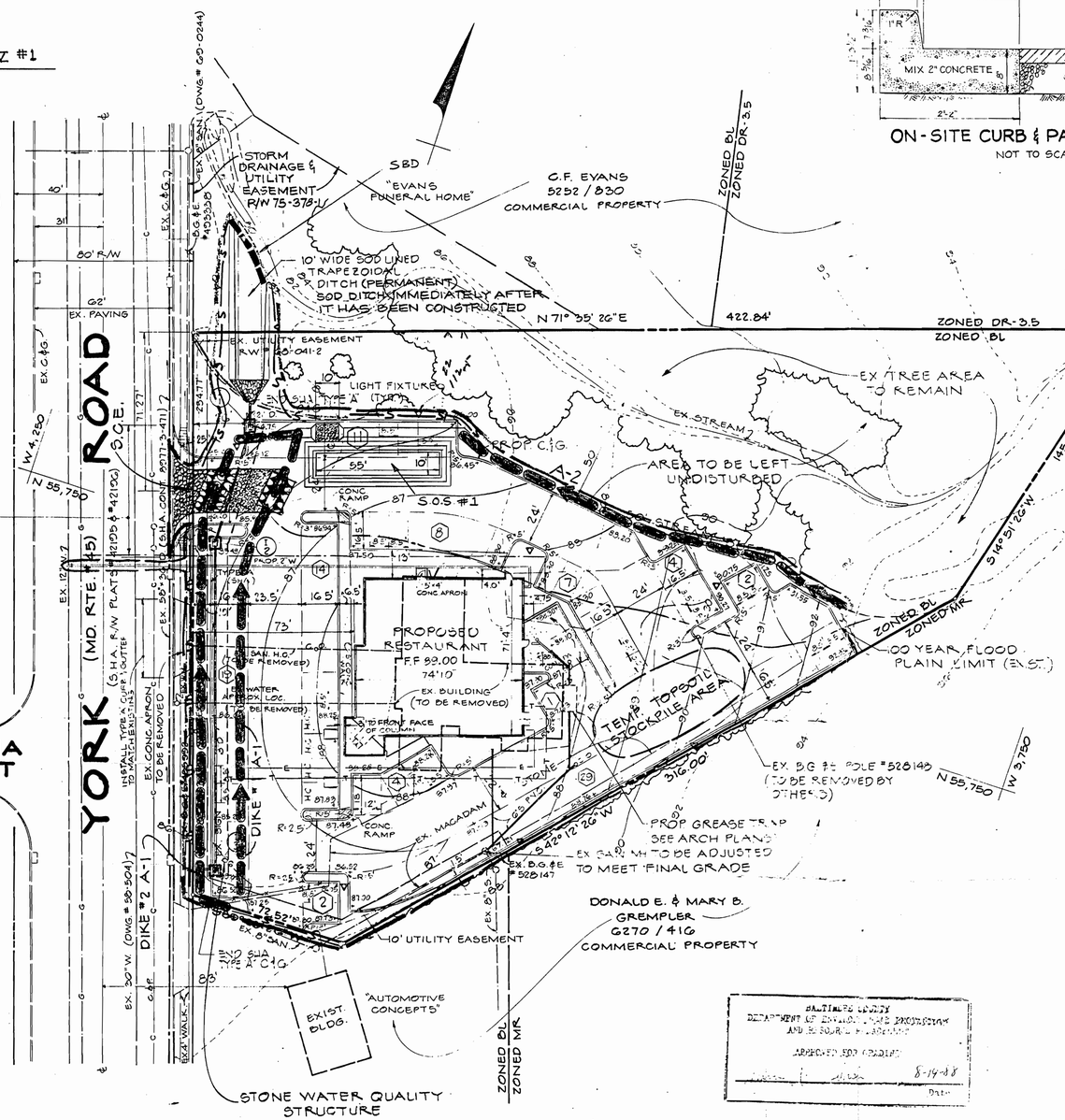

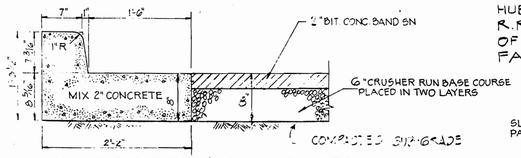

ON-SITE CURB & PAVING DETAIL
NOT TO SCALE

BENCH MARK:
HUB # 12263 EL. 412.25
R.R. SPIKE IN MAC. ON S.W. SIDE OF YORK ROAD AT N. GATE OF FAIRGROUNDS

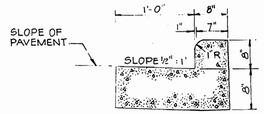

SHA STANDARD TYPE 'A' CURB & GUTTER
NOT TO SCALE

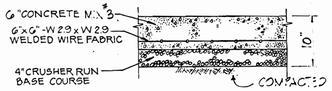

CONCRETE PAVING DETAIL (TYP.)
NOT TO SCALE

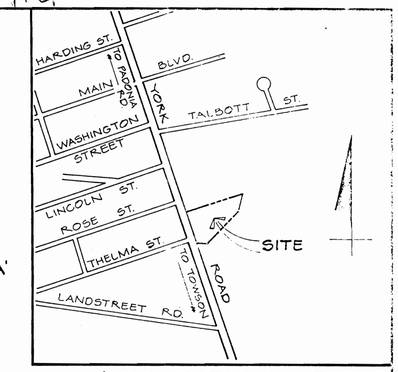

LOCATION MAP
SCALE: 1" = 500'

GENERAL NOTES

1. AREA OF SITE 1.804 AC± (78,582 ☐') GROSS AREA 1.98 AC± (86,249 ☐')
2. EXISTING ZONING: BL
3. ELECTION DISTRICT 8
4. COUNCILMANIC DISTRICT 4, CENSUS TRACT 4085.05
5. WATERSHED 11, SUBSEWERSHED 32
6. EXISTING USE: COMMERCIAL, OFFICE
7. PROPOSED USE: COMMERCIAL, RESTAURANT
8. DEED REFERENCE: ALBERT P. & FRIEDA G. SCHAEFER 3946/154
9. PARKING DATA:
   A. REQUIRED (1 SPACE PER 50 S.F.) 5,025 ☐'/50 = 101
   B. PROPOSED = 101 INCL. 5 HANDICAPPED
10. FLOOR AREA RATIO
    A. PERMITTED = 25.0 (2.0 x 86,225.34 x 3.0)
    B. PROPOSED = 0.061 (5,225 ☐' ÷ 86,225.34)
11. SITE IS LOCATED IN THE BEAVER DAM RUN DRAINAGE AREA
12. TAX ACCOUNT No. 08-0910006700
13. SITE GRANTED DRG WAIVER DATED 2-13-84 [illegible] AND PUBLIC WORKS REF. 22 [illegible] 3-21-88 [illegible]
14. CONTRACTOR TO EXCAVATE FOR LOCATION & DEPTH OF EXISTING UTILITIES BEFORE LAYING ANY PIPE.
15. ALL ON SITE UTILITIES TO BE BUILT UNDER BALTO. COUNTY STANDARD SPECIFICATIONS AND DETAILS FOR CONSTRUCTION AND BALTIMORE COUNTY PLUMBING CODE BY A QUALIFIED UTILITY CONTRACTOR.
16. OBSTRUCTIONS SHOWN ON THE PLAN ARE FOR THE CONVENIENCE OF THE CONTRACTOR ONLY. THE CORRECTNESS OF THE INFORMATION GIVEN IS NOT WARRANTED OR GUARANTEED BY THE OWNER OR ENGINEER. CONTRACTOR SHALL VERIFY ALL [illegible] INFORMATION TO HIS OWN SATISFACTION.
17. CONTRACTOR SHALL RESTORE ALL DISTURBED PAVING, SIDEWALKS, OR LAWNS AFFECTED BY CONSTRUCTION SHOWN HERE[illegible] [illegible] EXISTING PERIOD [illegible]
18. ABANDONMENT OF EXISTING WATER [illegible] TO BE DONE PER BALTIMORE [illegible] REGULATIONS ARTICLE 37 [illegible]
19. CONTRACTOR SHALL NOTIFY THE FOLLOWING UTILITIES AT LEAST 3 DAYS BEFORE STARTING WORK: BELL TELEPHONE [illegible] (532-[illegible] EXT. [illegible]), LONG DISTANCE CABLE TV (538-[illegible]), EXT. [illegible]; BALTO. G&E. (532-[illegible] EXT. [illegible])
20. SEE SEDIMENT CONTROL PLAN FOR SEDIMENT CONTROL DETAILS.
21. SEE LANDSCAPE PLAN FOR LANDSCAPING DETAILS.
22. HANDICAPPED RAMPS SHALLER [illegible] AT A CURB RETURNS SEE STD. DETAILS [illegible]
23. ALL CONSTRUCTION WITHIN THE [illegible] (MD. RTE. 45) TO BE DONE UNDER SHA PERMIT NO.
24. THE EXISTING SANITARY SEWER HOUSE CONNECTION SHALL BE ABANDONED PER BALTIMORE COUNTY SPECIFICATIONS.
25. ALL SEWER CLEANOUT, INSPECTION AREAS TO BE SET FLUSH WITH FINISHED GRADE.
26. ⊕ LIGHTS TO BE McGRAW-EDISON TDS-3[illegible] WITH 150 WATT HPS LAMPS MOUNTED ON 15' POLES

LEGEND

EXISTING CONTOUR	---- 88 ----
PROPOSED CONTOUR	88
EARTH DIKE	
SILT FENCE	S
STABILIZED CONSTRUCTION ENTRANCE	
LIMIT OF DISTURBANCE	
INLET PROTECTION	
STRAW BALE DIKE	
MOUNTABLE BERM	

TOTAL DISTURBED AREA = 46,275 S.F. = 1.06 AC

101

APPROVED FOR SEDIMENT CONTROL

BALTIMORE COUNTY
DEPARTMENT OF ENVIRONMENTAL PROTECTION AND RESOURCE MANAGEMENT
SEDIMENT CONTROL DIVISION
APPROVED FOR SEDIMENT CONTROL
Approved by [signature] 8-19-88 Date
Reviewed by [signature] 8-19-88 Date
If application for permit has not been made within one year of approval date, this plan must be resubmitted.

BALTIMORE COUNTY
DEPARTMENT OF ENVIRONMENTAL PROTECTION AND RESOURCE MANAGEMENT
APPROVED SED CONTROL
[signature] 8-19-88
Date

104764

1.82 Net
2.00

R L Umbarger
1,875 ½

DWG. NO. C-3

Drafting U.K.D.	DATE	REVISIONS
Check T.J.R.		
Design D.N.M.		
Check R.L.S.	1-20-88	BLDG. FTPRT. & PARKING LAYOUT

KIDDE CONSULTANTS, INC.
ENGINEERS • PLANNERS • SURVEYORS
1020 CROMWELL BRIDGE ROAD, BALTIMORE, MARYLAND 21204, 301-321-5500

OWNER
MRS. FRIEDA G. SCHAEFER
303 VALDENE CT.
TIMONIUM, MD. 21093 252-7675

DEVELOPER
MARRIOTT CORPORATION
MARRIOTT DRIVE
WASHINGTON, D.C. 20058 (301) 897-7705

SEDIMENT AND EROSION CONTROL
BOB'S BIG BOY TIMONIUM
2323 YORK ROAD TIMONIUM, MD.

SHEET	DATE	JOB NUMBER
1 OF 2	DEC. 1987	01-87058M
	SCALE 1" = 30'	

W.O. 47762

PC Exh. 1

Produced by Baltimore County GIS Services Unit
Copyright 2001
VARGIS LLC, Herdon, Virginia
All Rights Reserved
Date of Map Production: December 10, 2002.

0 25 50 100 150 200 Feet

N
W E
S

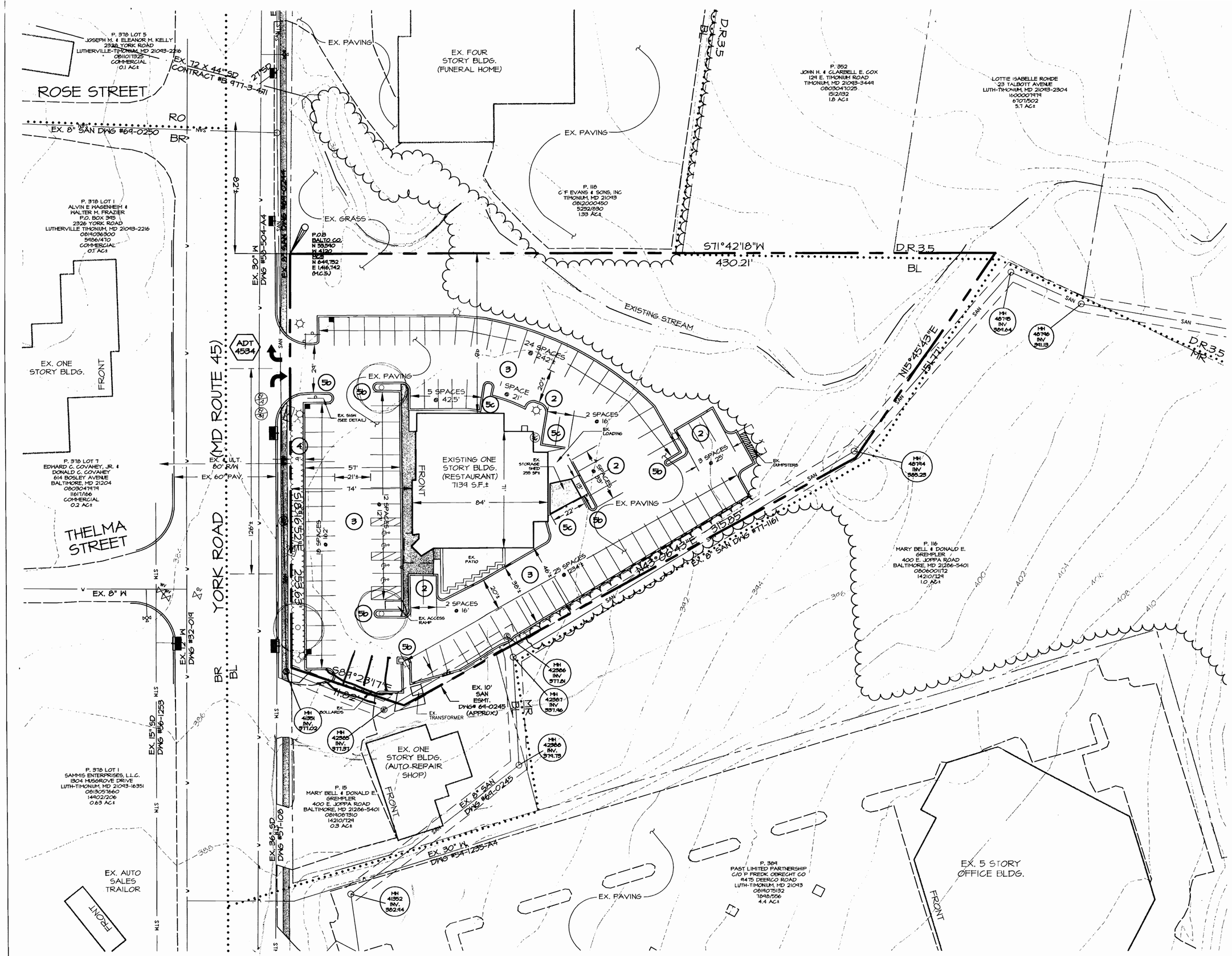

1. DEVELOPMENT NAME: 2323 York Road

2. APPLICANT: An Potin Still
1400 E. Northern Parkway
Baltimore, MD 21213
410.323.3400
ATTN: John J. Mitcherling

3. OWNER: Albert P. & Freida G. Schaefer
c/o: HMS Dept. #406
10400 Fernwood Road
Bethesda, Md 20817-1109

4. PLAN PREPARED BY: D.S. Thaler & Associates, Inc.
7115 Ambassador Road
P.O. Box 47428
Baltimore, Maryland 21244-7428
(410) 944-3647
ATTN: Alan E. Scoll, R.L.A.

5. PROPERTY REFERENCES:

Parcel	Tax Map	Grid	Tax Account No.	Deed	ADC-Map
117	51	23	0816009100	3346/154	18-K10

Boundary: D.S. Thaler & Associates, Inc. (April 2001)
Topography: Baltimore County GIS (51-C3)
Utilities: Baltimore County Key Map (5-5E)
Baltimore County Design Drawings as noted
Zoning: Baltimore County 200 Scale Zoning Map (2000) (NW-14A)
Floodplain: Per the Flood Insurance Rate Map Panel#240010-0235-B March 2, 1981.
There is no Floodplain on site

6. GENERAL DATA:
Election District: 8 Watershed: 11
Census Tract: 4085.05 Subwatershed: 23
Councilmanic District: 3

7. SITE INFORMATION:
A. Acreage: 1.82 Acres (net)
1.94 Acres (gross: 30' R/W @ 253.63'± 0.17 AC±)

B. Existing Zoning: BL

C. Density Calculations:
FAR Allowed: 3.0 or 260,053 SF
FAR Existing: 0.08 or 7,344 SF (including existing storage shed)
(per permit site plan dated 5/16/01)

(1) D. Parking:
Required: 16 spaces/1000 SF
16/1000 x 7,344± 118 spaces
Existing: 97 spaces

8. UTILITIES: Public water and sewer are provided.

9. USE: The existing use is restaurant.

10. EXISTING: There are no known critical areas, archaeological sites, endangered species, or hazardous materials* on the site.
There are no zoning case numbers on file.
This site does not lie within the limits of the Chesapeake Bay Critical Area.

*As known to the applicant; location and description of hazardous materials as defined by section 7-101 of the environmental article of the annotated code of Maryland, as from time to time amended.

11. ROADS: All interior roads are private

12. AVERAGE DAILY TRIPS (ADTS).)
Average daily trips as calculated from the Baltimore County Comprehensive Manual of Development Policy (CMDP)
Average Daily Trips: 168 ADT/1000SF = 4534 ADTS

13. STORAGE TANKS: There are no known underground storage tanks on site.

14. LIGHTING: Existing lighting is indicated on plan.

15. This property as shown on the plan has been held intact since 1958 (according to the deed). No known part of the gross area of this property as shown on the plan has been utilized, recorded or represented as density or area to support any off-site dwellings.

16. Existing sidewalks are provided along York Road.

17. All parking aisles and maneuvering areas are paved with macadam and permanently striped.

18. According to Glen Hoge, Office of Planning, MTA, the nearest MTA service to this site is 0.3 miles away (bus stop #8 at York Road and Padonia Road).

19. There are no known Areas of Critical State Concern on-site.

20. There are no known limitations established by the Courts, County Board of Appeals, Planning Board or Zoning Commissioner or restrictive covenants recorded with individual or group which would limit proposed development on site.

21. There is no building, property or site within or contiguous to the proposed development included on the Maryland Historical Trust Inventory of Historic Properties, the Baltimore County Preliminary or Final Landmarks List, the National Register of Historic Places, the Maryland Archaeological Survey, or Identification of any Baltimore County Historic District, or National Register District covering the proposed development.

22. No additional information is requested by the Department of Environmental Protection and Resource Management to determine compliance with the Critical Area Local Protection Program pursuant to 26-442(a).

23. Site History:
Building Permits: B436354 (12.7.00). 2 story storage building
B372570 (4.15.99). interior alterations
B384654 (8.23.99). patio
B341155 (4.14.99). pergola

DRC #061101D; DIST. BC3: Development Review Committee granted an A-7 limited exemption per Section 26.171(A)(7) of the Baltimore County Code on June 21, 2001 for a building addition.

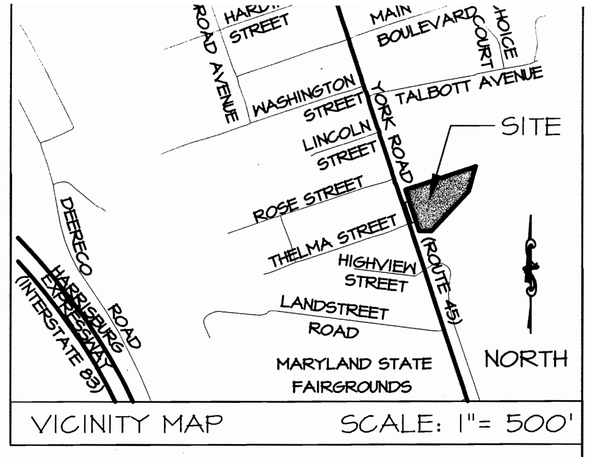

VICINITY MAP SCALE: 1"= 500'

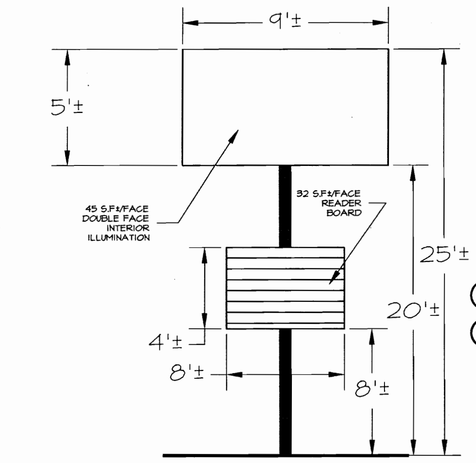

EXISTING FREE STANDING ENTERPRISE SIGN ELEVATION
N.T.S.

REVISED PLAT TO ACCOMPANY ZONING PETITION

2323 YORK ROAD

0 15 30 60 90
SCALE: 1"=30'

NORTH

VARIANCE REQUESTS

VARIANCES ARE REFERENCED IN THE PLAN AND DETAILS BY NUMBER AND LETTER OF THE REQUEST IN THE FOLLOWING MANNER: (5a)

1. From Section 409.6.2. of the Baltimore County Zoning Regulations (BCZR) -

   To allow the existing 97 parking spaces in lieu of 119 spaces required.

2. From Section 409.3 (BCZR) -

   To allow standard angled parking spaces eight feet (8') wide in lieu of 8.5 feet required.

3. From Section 409.4.C. (BCZR) -

   To allow parking aisle widths of 20 feet in lieu of 22 feet required.

4. From Section 409.8.A.4. (BCZR) -

   To allow a nine foot (9') setback from parking to a street right-of-way in lieu of 10 feet required.

5. From Section 409.8.A.1. (BCZR) and the Baltimore County Landscape Manual as follows:

   a. Part III. B.2.a.

      To allow three (3) percent of the parking lot to be internal islands in lieu of seven percent (7%) required.

   b. Part III. B.2.c.

      To allow parking islands 2.5 feet wide in lieu of nine feet (9') required.

   c. Part III. B.2.d.

      To allow six inch (6") setback parking-to-building in lieu of six feet (6') required.

6. And any other variances deemed necessary by the Zoning Commissioner.

LEGEND

EXISTING

TRACT BOUNDARY	ROAD/DRIVE
OTHER PROPERTY LINE	
BL ZONING BOUNDARY	GARD
DR 3.5	
EASEMENT	SAN — SANITARY SEWER
CONTOUR	STM — STORM DRAIN
	W — WATER LINE
TREE LINE	LIGHT POLE
	UTILITY POLE

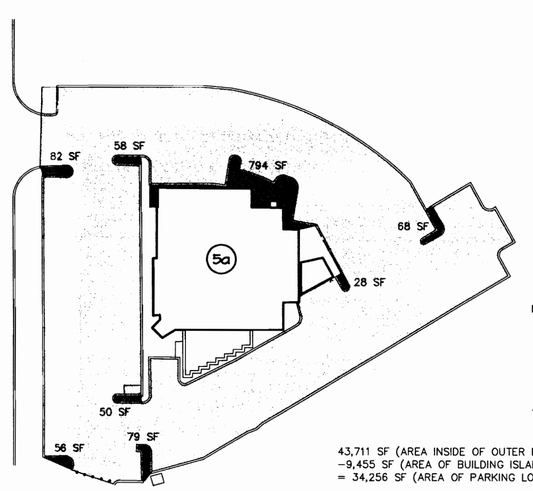

ISLAND AREAS
82 SF
58 SF
794 SF
68 SF
28 SF
79 SF
50 SF
56 SF
1215 SF TOTAL

43,711 SF (AREA INSIDE OF OUTER PARKING LOT CURB)
-9,455 SF (AREA OF BUILDING ISLAND)
= 34,256 SF (AREA OF PARKING LOT)

1,215 SF (TOTAL ISLAND AREAS) / 34,257 SF (AREA PARKING LOT) = .035
3.5% OF PARKING LOT SPACE IN ISLANDS

PARKING ISLAND STUDY
1" = 50'

PROJECT NAME: 2323 YORK ROAD

PLAN TITLE: REVISED PLAT TO ACCOMPANY ZONING PETITION

COUNCILMANIC DIST.: 3

ELECTION DIST.: 8

APPROVAL:

REVISIONS: 2.20.02 REMOVE VARIANCE REQUEST #6 & #7

Pat. Formerly 1-C

D S T & A

D. S. THALER & ASSOC., INC.

CIVIL ENGINEERS
LANDSCAPE ARCHITECTS

SURVEYORS
LAND PLANNERS

7115 AMBASSADOR ROAD
P.O. BOX 47428
BALTIMORE, MARYLAND 21244-7428
(410) 944-ENGR, (410) 944-3647

STATE OF MARYLAND LANDSCAPE ARCHITECT NO. 654

DATE: 11-21-01
SCALE: 1"= 30'
C.I.: 2'
PROJ. NO.: 02369A
SHEET 1 OF 1

R:\2323 York Road\Planning\Dwgs\Bound\VARIANCE2.20.02.dwg Wed Feb 20 11:19:06 2002 DRB

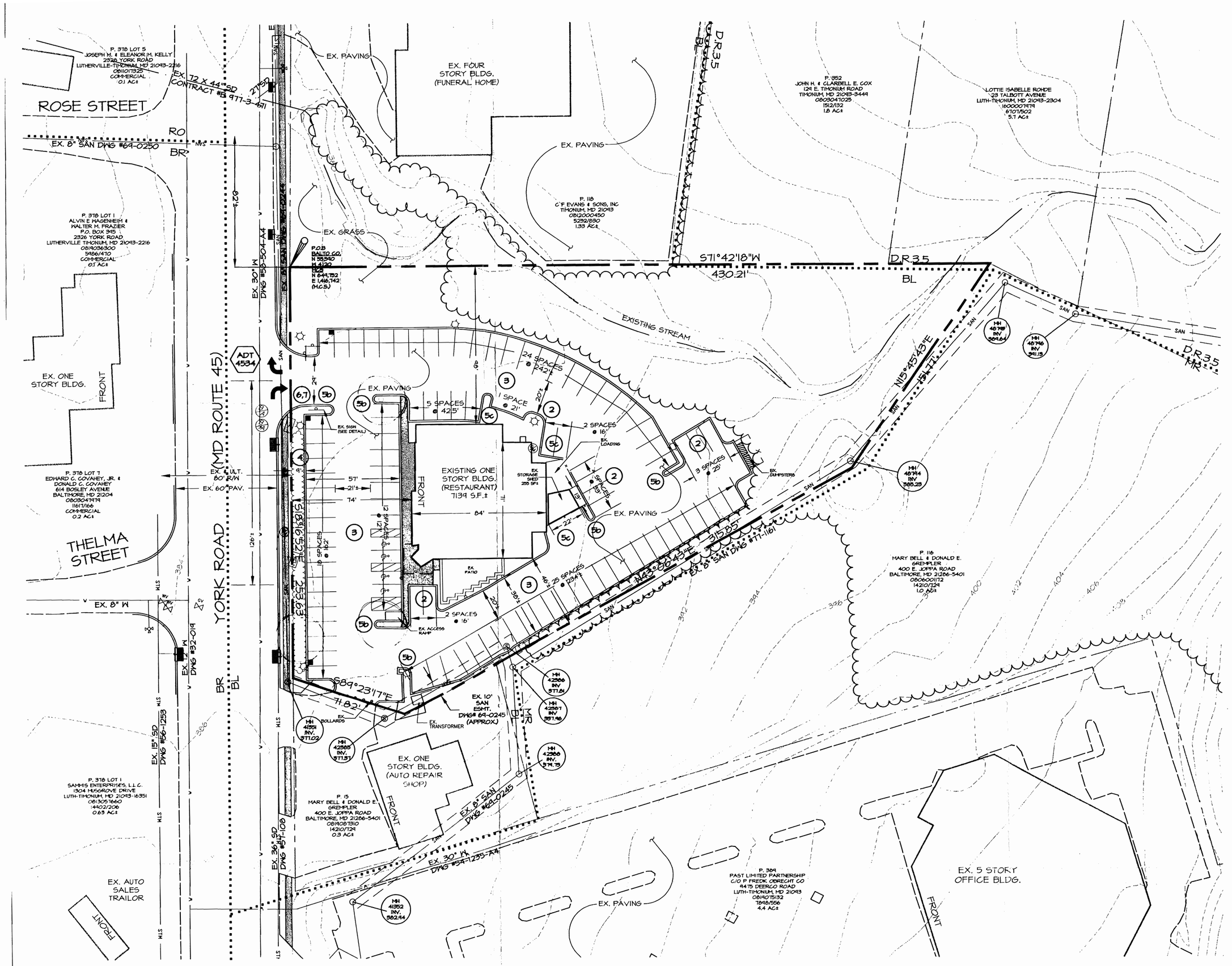

GENERAL NOTES:

1. DEVELOPMENT
   NAME: 2323 York Road
2. APPLICANT: An Poitin Still
   1800 E. Northern Parkway
   Baltimore, MD 21218
   410.323.9400
   ATTN: John J. Mitcherling
3. OWNER: Albert P. & Freida G. Schaefer
   c/o: HHS Dept. #106
   10400 Fernwood Road
   Bethesda, Md 20817-1104
4. PLAN PREPARED BY: D.S. Thaler & Associates, Inc.
   7115 Ambassador Road
   P.O. Box 47428
   Baltimore, Maryland 21244-7428
   (410) 944-3647
   ATTN: Alan E. Scoll, R.L.A.
5. PROPERTY REFERENCES:

Parcel	Tax Map	Grid	Tax Account No.	Deed	ADC-Map
1117	51	23	0814004700	3346/154	18-K10

   Boundary: D.S. Thaler & Associates, Inc. (April 2001)
   Topography: Baltimore County GIS (51-C3)
   Utilities: Baltimore County Key Map (5-5E)
   Baltimore County Design Drawings as noted
   Zoning: Baltimore County 200 Scale Zoning Map (2000) (NH-14A)
   Floodplain: Per the Flood Insurance Rate Map Panel#240010-0235-B March 2, 1981:
   There is no Floodplain on site
6. GENERAL DATA:
   Election District: 8 Watershed: 11
   Census Tract: 4085.05 Subsewershed: 23
   Councilmanic District: 3
7. SITE INFORMATION:
   A. Acreage: 1.82 Acrest (net)
   1.99 Acrest (gross: 30' R/W @ 253.63'± 0.17 AC±)
   B. Existing Zoning: BL
   C. Density Calculations:
   FAR Allowed: 3.0 or 260,053 SF
   FAR Existing: 0.08 or 7,394 SF (including existing storage shed)
   (per permit site plan dated 5/16/01)
   (1) D. Parking:
   Required: 16 spaces/1000 SF
   16/1000 x 7,394= 119 spaces
   Existing: 97 spaces
8. UTILITIES: Public water and sewer are provided.
9. USE: The existing use is restaurant.
10. EXISTING: There are no known critical areas, archaeological sites, endangered species, or hazardous materials* on the site.
    There are no zoning case numbers on file.
    This site does not lie within the limits of the Chesapeake Bay Critical Area.

    *As known to the applicant; location and description of hazardous materials as defined by section 7-101 of the environmental article of the annotated code of Maryland, as from time to time amended.
11. ROADS: All interior roads are private
12. AVERAGE DAILY TRIPS (ADTS).)
    Average daily trips as calculated from the Baltimore County Comprehensive Manual of Development Policy (CMDP)
    Average Daily Trips: 168 ADT/10000SF = 4534 ADTS
13. STORAGE TANKS: There are no known underground storage tanks on site.
14. LIGHTING: Existing lighting is indicated on plan.
15. This property as shown on the plan has been held intact since 1958 (according to the deed). No known part of the gross area of this property as shown on the plan has been utilized, recorded or represented as density or area to support any off-site dwellings.
16. Existing sidewalks are provided along York Road.
17. All parking aisles and maneuvering areas are paved with macadam and permanently striped.
18. According to Glen Hoge, Office of Planning, MTA, the nearest MTA service to this site is 0.3 miles away (bus stop #8 at York Road and Padonia Road).
19. There are no known Areas of Critical State Concern on-site.
20. There are no known limitations established by the Courts, County Board of Appeals, Planning Board or Zoning Commissioner or restrictive covenants recorded with individual or group which would limit proposed development on site.
21. There is no building, property or site within or contiguous to the proposed development included on the Maryland Historical Trust Inventory of Historic Properties, the Baltimore County Preliminary or Final Landmarks List, the National Register of Historic Places, the Maryland Archaeological Survey or Identification of any Baltimore County Historic District, or National Register District covering the proposed development.
22. No additional information is requested by the Department of Environmental Protection and Resource Management to determine compliance with the Critical Area Local Protection Program pursuant to 26-442(a).
23. Site History:
    Building Permits: B436354 (12.7.00). 2 story storage building
    B372510 (4.15.99). interior alterations
    B384659 (8.23.99). patio
    B391155 (9.14.99). pergola

    DRC #061101D1, DIST. 8C3: Development Review Committee granted an A-7 limited exemption per Section 26.171(A)(7) of the Baltimore County Code on June 21, 2001 for a building addition.

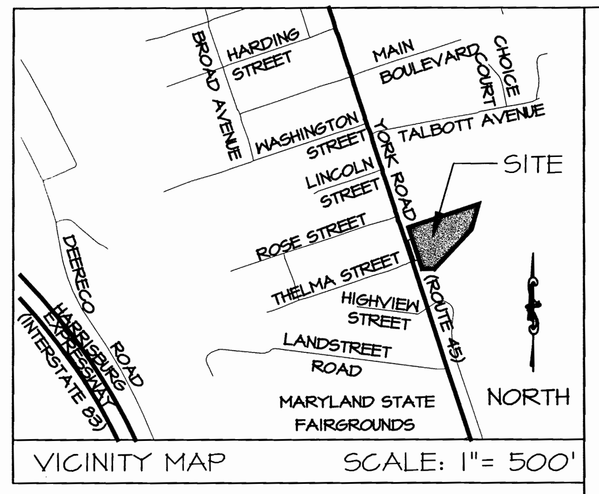

VICINITY MAP SCALE: 1"= 500'

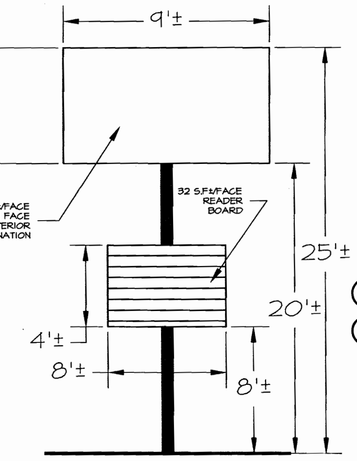

EXISTING FREE STANDING ENTERPRISE SIGN ELEVATION
N.T.S.

PLAT TO ACCOMPANY ZONING PETITION

2323 YORK ROAD

0 15 30 60 90
SCALE: 1"=30'

NORTH

VARIANCE REQUESTS

VARIANCES ARE REFERENCED IN THE PLAN AND DETAILS BY NUMBER AND LETTER OF THE REQUEST IN THE FOLLOWING MANNER: (5a)

1. From Section 409.6.2. of the Baltimore County Zoning Regulations (BCZR) -

   To allow the existing 97 parking spaces in lieu of 119 spaces required.
2. From Section 409.3 (BCZR) -

   To allow standard angled parking spaces eight feet (8') wide in lieu of 8.5 feet required.
3. From Section 409.4.C. (BCZR) -

   To allow parking aisle widths of 20 feet in lieu of 22 feet required.
4. From Section 409.8.A.4. (BCZR) -

   To allow a nine foot (9') setback from parking to a street right-of-way in lieu of 10 feet required.
5. From Section 409.8.A.1. (BCZR) and the Baltimore County Landscape Manual as follows:

   a. Part III. B.2.a.

      To allow three (3) percent of the parking lot to be internal islands in lieu of seven percent (7%) required.

   b. Part III. B.2.c.

      To allow parking islands 2.5 feet wide in lieu of nine feet (9') required.

   c. Part III. B.2.d.

      To allow six inch (6") setback parking-to-building in lieu of six feet (6') required.
6. From Section 450.7.B.1. BCZR -

   To allow a free-standing enterprise sign with a non-contiguous reader-board.
7. From Section 450.7.B.2. BCZR -

   To allow a reader-board of 71.1% (32 SF per face) in lieu of the required 50% (22.5 SF per face) of an erected permitted enterprise sign.
8. And any other variances deemed necessary by the Zoning Commissioner.

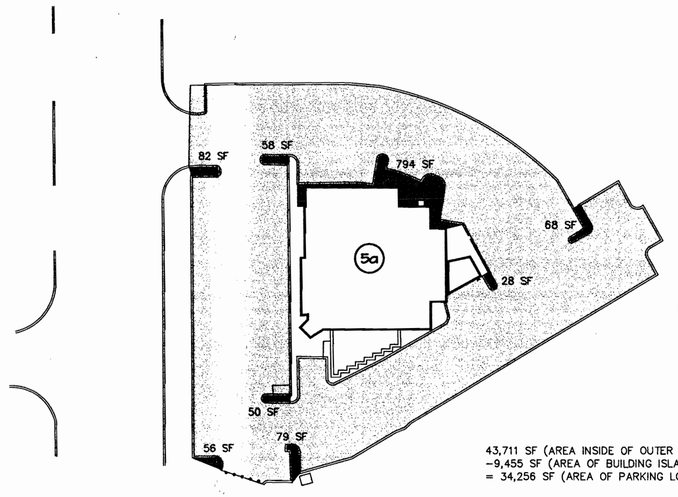

ISLAND AREAS
82 SF
58 SF
794 SF
68 SF
28 SF
79 SF
50 SF
56 SF
1215 SF TOTAL

43,711 SF (AREA INSIDE OF OUTER PARKING LOT CURB)
-9,455 SF (AREA OF BUILDING ISLAND)
= 34,256 SF (AREA OF PARKING LOT)

1,215 SF (TOTAL ISLAND AREAS) / 34,257 SF (AREA PARKING LOT) = .035
3.5% OF PARKING LOT SPACE IN ISLANDS

PARKING ISLAND STUDY
1" = 50'

LEGEND

EXISTING

- TRACT BOUNDARY / OTHER PROPERTY LINE
- ZONING BOUNDARY
- EASEMENT
- CONTOUR
- TREE LINE
- ROAD/DRIVE
- CURB
- SANITARY SEWER
- STORM DRAIN
- WATER LINE
- LIGHT POLE
- UTILITY POLE

PROJECT NAME: 2323 YORK ROAD	REVISIONS:
PLAN TITLE: PLAT TO ACCOMPANY ZONING PETITION	
COUNCILMANIC DIST.: 3	Petitioners
ELECTION DIST.: 8	1-B
APPROVAL:	

DS&A
D. S. THALER & ASSOC., INC.
CIVIL ENGINEERS SURVEYORS
LANDSCAPE ARCHITECTS LAND PLANNERS
7115 AMBASSADOR ROAD
P.O. BOX 47428
BALTIMORE, MARYLAND 21244-7428
(410) 944-ENGR, (410) 944-3647

STATE OF MARYLAND REGISTERED PROFESSIONAL LANDSCAPE ARCHITECT NO. 761

DATE: 11-21-01
SCALE: 1"= 30'
C.I.: 2'
PROJ. NO.: 02369A
SHEET 1 OF 1

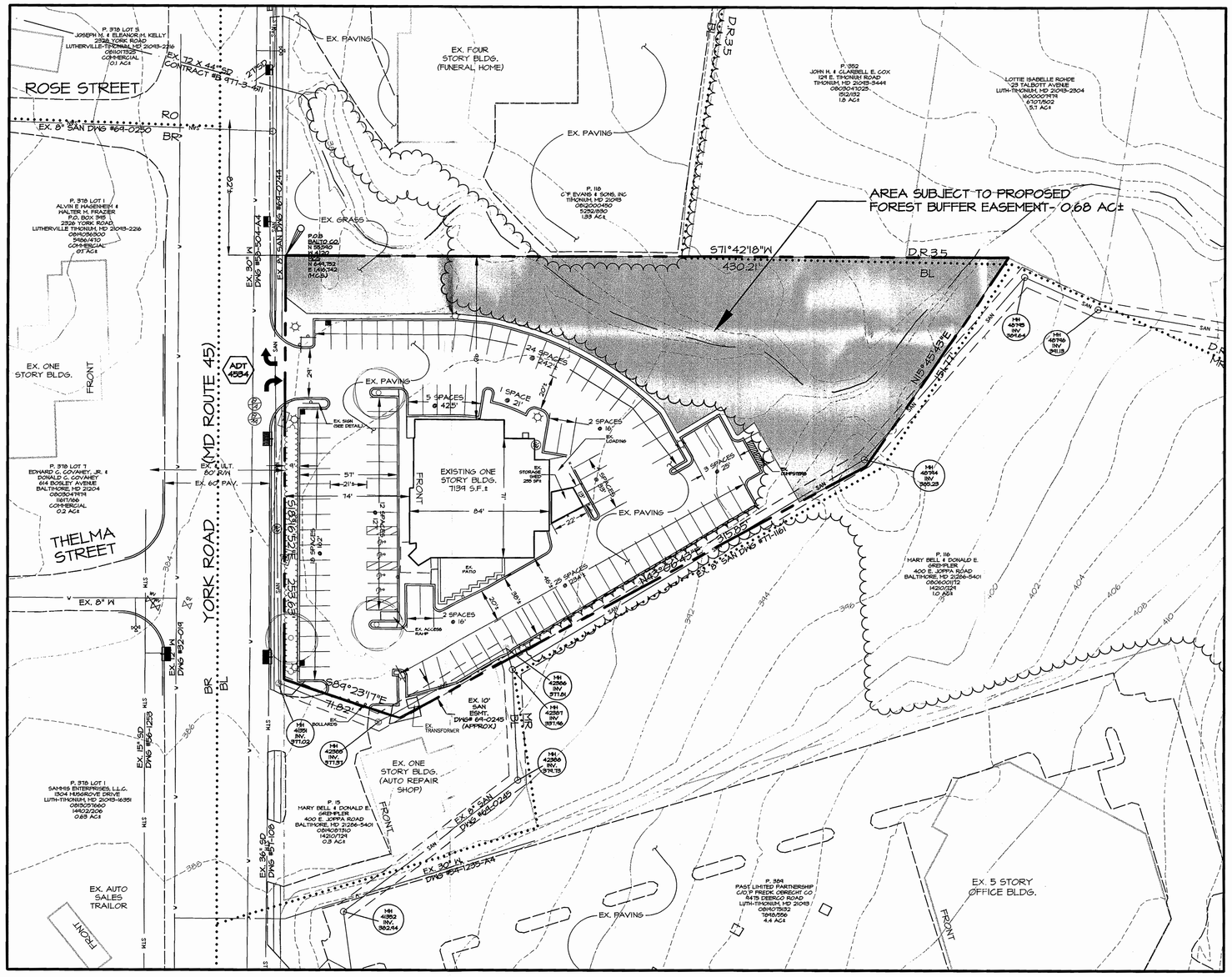

GENERAL NOTES:

1. DEVELOPMENT NAME: 2323 York Road
2. APPLICANT: An Poitin Still
   2323 York Road
   Timonium, MD 21093
   410.560.7900
   ATTN: John J. Mitcherling
3. OWNER: Albert P. & Fredda G. Schaefer
   c/o: HHS Dept. #906
   10400 Fernwood Road
   Bethesda, Md 20817-1109
4. PLAN PREPARED BY: D.S. Thaler & Associates, Inc.
   7115 Ambassador Road
   P.O. Box 47428
   Baltimore, Maryland 21244-7428
   (410) 944-8647
   ATTN: Alan E. Scoll, R.L.A.
5. PROPERTY REFERENCES:

Parcel	Tax Map	Grid	Tax Account No.	Deed	ADC-Map
117	51	23	0814009100	3346/154	18-K10

   Boundary: D.S. Thaler & Associates, Inc. (April 2001)
   Topography: Baltimore County 615 (51-C3)
   Utilities: Baltimore County Key Map (5-SE)
   Baltimore County Design Drawings as noted
   Zoning: Baltimore County 200 Scale Zoning Map (2000) (NW-14A)
   Floodplain: Per the Flood Insurance Rate Map Panel#240010-0235-B March 2, 1981.
   There is no Floodplain on site
6. GENERAL DATA:
   Election District: 8 Watershed: 11
   Census Tract: 4085.05 Subsewershed: 23
   Councilmanic District: 3
7. SITE INFORMATION:
   A. Acreage: 1.82 Acres (net)
   1.94 Acres (gross. 30' R/W @ 253.63'± 0.17 AC±)
   B. Existing Zoning: BL
   C. Density Calculations:
   FAR Allowed: 3.0 or 260,058 SF
   FAR Existing: 0.08 or 7,394 SF (including existing storage shed)
   (per permit site plan dated 5/16/01)
   D. Parking:
   Required: 16 spaces/1000 SF
   16/1000 x 7,394= 119 spaces
   Existing: 97 spaces
8. UTILITIES: Public water and sewer are provided.
9. USE: The existing use is restaurant.

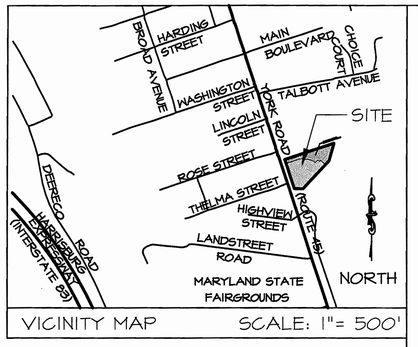

VICINITY MAP SCALE: 1"= 500'

EXHIBIT 'A'
SITE PLAN

2323 YORK ROAD

0 15 30 60 90
SCALE: 1"=30'

NORTH

PROJECT NAME: 2323 YORK ROAD
EXHIBIT 'A'
PLAN TITLE: SITE PLAN

COUNCILMANIC DIST.: 3
ELECTION DIST.: 8

APPROVAL:

REVISIONS:

EXHIBIT 'A'
Petitioner's
1-A

D. S. THALER & ASSOC., INC.
CIVIL ENGINEERS SURVEYORS
LANDSCAPE ARCHITECTS LAND PLANNERS
7115 AMBASSADOR ROAD
P.O. BOX 47428
BALTIMORE, MARYLAND 21244-7428
(410) 944-ENGR, (410) 944-3647

DATE: AUGUST 1, 2001
SCALE: 1"= 30'
C.I.: 2'
PROJ. NO.: 02364A
SHEET 1 OF 1

LEGEND

EXISTING

- TRACT BOUNDARY
- OTHER PROPERTY LINE
- ZONING BOUNDARY
- EASEMENT
- CONTOUR
- TREE LINE
- ROAD/DRIVE
- CURB
- SAN — SANITARY SEWER
- STM — STORM DRAIN
- W — WATER LINE
- LIGHT POLE
- UTILITY POLE

R:\2323 York Road\Planning\Dwgs\Exhibits\siteplan-DEPRM.dwg Tue Aug 14 14:43:17 2001 DRB

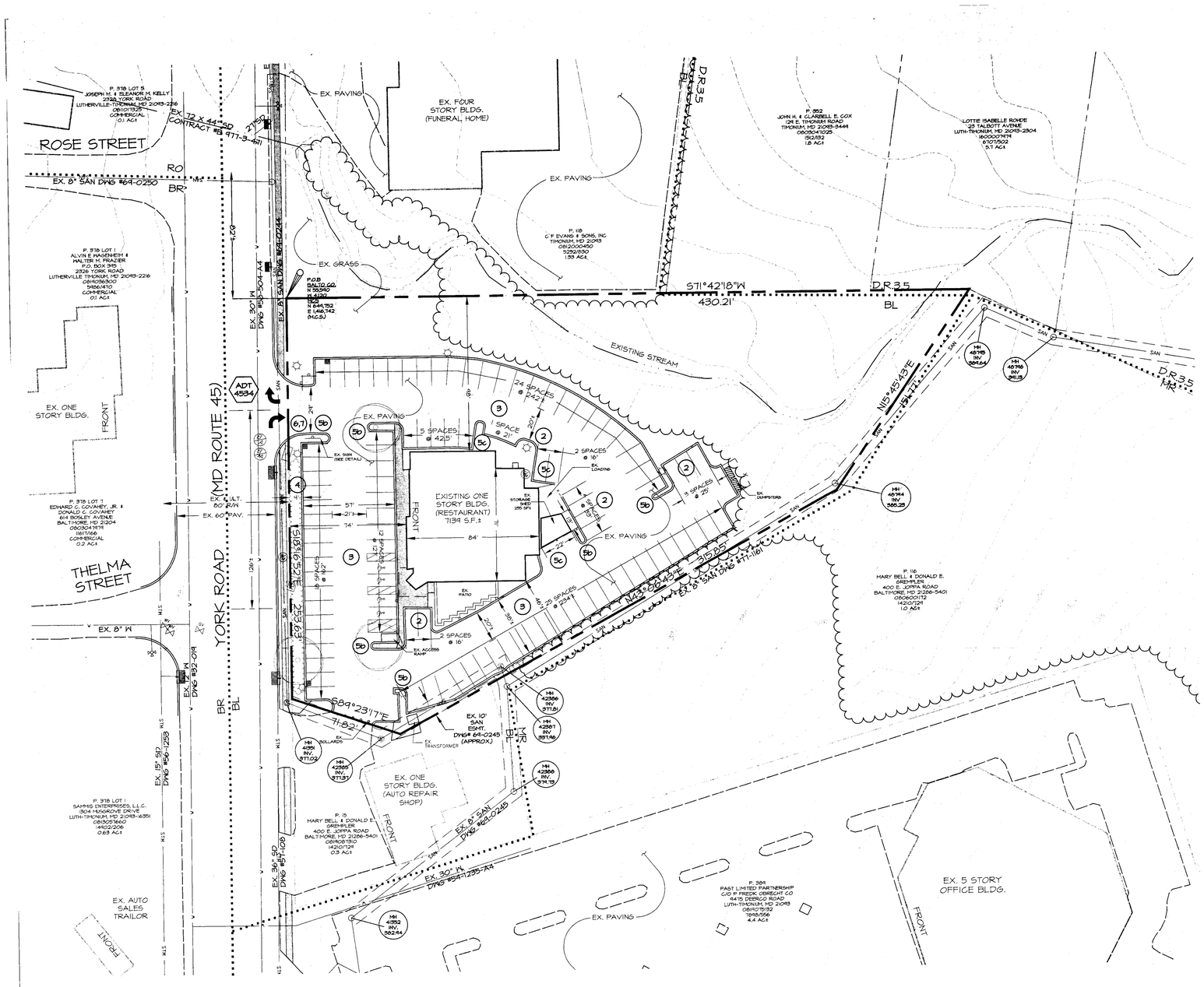

GENERAL NOTES:

1. DEVELOPMENT NAME: 2323 York Road

2. APPLICANT: An Poitin Stil
1400 E. Northern Parkway
Baltimore, MD 21213
410.323.3400
ATTN: John J. Mitcherling

3. OWNER: Albert P. & Freida G. Schaefer
c/o. HMS Dept. #406
10400 Fernwood Road
Bethesda, Md 20817-1109

4. PLAN PREPARED BY: D.S. Thaler & Associates, Inc.
7115 Ambassador Road
P.O. Box 47428
Baltimore, Maryland 21244-7428
(410) 944-3647
ATTN: Alan E. Scoll, R.L.A.

5. PROPERTY REFERENCES:

Parcel	Tax Map	Grid	Tax Account No.	Deed	ADC-Map
117	51	23	0818009100	3546/154	18-K10

Boundary: D.S. Thaler & Associates, Inc. (April 2001)
Topography: Baltimore County 915 (51-C3)
Utilities: Baltimore County Key Map (51-5E)
Baltimore County Design Drawings as noted
Zoning: Baltimore County 200 Scale Zoning Map (2000) (NW-14A)
Floodplain: Per the Flood Insurance Rate Map Panel#240010-0235-B March 2, 1981:
There is no Floodplain on site

6. GENERAL DATA:
Election District: 8 Watershed: 11
Census Tract: 4085.05 Subwatershed: 23
Councilmanic District: 3

7. SITE INFORMATION:
A. Acreage: 1.82 Acrest (net)
1.94 Acrest (gross: 30' R/W = 253.63'± 0.17 AC±)

B. Existing Zoning: BL

C. Density Calculations:
FAR Allowed: 3.0 or 2603,053 SF
FAR Existing: 0.08 or 7,394 SF (including existing storage shed)
(per permit site plan dated 5/16/01)

(1) D. Parking:
Required: 16 spaces/1000 SF
16/1000 x 7,394= 119 spaces
Existing: 97 spaces

8. UTILITIES: Public water and sewer are provided.

9. USE: The existing use is restaurant.

10. EXISTING: There are no known critical areas, archaeological sites, endangered species, or hazardous materials* on the site.
There are no zoning case numbers on file.
This site does not lie within the limits of the Chesapeake Bay Critical Area.

*As known to the applicant; location and description of hazardous materials as defined by section 7-101 of the environmental article of the annotated code of Maryland, as from time to time amended.

11. ROADS: All interior roads are private

12. AVERAGE DAILY TRIPS (ADTS):
Average daily trips as calculated from the Baltimore County Comprehensive Manual of Development Policy (CMDP)
Average Daily Trips: 768 ADT/1000SF = 4534 ADTS

13. STORAGE TANKS: There are no known underground storage tanks on site.

14. LIGHTING: Existing lighting is indicated on plan.

15. This property as shown on the plan has been held intact since 1958 (according to the deed). No known part of the gross area of this property as shown on the plan has been utilized, recorded or represented as density or area to support any off-site dwellings.

16. Existing sidewalks are provided along York Road.

17. All parking aisles and maneuvering areas are paved with macadam and permanently striped.

18. According to Glen Hage, Office of Planning, MTA, the nearest MTA service to this site is 0.3 miles away (bus stop #8 at York Road and Padonia Road).

19. There are no known Areas of Critical State Concern on-site.

20. There are no known limitations established by the Courts, County Board of Appeals, Planning Board or Zoning Commissioner or restrictive covenants recorded with individual or group which would limit proposed development on site.

21. There is no building, property or site within or contiguous to the proposed development included on the Maryland Historical Trust inventory of Historic Properties, the Baltimore County Preliminary or Final Landmarks List, the National Register of Historic Places, the Maryland Archaeological Survey, or identification of any Baltimore County Historic District, or National Register District covering the proposed development.

22. No additional information is requested by the Department of Environmental Protection and Resource Management to determine compliance with the Critical Area Local Protection Program pursuant to 26-442(a).

23. Site History:
Building Permits: B436354 (12.7.00). 2 story storage building
B872510 (4.15.94). interior alterations
B884694 (8.23.94). patio
B941105 (9.14.94). pergola

DRC #081101D; DIST. 8C3. Development Review Committee granted an A-7 limited exemption per Section 26.171(A)(1) of the Baltimore County Code on June 21, 2001 for a building addition.

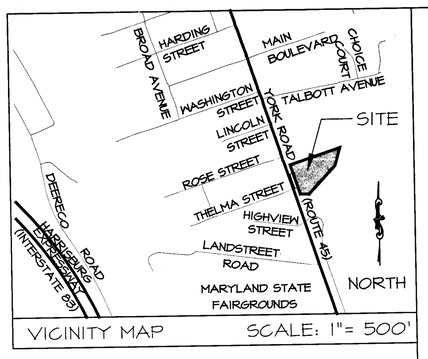

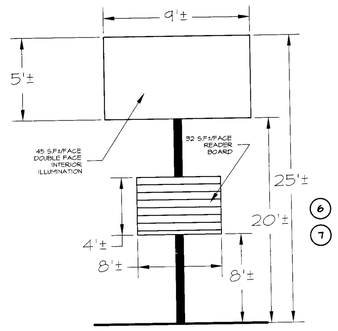

EXISTING FREE STANDING ENTERPRISE SIGN ELEVATION
N.T.S.

PLAT TO ACCOMPANY ZONING PETITION

2323 YORK ROAD

0 15 30 60 90
SCALE: 1"=30'

NORTH

VARIANCE REQUESTS

VARIANCES ARE REFERENCED IN THE PLAN AND DETAILS BY NUMBER AND LETTER OF THE REQUEST IN THE FOLLOWING MANNER: (5a)

1. From Section 409.6.2. of the Baltimore County Zoning Regulations (BCZR) -
   To allow the existing 97 parking spaces in lieu of 119 spaces required.
2. From Section 409.3 (BCZR) -
   To allow standard angled parking spaces eight feet (8') wide in lieu of 8.5 feet required.
3. From Section 409.4.C. (BCZR) -
   To allow parking aisle widths of 20 feet in lieu of 22 feet required.
4. From Section 409.8.A.4. (BCZR) -
   To allow a nine foot (9') setback from parking to a street right-of-way in lieu of 10 feet required.
5. From Section 409.8.A.1. (BCZR) and the Baltimore County Landscape Manual as follows:
   a. Part III. B.2.a.
      To allow three (3) percent of the parking lot to be internal islands in lieu of seven percent (7%) required.
   b. Part III. B.2.c.
      To allow parking islands 2.5 feet wide in lieu of nine feet (9') required.
   c. Part III. B.2.d.
      To allow six inch (6") setback parking-to-building in lieu of six feet (6') required.
6. From Section 450.7.B.1. BCZR -
   To allow a free-standing enterprise sign with a non-contiguous reader-board.
7. From Section 450.7.B.2. BCZR -
   To allow a reader-board of 71.1% (32 SF per face) in lieu of the required 50% (22.5 SF per face) of an erected permitted enterprise sign.
8. And any other variances deemed necessary by the Zoning Commissioner.

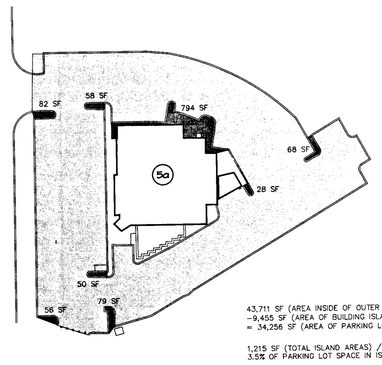

ISLAND AREAS
82 SF
58 SF
794 SF
68 SF
28 SF
79 SF
50 SF
56 SF
1215 SF TOTAL

43,711 SF (AREA INSIDE OF OUTER PARKING LOT CURB)
-9,455 SF (AREA OF BUILDING ISLAND)
= 34,256 SF (AREA OF PARKING LOT)

1,215 SF (TOTAL ISLAND AREAS) / 34,257 SF (AREA PARKING LOT) = .035
3.5% OF PARKING LOT SPACE IN ISLANDS

PARKING ISLAND STUDY
1" = 50'

LEGEND

EXISTING

- TRACT BOUNDARY
- OTHER PROPERTY LINE
- ZONING BOUNDARY
- EASEMENT
- CONTOUR
- TREE LINE
- ROAD/DRIVE
- CURB
- SAN — SANITARY SEWER
- STM — STORM DRAIN
- W — WATER LINE
- LIGHT POLE
- UTILITY POLE

PROJECT NAME: 2323 YORK ROAD	REVISIONS:
PLAN TITLE: PLAT TO ACCOMPANY ZONING PETITION	
COUNCILMANIC DIST.: 3	
ELECTION DIST.: 8	
APPROVAL:	

D.S. THALER & ASSOC., INC.
CIVIL ENGINEERS
LANDSCAPE ARCHITECTS
SURVEYORS
LAND PLANNERS
7115 AMBASSADOR ROAD
P.O. BOX 47428
BALTIMORE, MARYLAND 21244-7428
(410) 944-ENGR, (410) 944-3647

STATE OF MARYLAND — ALAN E. SCOLL — NO. 781 — REGISTERED LANDSCAPE ARCHITECT

DATE: 11-21-01
SCALE: 1"= 30'
C.I.: 2'
PROJ. NO.: 02369A
SHEET 1 OF 1

02-165-A