6/14/03

IN RE: PETITIONS FOR SPECIAL HEARING AND SPECIAL EXCEPTION – W/S Honeygo Boulevard, 1010' NE of the c/l Joppa Road **(9380 Honeygo Blvd./5022 E. Joppa Road)** 11th Election District 5th Council District	* * * *	BEFORE THE ZONING COMMISSIONER OF BALTIMORE COUNTY Case No. 03-454-SPHX

RITA, L.P., Owners; Omnipoint Communications
CAP Operations, LLC, Lessees - Petitioners

* * * * * * * * * * *

FINDINGS OF FACT AND CONCLUSIONS OF LAW

This matter comes before the Zoning Commissioner for consideration of Petitions for Special Hearing and Special Exception filed by the owners of the subject property, RITA, L.P., and the Contract Lessees, Omnipoint Communications CAP Operations, LLC, through their attorney, Karl J. Nelson, Esquire. The Petitioners request a special hearing for a determination that Section 426.9.C.2 of the Baltimore County Zoning Regulations (B.C.Z.R.) does not require the creation of a three-acre special exception area within the subject property for the proposed wireless telecommunications tower. In addition, special exception relief is requested to approve the installation on the subject property of a 100-foot high stealth design wireless telecommunications tower and related electronic equipment. The subject property and requested relief are more particularly described on the four-page site plan submitted which was accepted into evidence and marked as Petitioner's Exhibits 3A through 3D.

Appearing at the requisite public hearing in support of the request were Hillorie Morrison and Ryan Conaway on behalf of Omnipoint Communications CAP Operations, LLC, Contract Lessees, Oakleigh Thorne, and Karl Nelson, Esquire, attorney for the Petitioners. Appearing as interested citizens were Dennis Eckard and William Libercci, representatives of the Perry Hall Improvement Association, and Edward Arnold and Ted Grochowina, nearby residents. There were no Protestants or other interested persons present.

ORDER RECEIVED FOR FILING
Date 6/14/03
By

The subject property under consideration is an irregular shaped parcel located on the west side of Honeygo Boulevard, just north of Joppa Road in Perry Hall. The property is actually part of a larger tract that is bisected by Honeygo Boulevard and contains approximately 54 acres in area, split zoned D.R.10.5H, D.R.3.5H, D.R.1H and B.L.H. The proposal under consideration relates to the western parcel, which contains approximately 10.5 acres in area and is presently unimproved. The western parcel contains a storm water management reservation area, a forest conservation easement and forest buffer easement, and areas of open space. The eastern parcel is proposed for development with a commercial center and residential uses.

As more particularly shown on the plan, Omnipotent Communications CAP Operations, LLC has contracted to lease a small area within the western parcel for the purpose of constructing a 100-foot tall stealth wireless communication tower. Additionally, several small buildings will be constructed at the base of the tower to provide electronic equipment and related infrastructure.

The proposed construction is consistent with the trend in recent years to construct wireless communication towers throughout the Baltimore Metropolitan area. The wireless communications industry has greatly expanded over the years and companies such as the subject Lessee, are frequently searching for new sites to expand and improve their respective network. Construction of wireless communication facilities is governed by Section 426 of the B.C.Z.R. Those regulations established a wireless Tower Communication Committee which reviews all applications for tower construction in Baltimore County. Additionally, Section 426.5 of the B.C.Z.R. provides that the construction of towers is permitted only by special exception in the D.R. zones.

Testimony and evidence presented by the Petitioners fully described the proposed operation and the process undertaken by them to select the subject site. Specifically, it was indicated that there is a "hole" in telephone coverage in this area. The Petitioners searched the area to determine if any existing structures were available which could house the necessary antennae to provide better coverage. Ultimately, it was determined that there were no existing structures

ORDER RECEIVED FOR FILING
DATE 4/19/03
BY

available and upon a thorough investigation the subject site was identified. The property is located centrally between Belair Road and I-95. Obviously, these are major traffic corridors in the vicinity and the location is appropriate from a coverage standpoint. Moreover, it was noted that the subject property will remain undeveloped and thus, the tower will not be located immediately adjacent to existing residences or businesses.

Testimony and evidence was also offered regarding the tower itself. The structure has been identified as a "stealth" tower, which features an internal antenna to reduce visibility. Moreover, the tower is of minimal circumference. Finally, the tower will be constructed at a height no greater than 100 feet.

The Petitioners indicated that a balloon test was conducted in the field to determine visibility of the tower from a variety of off-site locations. A series of photographs were submitted into evidence showing the results of that test. The photographs show not only the balloon that was flown on site, but also computer-enhanced photographs were presented that superimpose the profile of the tower.

Based upon the testimony and evidence offered, I am easily persuaded that the Petition for Special Exception should be granted. It is clear that the Petitioners have made substantial efforts to comply with the spirit, intent and legislative purpose as set out in Section 426 of the B.C.Z.R. Moreover, the Petitioners have satisfied the requirements of Section 502.1 of the B.C.Z.R. for relief to be granted. In sum, I am persuaded that the testimony and evidence support a finding that the proposed use will not be detrimental to the health, safety and general welfare of the locale. It appears that this tower will have minimal impact and the Petitioners have made reasonable efforts to appropriately locate the tower and reduce visibility and impacts on the surrounding locale.

The second question presented in this case is under the Petitioner for Special Hearing. Section 426.9.C.2 provides that a tower, "...shall be located on a lot of at least three acres." The question presented is if the area of the special exception similarly need be at least three acres. A written comment was received from the Zoning Review Division of the Department of Permits and

ORDER RECEIVED FOR FILING
Date 4/19/03
By

Development Management, which states in part, "It has not been demonstrated to this office how the integrity of the required 3-acre area can be maintained without having special exception status overall." It is obvious that the purpose of the 3-acre minimum area is to encourage that towers be located on large tracts so as to minimize impacts to adjacent parcels. That is, if the tower was located on a small property, it would obviously be closer to adjacent property lines and thus, the impact would be greater. This legislative goal is further demonstrated by the setback requirements set out in Section 426, which require that the tower be located a significant distance from common property lines. However, it is equally clear that the actual area of property that a tower will occupy is quite small. The proposed tower is a vertical structure and the space needed for it and related electronic equipment at the base is minimal.

Section 102.2 of the B.C.Z.R. provides that no yard space or minimum area required for a building or use shall be considered as any part of the yard space or minimum area for another building or use. A strict application of this Section would require that none of the 3-acre area designated for a wireless communication tower could be utilized for any other use or purpose. This is clearly not the legislative intent of the 3-acre minimum. That is, it is clear that the Council in enacting this legislation did not wish to encumber property so as to prevent any uses within the 3 acres designated for the tower. For example, parking lots, farm operations, and other uses and activities are frequently shown near the base of a tower. In my judgment, the Council intended that a tower be constructed on a lot of record which is a minimum 3 acres in area. The subject parcel more than meets this requirement. It is equally clear that the entire 3-acre area need not be associated with the tower use. Such a requirement would be inconsistent with the legislative purposes of Section 426 and unduly burdensome. Thus, the Petitioners' plan should be amended so that the area of the special exception is restricted only to the site of the tower and the immediate area adjacent to the base thereof which contains the related sheds and electronic equipment.

Pursuant to the advertisement, posting of the property, and public hearing on these Petitions held, and for the reasons set forth herein, the relief requested shall be granted.

ORDER RECEIVED FOR FILING
Date 6/19/03
By

THEREFORE, IT IS ORDERED by the Zoning Commissioner for Baltimore County this 19th day of June 2003 that Section 426.9.C.2 of the Baltimore County Zoning Regulations (B.C.Z.R.) does not require the creation of a three-acre special exception area within the subject property for the proposed wireless telecommunications tower, and as such, the Petition for Special Hearing be and is hereby GRANTED; and,

IT IS FURTHER ORDERED that the Petition for Special Exception to approve the construction of a 100-foot high stealth design wireless telecommunications tower and related electronic equipment on the subject property, in accordance with Petitioner's Exhibits 3A through 3D, be and is hereby GRANTED, subject to the following restriction:

1) The Petitioners may apply for their building permit and be granted same upon receipt of this Order; however, Petitioners are hereby made aware that proceeding at this time is at their own risk until the 30-day appeal period from the date of this Order has expired. If an appeal is filed and this Order is reversed, the relief granted herein shall be rescinded.

2) The height of the proposed tower shall not exceed 100 feet. Moreover, the tower shall comply with all requirements set out in Section 426 of the B.C.Z.R.

3) When applying for any permits, the site plan filed must reference this case and set forth and address the restrictions of this Order.

LAWRENCE E. SCHMIDT
Zoning Commissioner
for Baltimore County

LES:bjs

ORDER RECEIVED FOR FILING
Date 6/19/03
By

1/5/04

PETITION OF **RITA, L.P.** FOR JUDICIAL REVIEW OF THE DECISION OF THE COUNTY BOARD OF APPEALS OF BALTIMORE COUNTY	*	IN THE
	*	
	*	CIRCUIT COURT
IN THE CASE OF **RITA, L.P.** LEGAL OWNER/PETITION FOR SPECIAL HEARING AND EXCEPTION FOR PROPERTY LOCATED AT W/S HONEYGO BLVD, 1010' NE C/L JOPPA RD (9380 Honeygo Boulevard & 5022 E Joppa Road)	* * *	FOR
11th Election District, 5th Councilmanic District	*	BALTIMORE COUNTY
Case No. 03-454-SPHX Before the County Board of Appeals	*	Case No. 03-C-03-13262

* * * * * * * * * * * * * *

RESPONSE TO PETITION FOR JUDICIAL REVIEW

PEOPLE'S COUNSEL FOR BALTIMORE COUNTY, in accordance with Maryland Rule 7-204, submit this Response to the Petition for Judicial Review filed by RITA, LP and state that we intend to participate in this action for Judicial Review. The undersigned participated in the proceeding before the County Board of Appeals.

/S/

PETER MAX ZIMMERMAN
People's Counsel for Baltimore County

RECEIVED
JAN - 5 2004
BALTIMORE COUNTY
BOARD OF APPEALS

/S/

CAROLE S. DEMILIO
Deputy People's Counsel
Old Courthouse, Room 47
400 Washington Avenue
Towson, MD 21204
(410) 887-2188

CERTIFICATE OF SERVICE

I HEREBY CERTIFY that on this 5th day of January, 2004, a copy of the foregoing Response to Petition for Judicial Review was mailed to:

Patricia A. Malone, Esquire
Venable, LLP
210 Allegheny Avenue
P.O. Box 5517
Towson, Maryland 21285-5517
Attorney for Rita, LP

Karl J Nelson, Esquire
Saul Ewing, LLP
100 S Charles Street
Baltimore, MD 21202
Attorney for Omnipoint Communications

Kathleen Bianco, Administrator
County Board of Appeals for Baltimore County
Old Courthouse,
400 Washington Avenue, Rm 49
Towson, MD 21204

/S/
CAROLE S DEMILIO
Deputy People's Counsel for Baltimore County

12/10/03

IN THE CIRCUIT COURT FOR BALTIMORE COUNTY	*	
	*	
PETITION OF: RITA, LP – Legal Owner 4750 Owings Mills Blvd Owings Mills, MD 21117	* * *	
FOR JUDICIAL REVIEW OF THE OPINION OF THE COUNTY BOARD OF APPEALS OF BALTIMORE COUNTY OLD COURTHOUSE, ROOM 49 400 WASHINGTON AVENUE TOWSON, MARYLAND 21204	* * *	CIVIL ACTION No. **3-C-03-13262**
	*	
IN THE MATTER OF **RITA, LP, Legal Owner, et al** **9380 Honeygo Boulevard** **(aka 5022 E. Joppa Road)**	* * *	
11th ELECTION DISTRICT 5th COUNCILMANIC DISTRICT	* *	
CASE NO.: 03-454-SPHX		

* * * * * * * * * * * *

RECEIVED AND FILED
2003 DEC 16 P 1:42
CLERK OF THE CIRCUIT COURT
BALTIMORE COUNTY

CERTIFICATE OF NOTICE

Madam Clerk:

Pursuant to the Provisions of Rule 7-202(d) of the *Maryland Rules*, the County Board of Appeals of Baltimore County has given notice by mail of the filing of the Petition for Judicial Review to the representative of every party to the proceeding before it; namely:

Patricia A. Malone, Esquire
Venable, Baetjer & Howard, LLP, 210 Allegheny Avenue,
Towson, Md 21204

Lawrence M Macks
Rita LP, 4750 Owings Mills Boulevard, Owings Mills Md 21117

Scott Rouk
Rita LP, 4750 Owings Mills Boulevard, Owings Mills Md 21117

Karl J Nelson Esquire
Saul Ewing & Associates, 100 South Charles Street, Baltimore Md 21201

Hillorie Morrison and Ryan Conaway
Omnipoint Communications, Cap Operations LLC, 12050 Baltimore Avenue, Beltsville, Md 20705

Dennis Eckard
39 Bangert Avenue, Perry Hall Md 21128

William Libercci
19 Shawn Court, Baltimore, Md 21236

David Marks, President
Perry Hall Improvement Association Inc., PO Box 63, Perry Hall Md 21128

Peter Max Zimmerman
People's Counsel for Baltimore County, Old Courthouse, Room 47, 400 Washington Avenue, Towson, Maryland 21204

Carole S. Demilio
Deputy People's Counsel for Baltimore County, Old Courthouse, Room 47, 400 Washington Avenue, Towson, Maryland 21204

A copy of said Notice is attached hereto and prayed that it may be made a part hereof.

Theresa R. Shelton

Theresa R. Shelton, Legal Secretary
County Board of Appeals, Room 49
Old Courthouse, 400 Washington Avenue
Towson, MD 21204 (410-887-3180)

I HEREBY CERTIFY that a copy of the foregoing Certificate of Notice has been mailed to Patricia A. Malone, Esquire, Venable, Baetjer & Howard, LLP, 210 Allegheny Avenue, Towson, Md 21204; Lawrence M Macks, Rita LP, 4750 Owings Mills Boulevard, Owings Mills Md 21117; Scott Rouk, Rita LP, 4750 Owings Mills Boulevard, Owings Mills Md 21117; Karl J Nelson Esquire, Saul Ewing & Associates, 100 South Charles Street, Baltimore Md 21201;

Hillorie Morrison and Ryan Conaway, Omnipoint Communications, Cap Operations LLC, 12050 Baltimore Avenue, Beltsville, Md 20705; Dennis Eckard, 39 Bangert Avenue, Perry Hall Md 21128; William Libercci, 19 Shawn Court, Baltimore, Md 21236; David Marks, President, Perry Hall Improvement Association Inc., PO Box 63, Perry Hall Md 21128; Peter Max Zimmerman, People's Counsel for Baltimore County, Old Courthouse, Room 47, 400 Washington Avenue, Towson, Maryland 21204; Carole S. Demilio, Deputy People's Counsel for Baltimore County, Old Courthouse, Room 47, 400 Washington Avenue, Towson, Maryland 21204, this 16th day of December, 2003.

Theresa R. Shelton

Theresa R. Shelton, Legal Secretary
County Board of Appeals, Room 49
Old Courthouse, 400 Washington Avenue
Towson, MD 21204 (410-887-3180)

County Board of Appeals of Baltimore County

OLD COURTHOUSE, ROOM 49
400 WASHINGTON AVENUE
TOWSON, MARYLAND 21204
410-887-3180
FAX: 410-887-3182

December 16, 2003

PATRICIA A. MALONE, ESQUIRE
VENABLE, BAETJER & HOWARD, LLP
210 ALLEGHENY AVENUE
TOWSON, MD 21204

RE: Circuit Court Civil Action No. 3-C-03-13262
Petition for Judicial Review
RITA, LP
9380 Honeygo Blvd (AKA 5022 E. Joppa Rd)
Case No.: 03-454-SPHX

Dear Ms. Malone:

In accordance with the Maryland Rules, the County Board of Appeals is required to submit the record of proceedings of the Petition for Judicial Review which you have taken to the Circuit Court for Baltimore County in the above-entitled matter within sixty days.

The cost of the transcript of the record must be paid by you. In addition, all costs incurred for certified copies of other documents necessary for the completion of the record must also be at your expense.

The cost of the transcript, plus any other documents, must be paid in time to transmit the same to the Circuit Court within sixty days, in accordance with the Maryland Rules.

Enclosed is a copy of the Certificate of Notice.

Very truly yours,

Theresa R. Shelton

Theresa R. Shelton
Legal Secretary

/trs
Enclosure
c: Lawrence M Macks, RITA, LP
Scott Rouk, RITA, LP
Karl J. Nelson, Esquire
Omnipoint Communications, Cap Operations LLC,
People's Counsel for Baltimore County

Printed with Soybean Ink
on Recycled Paper

County Board of Appeals of Baltimore County

OLD COURTHOUSE, ROOM 49
400 WASHINGTON AVENUE
TOWSON, MARYLAND 21204
410-887-3180
FAX: 410-887-3182

December 16, 2003

Peter Max Zimmerman
Carole S. Demilio
Office of People's Counsel
Old Courthouse, Room 47
400 Washington Avenue
Towson, MD 21204

RE: Circuit Court Civil Action No. 3-C-03-13262
Petition for Judicial Review
RITA, LP
9380 Honeygo Blvd (AKA 5022 E. Joppa Rd)
Case No.: 03-454-SPHX

Dear Mr. Zimmerman and Ms. DeMilio:

Notice is hereby given, in accordance with the Maryland Rules, that a Petition for Judicial Review was filed on December 8, 2003, in the Circuit Court for Baltimore County from the decision of the County Board of Appeals rendered in the above matter. Any party wishing to oppose the petition must file a response within 30 days after the date of this letter, pursuant to the Maryland Rules.

Please note that any documents filed in this matter, including, but not limited to, any other Petition for Judicial Review, must be filed under Civil Action No. **3-C-03-13262.**

Enclosed is a copy of the Certificate of Notice.

Very truly yours,

Theresa R. Shelton

Theresa R. Shelton
Legal Secretary

/trs
Enclosure

c: Patricia A. Malone, Esquire
Lawrence M Macks, RITA, LP
Scott Rouk, RITA, LP
Karl J. Nelson, Esquire
Hillorie Morrison and Ryan Conaway
Omnipoint Communications, Cap Operations LLC,
David Marks, President
Perry Hall Improvement Association Inc.,
William Libercci
Oakleigh Thorne
Jeremiah T. Murnane, Jr.
Dennis Eckard
Edward Arnold
Pat Keller, Director/Planning
Lawrence E. Schmidt, Zoning Commissioner
Timothy Kotroco, Director/PDM

Printed with Soybean Ink
on Recycled Paper

12/15/03

PETITION OF RITA, LP, 4750 Owings Mills Boulevard Baltimore, Maryland 21117	*	IN THE CIRCUIT COURT
	*	FOR
FOR JUDICIAL REVIEW OF THE DECISION OF THE COUNTY BOARD OF APPEALS OF BALTIMORE COUNTY Old Courthouse, Room 49 400 Washington Avenue Towson, Maryland 21204	*	BALTIMORE COUNTY
	*	
	*	Civil Action No. 03-C-03-13262
	*	
IN THE MATTER OF THE APPLICATION OF RITA, LP, LEGAL OWNER, et al., FOR PETITION FOR SPECIAL HEARING AND SPECIAL EXCEPTION FOR PROPERTY LOCATED AT 9380 Honeygo Boulevard & 5022 E. Joppa Road W/S Honeygo Boulevard, 1010' NE C/L Joppa Road	*	
11th Election District 5th Councilmanic District	*	
	*	
CBA No. 03-454-SPHX	*	

RECEIVED
DEC 15 2003
BALTIMORE COUNTY
BOARD OF APPEALS

* * * * * * *

PETITION FOR JUDICIAL REVIEW

RITA, LP, legal owner, by Patricia A. Malone with Venable LLP, its attorney, in accordance with Maryland Rules 7-202, files this Petition for Judicial Review and requests judicial review of the County Board of Appeals of Baltimore County's decision, dated November 7, 2003, with respect to the Petition for Special Exception

and Petition for Special Hearing in Case No. 03-454-SPHX. RITA, LP was a party to the proceedings before the County Board of Appeals.

Respectfully submitted,

PATRICIA A. MALONE
Venable LLP
210 Allegheny Avenue
P.O. Box 5517
Towson, Maryland 21285-5517
(410) 494-6200
Attorneys for Appellant RITA, LP

CERTIFICATE OF SERVICE

I HEREBY CERTIFY that on this 8th day of December, 2003, a copy of the foregoing PETITION FOR JUDICIAL REVIEW was mailed to Karl J. Nelson, Esquire, Saul Ewing LLP, 100 S. Charles Street, Baltimore, Maryland 21202, Attorney for Omnipoint Communications CAP Oeperations, LLC; Carole S. Demilio, Esquire, Deputy People's Counsel for Baltimore County, Room 47, Old Courthouse, 400 Washington Avenue, Towson, Maryland 21204; and to Kathleen C. Bianco, Administrator, County Board of Appeals of Baltimore County, Old Courthouse, Room 49, 400 Washington Avenue, Towson, Maryland 21204.

PATRICIA A. MALONE

TO1DOCS1/174153 v1

11/1/03

IN RE: PETITION FOR SPECIAL HEARING AND SPECIAL EXCEPTION	*	BEFORE THE
9380 Honeygo Blvd & 5022 E. Joppa Road W/side Honeygo Blvd; 1010 NE c/line Joppa	*	COUNTY BOARD OF APPEALS
11th Election & 5th Councilmanic Districts Legal Owner(s) : RITA, LP; Lawrence M.	*	OF
Maces, Partner	*	BALTIMORE COUNTY
	*	Case No. 03-454-SPHX

DECISION AND ORDER

This case came before the Board of Appeals on October 28, 2003 as an appeal of the Petitions for Special Hearing and Special Exception granted by the Zoning Commission (with restrictions) on June 19, 2003. The appeal was filed by the Office of People's Counsel, which was represented at the October 28 hearing by Carole Demilio, Esquire. Petitioner Omnipoint Communications CAP Operations, LLC ("Omnipoint") was represented by Karl J. Nelson, Esquire. Also present as interested parties were William Libercci and Dennis Eckard who appeared on behalf of the Perry Hall Improvement Association. At the outset of the October 28 hearing, above-referenced counsel informed the Board that the appeal had been settled, subject to the Board's review and approval. Counsel then proffered the terms of the settlement for the record. As explained below, the Board hereby accepts those proffers and resolves the appeal as set forth below.

THE NATURE OF THE APPEAL

This case commenced when Petitioner filed two petitions for consideration by the Zoning Commissioner. The first petition sought special exception approval for a 100' wireless telecommunications structure to be located at 9380 Honeygo Boulevard/5022 E. Joppa Road on property owned by RITA, LP. The property where the tower will be located is just over 10 acres in size and is currently undeveloped. It serves as a storm water management area for an

adjacent property currently being developed by RITA, LP as a mixed commercial/retail center.

Petitioner's original special exception plan showed a 3 acre special exception area on the subject parcel to comply with the County's interpretation of Baltimore County Zoning Regulations ("B.C.Z.R.") § 426.9.C.2.

In addition to seeking special exception approval, Petitioner Omnipoint filed a separate petition for special hearing seeking the Zoning Commissioner's interpretation of B.C.Z.R. § 426.9.C.2. Specifically, Petitioner Omnipoint asserted that Section 426.9.C.2. does not require a 3 acre special exception area to be designated on a site plan when the subject parcel is, itself, more than 3 acres in size. Because Petitioners had shown the 3 area on the original site plan presented to the Zoning Commissioner and designated that area as the "special exception area," the outcome of the special exception case was not dependent upon the outcome of the special hearing case.

On June 19, 2003, the Zoning Commissioner granted both the petition for special exception and the petition for special hearing. The office of People's Counsel timely appealed the Zoning Commissioner's ruling.

As noted above, all parties appeared before the Board on October 28, 2003 to apprise the Board of their proposed settlement. By proffer, counsel for the parties stated as follows:

- Petitioner agreed to withdraw its special hearing request relating to the 3 acre requirement created by B.C.Z.R. § 426.9.C.2;
- The parties agreed that Petitioner withdrew its special hearing petition without prejudice to any parties' position as to the correct interpretation of B.C.Z.R § 426.9.C.2;
- Petitioner amended its special exception request to specifically designate a 3 acre area as the "special exception area" for purposes of § 426.9.C.2;
- Petitioner further noted that the proposed special exception area contains no other uses or buildings;

- Petitioner submitted its Exhibit 1, an amended site plan documenting the changes described above;

- Petitioner then requested that the special exception be granted and governed by the site plan submitted as Petitioner's Exhibit 1.

- In light of Petitioner's stipulations, the Office of People's Counsel withdrew its appeal of the special exception, both parties agreeing the special exception is governed by the amended site plan submitted as Petitioner's Exhibit 1;

- Both parties also agreed, at the request of the Perry Hall Improvement Association, that the Board should include with its Order a condition stating that any antennas located on the stealth pole depicted on Petitioners' Exhibit 1 should be located inside of that pole.

Because the appeal is resolved through the withdrawals and amendments detailed above, this Board does not need to make detailed factual findings relating to the special exception request. Rather, having heard counsels' proffers, reviewed the pertinent file information, petitions, and site plans, the Board finds that the proposed settlement, embodied by the stipulation set forth above, should be approved. Therefore, the Board disposes of the pending appeal in Case No. 03-454-SPHX as follows:

- Petitioner's request for special hearing to obtain an interpretation of BCZR § 426.9.C.2 is withdrawn without prejudice;

- The proposed amendments to Petitioner's special exception request are approved;

- The amendments to the proposed special exception are depicted on Petitioner's Exhibit 1;

- The appeal filed by the office of People's Counsel is withdrawn; and

- As a further condition of this approval, any antennas to be located on the telecommunications facility that is the subject of this approval should be mounted inside of the 100' monopole.

ORDER

THEREFORE, IT IS THIS 7th day of November, 2003 y the County Board of Appeals of Baltimore County

ORDERED that Petitioner's request for special hearing to obtain an interpretation of BCZR § 426.9.C.2 is withdrawn without prejudice; and it is further

ORDERED that the proposed amendments to Petitioner's special exception request are approved; and that the amendments to the proposed special exception are depicted on Petitioner's Exhibit 1; and it is further

ORDERED that the appeal filed by the office of People's Counsel is withdrawn; and it is further

ORDERED, that as a further condition of this approval, any antennas to be located on the telecommunications facility that is the subject of this approval should be mounted inside of the 100' monopole.

COUNTY BOARD OF APPEALS
OF BALTIMORE COUNTY

Lawrence S. Wescott

Charles L. Marks

County Board of Appeals of Baltimore County
OLD COURTHOUSE, ROOM 49
400 WASHINGTON AVENUE
TOWSON, MARYLAND 21204
410-887-3180
FAX: 410-887-3182

November 7, 2003

Carole S. Demilio
Deputy People's Counsel
for Baltimore County
Room 47, Old Courthouse
400 Washington Avenue
Towson, MD 21204

RE: *In the Matter of: RITA LP; Omnipoint Communications CAP Operations LLP* /Case No. 03-454-SPHX

Dear Ms. Demilio:

Enclosed please find a copy of the final Opinion and Order issued this date by the County Board of Appeals of Baltimore County in the subject matter.

Any petition for judicial review from this decision must be made in accordance with Rule 7-201 through Rule 7-210 of the *Maryland Rules of Procedure*, **with a photocopy provided to this office concurrent with filing in Circuit Court. Please note that all Petitions for Judicial Review filed from this decision should be noted under the same civil action number.** If no such petition is filed within 30 days from the date of the enclosed Order, the subject file will be closed.

Very truly yours,

Kathleen C. Bianco /trs

Kathleen C. Bianco
Administrator

Enclosure

c: Karl J. Nelson, Esquire
Lawrence M. Macks /RITA LP
Scott Rouk /RITA LP
Hillorie Morrison /Ryan Conaway
Omnipoint Communications CAP Operations, LLC
Oakleigh Thorne
David Marks, President
Perry Hall Improvement Association, Inc.
Jeremiah T. Murnane, Jr.
Dennis Eckard
William Libercci
Edward Arnold
Pat Keller, Director /Planning
Lawrence E. Schmidt, Zoning Commissioner
Timothy M. Kotroco, Director /PDM

Printed with Soybean Ink
on Recycled Paper

Baltimore County
Zoning Commissioner

Suite 405, County Courts Bldg.
401 Bosley Avenue
Towson, Maryland 21204
410-887-4386
Fax: 410-887-3468

June 19, 2003

Karl J. Nelson, Esquire
Saul Ewing & Associates
100 S. Charles Street
Baltimore, Maryland 21201

RE: PETITIONS FOR SPECIAL HEARING & SPECIAL EXCEPTION
W/S Honeygo Boulevard, 1010' NE of the c/l Joppa Road
(9380 Honeygo Boulevard, aka 5022 E. Joppa Road)
11th Election District – 5th Council District
RITA, L.P., Owners; Omnipoint Communications CAP Operations LLC, Lessees - Petitioners
Case No. 03-454-SPHX

Dear Mr. Nelson:

Enclosed please find a copy of the decision rendered in the above-captioned matter. The Petitions for Special Hearing and Special Exception have been granted, in accordance with the attached Order.

In the event any party finds the decision rendered is unfavorable, any party may file an appeal to the County Board of Appeals within thirty (30) days of the date of this Order. For further information on filing an appeal, please contact the Department of Permits and Development Management office at 887-3391.

Very truly yours,

LAWRENCE E. SCHMIDT
Zoning Commissioner
for Baltimore County

LES:bjs

cc: Mr. Lawrence M. Macks, RITA, L.P.
4750 Owings Mills Boulevard, Owings Mills, Md. 21117
Ms. Hillorie Morrison & Mr. Ryan Conaway, Omnipoint Comm. CAP Operations, LLC
12050 Baltimore Avenue, Beltsville, Md. 20705
Mr. Oakleigh Thorne, 10605 Concord Street, Kensington, Md. 20895
Mr. Dennis Eckard, 39 Bangert Avenue, Perry Hall, Md. 21128
Mr. William Libercci, 19 Shawn Court, Baltimore, Md. 21236
Mr. Edward Arnold, 9500 Amberleigh Lane, Perry Hall, Md. 21128
Mr. Ted Grochowina, 9500 Amberleigh Lane, Perry Hall, Md. 21128
People's Counsel; Case File

Printed with Soybean Ink
on Recycled Paper

Petition for Special Hearing

to the Zoning Commissioner of Baltimore County

for the property located at 9380 Honeygo Blvd (aka 5022 E. Joppa Road)

which is presently zoned DR 10.5H/~~BL-H~~ DR3.5H

This Petition shall be filed with the Department of Permits and Development Management. The undersigned, legal owner(s) of the property situate in Baltimore County and which is described in the description and plat attached hereto and made a part hereof, hereby petition for a Special Hearing under Section 500.7 of the Zoning Regulations of Baltimore County, to determine whether or not the Zoning Commissioner should approve

an interpretation that BCZR 426.9.C.2, which requires the wireless telecommunications tower proposed at the property be located on a parcel of at least three acres, does not require the creation of a three acre special exception area within the overall parcel

Property is to be posted and advertised as prescribed by the zoning regulations.
I, or we, agree to pay expenses of above Special Hearing, advertising, posting, etc. and further agree to and are to be bounded by the zoning regulations and restrictions of Baltimore County adopted pursuant to the zoning law for Baltimore County.

I/We do solemnly declare and affirm, under the penalties of perjury, that I/we are the legal owner(s) of the property which is the subject of this Petition.

Contract Purchaser/Lessee:

Hillorie S. Morrison Omnipoint Communication CAP Operations LLC
Name - Type or Print

Signature

12050 Baltimore Avenue 410-332-8663
Address Telephone No.

Beltsville, Maryland 20705
City State Zip Code

Attorney For Petitioner:

Karl J. Nelson
Name - Type or Print

Signature

Saul Ewing & Associates
Company

100 S. Charles St 410-332-8663
Address Telephone No.

Baltimore, Maryland 21201
City State Zip Code

Legal Owner(s):

RITA, L.P.
Name - Type or Print

Lawrence M Macks Partner
Signature

4750 Owings Mills Blvd 410-356-9900
Name - Type or Print

Baltimore, Maryland 21117
Signature

Address Telephone No.

City State Zip Code

Representative to be Contacted:

Scott Rovk
Name

SAME AS ABOVE
Address Telephone No.

City State Zip Code

OFFICE USE ONLY

ESTIMATED LENGTH OF HEARING _____

UNAVAILABLE FOR HEARING _____

Reviewed By LTM Date 4/1/03

Case No. 03-454-XSPH

REV 9/15/98

Petition for Special Exception

to the Zoning Commissioner of Baltimore County

9380 Honeygo Blvd

for the property located (aka 5022 E. Joppa Road) DR 3.5H

which is presently zoned DR 10.5H/~~BL-H~~

This Petition shall be filed with the Department of Permits and Development Management. The undersigned, legal owner(s) of the property situate in Baltimore County and which is described in the description and plat attached hereto and made a part hereof, hereby petition for a Special Exception under the Zoning Regulations of Baltimore County, to use the herein described property for

A 100-foot-high stealth design wireless telecommunications tower and related electronic equipment

Property is to be posted and advertised as prescribed by the zoning regulations.
I, or we, agree to pay expenses of above Special Exception, advertising, posting, etc. and further agree to and are to be bounded by the zoning regulations and restridions of Baltimore County adopted pursuant to the zoning law for Baltimore County.

I/We do solemnly declare and affirm, under the penalties of perjury, that I/we are the legal owner(s) of the property which is the subject of this Petition.

Contract Purchaser/Lessee:

Hillorie S. Morrison
Omnipoint Communications CAP Opera, LLC
Name - Type or Print

Signature

12050 Baltimore Avenue
Address

Beltsville, Maryland 20705
City State Zip Code

Telephone No.
240-264-8600, X8616

Legal Owner(s):

RITA, L.P.
Name - Type or Print

Signature

Lawrence M. Macks Partner
Name - Type or Print

Signature

4750 Owings Mills Bld 410-356-9900
Address Telephone No.

Baltimore, Maryland 21117
City State Zip Code

Attorney For Petitioner:

Karl J. Nelson
Name - Type or Print

Signature

Saul Ewing & Associates
Company

100 S. Charles St. 410-332-8663
Address Telephone No.

Baltimore, Maryland 21201
City State Zip Code

Representative to be Contacted:

Scott Rovk
Name

SAME AS ABOVE
Address Telephone No.

City State Zip Code

Case No. 03-454-XSPH

OFFICE USE ONLY

ESTIMATED LENGTH OF HEARING _____

UNAVAILABLE FOR HEARING _____

Reviewed By CTM Date 4/1/03

REV 09/15/98

MORRIS & RITCHIE ASSOCIATES, INC.

ENGINEERS, ARCHITECTS, PLANNERS, SURVEYORS,
AND LANDSCAPE ARCHITECTS

Zoning Description

Beginning at a point located on the westerly side of Honeygo Boulevard which has a variable width at the distance of 1010 feet northeasterly of the centerline of the nearest intersecting street, Joppa Road which has a variable width. **Thence** the following courses and distances:

South 87 degrees 29 minutes 31 seconds West, 407.64 feet; North 02 degrees 30 minutes 29 seconds West, 176.60 feet; North 44 degrees 10 minutes 00 seconds East, 201.27 feet; North 87 degrees 29 minutes 31 seconds East, 227.39 feet; North 63 degrees 45 minutes 23 seconds East, 119.14 feet; Southwesterly by a non-tangential curve to the right having a radius of 1289.92 feet, an arc length of 32.07 feet, the chord of said arc bearing South 02 degrees 19 minutes 54 seconds West, 32.06; Southwesterly by a compound curve to the right having a radius of 1231.24 feet, an arc length of 339.64 feet, the chord of said arc bearing South 09 degrees 51 minutes 47 seconds West, 338.57 feet to the point and place of beginning and being a portion of Lot 10 as laid out and shown on a plat entitled "Final Plat One Honeygo Village Center" dated September 18, 2001 and recorded among the Land Records of Baltimore County, Maryland in Plat Book S.M. 75, folio 52.

Containing 134,177 square feet or 3.0803 acres of land, more or less, being a portion of #9300 Honeygo Boulevard, and being located in the Eleventh Election District of Baltimore County, Maryland.

STATE OF MARYLAND
MICHAEL LEE PAP
11041
PROFESSIONAL LAND SURVEYOR

3/12/07

#454

110 West Road, Suite 245, Towson, MD 21204 (410) 821-1690 Fax (410) 821-1748

Abingdon, MD (410) 515-9000 ✦ **Annapolis Junction, MD** (410) 792-9792 ✦ **Towson, MD** (410) 821-1690 ✦ **Wilmington, DE** (302) 326-2200

Visit us on the web at www.mragta.com

NOTICE OF ZONING HEARING

The Zoning Commissioner of Baltimore County, by authority of the Zoning Act and Regulations of Baltimore County will hold a public hearing in Towson, Maryland on the property identified herein as follows:

Case: #03-454-XSPH
9380 Honeygo Blvd., 5022 E. Joppa Road
W/side Honeygo Blvd., 1010 N/east of centerline Joppa Road
11th Election District – 5th Councilmanic District
Legal Owner(s): Rita L.P., Lawrence M. Macks, Partner
Contract Purchaser: Hillorie Morrison,
Omnipoint Communication CAP Operations, LLC

Special Hearing: to approve an interpretation that BCZR 426.9.C.2 which requires the wireless telecommunications tower proposed at the property be located on a parcel of at least three acres, does not require the creation of a three acre special exception area within the overall parcel. **Special Exception:** to approve a 100-foot high stealth design wireless telecommunications tower and related electronic equipment.

Hearing: Wednesday, June 4, 2003 at 2:00 p.m. in Room 106, County Office Building, 111 W. Chesapeake Avenue.

LAWRENCE E. SCHMIDT
Zoning Commissioner for Baltimore County

NOTES: (1) Hearings are Handicapped Accessible; for special accommodations Please Contact the Zoning Commissioner's Office at (410) 887-4386.
(2) For information concerning the File and/or Hearing, Contact the Zoning Review Office at (410) 887-3391.

JT 5/756 May 20 C605102

CERTIFICATE OF PUBLICATION

5/23/, 2003

THIS IS TO CERTIFY, that the annexed advertisement was published in the following weekly newspaper published in Baltimore County, Md., once in each of 1 successive weeks, the first publication appearing on 5/20/, 2003.

- [X] The Jeffersonian
- [ ] Arbutus Times
- [ ] Catonsville Times
- [ ] Towson Times
- [ ] Owings Mills Times
- [ ] NE Booster/Reporter
- [ ] North County News

S. Wilkinson

LEGAL ADVERTISING

APPEAL SIGN POSTING REQUEST

CASE NO.: 03-454-XSPH

RITA, L.P. - LEGAL OWNERS

9380 Honeygo Blvd
(AKA 5022 E. Joppa Road)

11th ELECTION DISTRICT APPEALED: 7/3/2003

ATTACHMENT – (Plan to accompany Petition – Petitioner's Exhibit No. 3A)

**********COMPLETE AND RETURN BELOW INFORMATION*****

CERTIFICATE OF POSTING

TO: Baltimore County Board of Appeals
400 Washington Avenue, Room 49
Towson, Maryland 21204

Attention: Kathleen Bianco
Administrator

RE: Case No.: 03-454-SPHX

Petitioner/Developer:

This is to certify that the necessary appeal sign was posted conspicuously on the property located at: 9380 Honeygo Blvd.

The sign was posted on 8/4/03, 2003

By: Gary Freund
(Signature of Sign Poster)

GARY FREUND
(Printed Name)

CERTIFICATE OF POSTING

Date: 5/19/03

RE: Case Number 03-454-XSPH
Petitioner/Developer: RITA L.P.
Date of Hearing/Closing: JUNE 4, 2003

This is to certify under the penalties of perjury that the necessary sign(s) required by law were posted conspicuously on the property located at WEST SIDE HONEYGO BLVD. 1010' N.E. of JOPPA ROAD

The sign(s) were posted on MAY, 18, 2003
(Month, Day, Year)

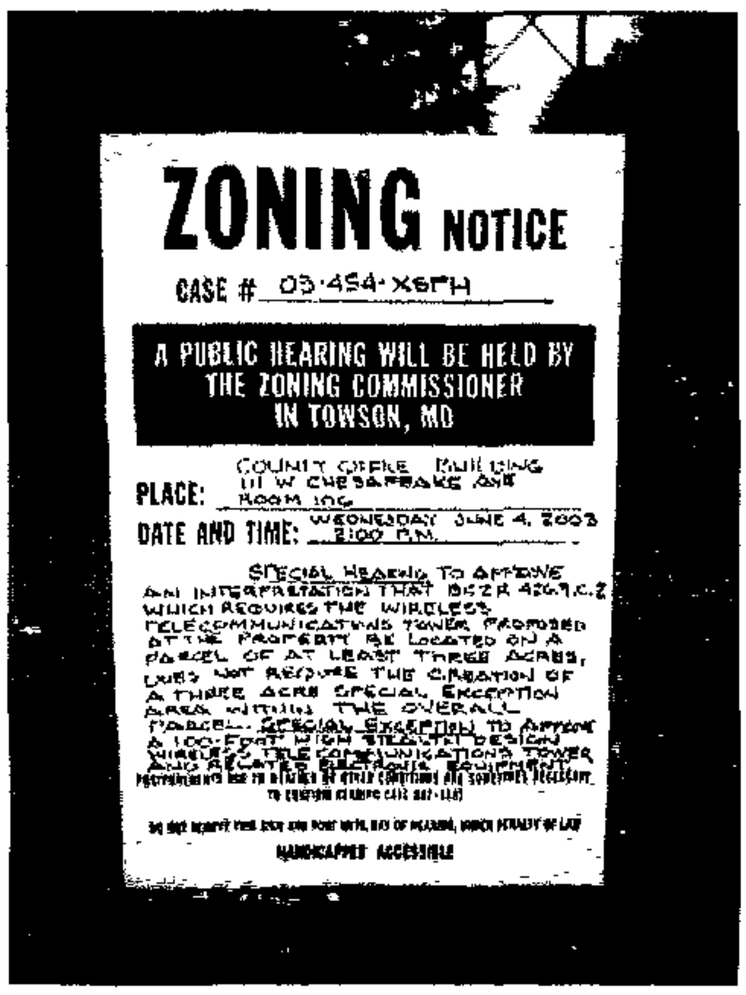

Charles E. Merritt
(Signature of Sign Poster)

CHARLES MERRITT
(Printed Name of Sign Poster)

9831 MAGLEDT ROAD
(Street Address of Sign Poster)

BALTIMORE MD 21234
(City, State, Zip Code of Sign Poster)

410 665-5562
(Telephone Number of Sign Poster)

Revised 3/1/01 - SCJ

DEPARTMENT OF PERMITS AND DEVELOPMENT MANAGEMENT
ZONING REVIEW

ADVERTISING REQUIREMENTS AND PROCEDURES FOR ZONING HEARINGS

The Baltimore County Zoning Regulations (BCZR) require that notice be given to the general public/neighboring property owners relative to property which is the subject of an upcoming zoning hearing. For those petitions which require a public hearing, this notice is accomplished by posting a sign on the property (responsibility of the petitioner) and placement of a notice in a newspaper of general circulation in the County, both at least fifteen (15) days before the hearing.

Zoning Review will ensure that the legal requirements for advertising are satisfied. However, the petitioner is responsible for the costs associated with these requirements. The newspaper will bill the person listed below for the advertising. This advertising is due upon receipt and should be remitted directly to the newspaper.

OPINIONS MAY NOT BE ISSUED UNTIL ALL ADVERTISING COSTS ARE PAID.

For Newspaper Advertising:

Item Number or Case Number: 03-454-XSPM

Petitioner: OMNIPOINT COMMUNICATIONS CAP OPERATIONS LLC

Address or Location: 9830 HONEYGO BLVD

PLEASE FORWARD ADVERTISING BILL TO:

Name: HILLORIE MORRISON

Address: 12050 BALTIMORE AVE
BELTSVILLE, MD 20705

Telephone Number: 443-570-0014

Revised 2/20/98 - SCJ

Baltimore County
Department of Permits and
Development Management

Director's Office
County Office Building
111 West Chesapeake Avenue
Towson, Maryland 21204
410-887-3353
Fax: 410-887-5708

April 9, 2003

NOTICE OF ZONING HEARING

The Zoning Commissioner of Baltimore County, by authority of the Zoning Act and Regulations of Baltimore County, will hold a public hearing in Towson, Maryland on the property identified herein as follows:

CASE NUMBER: 03-454-X SPH
9380 Honeygo Blvd., 5022 E. Joppa Road
W/side Honeygo Blvd., 1010 N/east of centerline Joppa Road
11th Election District – 5th Councilmanic District
Legal Owner: Rita L.P., Lawrence M. Macks, Partner
Contract Purchaser: Hillorie Morrison, Omnipoint Communication CAP Operations, LLC

Special Hearing to approve an interpretation that BCZR 426.9.C.2 which requires the wireless telecommunications tower proposed at the property be located on a parcel of at least three acres, does not require the creation of a three acre special exception area within the overall parcel. Special Exception to approve a 100-foot high stealth design wireless telecommunications tower and related electronic equipment.

Hearings: Wednesday, June 4, 2003 at 2:00 p.m. in Room 106, County Office Building, 111 W. Chesapeake Avenue

Arnold Jablon
Director

AJ:klm

C: Karl J. Nelson, Saul Ewing & Associates, 100 S. Charles St., Baltimore 21201
Rita, L.P., Lawrence M. Macks, Partner, 4750 Owings Mills Blvd., Baltimore 21117
Hillorie Morrison, Omnipoint Communication CAP Operations, 12050 Baltimore Ave., Beltsville 20705
Scott Rouk, Rita L.P. 4750 Owings Mills Blvd., Baltimore 21117

NOTES: (1) **THE PETITIONER MUST HAVE THE ZONING NOTICE SIGN POSTED BY AN APPROVED POSTER ON THE PROPERTY BY TUESDAY, MAY 20, 2003.**
(2) HEARINGS ARE HANDICAPPED ACCESSIBLE; FOR SPECIAL ACCOMMODATIONS PLEASE CALL THE ZONING COMMISSIONER'S OFFICE AT 410-887-4386.
(3) FOR INFORMATION CONCERNING THE FILE AND/OR HEARING, CONTACT THE ZONING REVIEW OFFICE AT 410-887-3391.

Printed with Soybean Ink
on Recycled Paper

TO: PATUXENT PUBLISHING COMPANY
Tuesday, May 20, 2003 Issue - Jeffersonian

Please forward billing to:
Hillorie Morrison
12050 Baltimore Avenue
Beltsville, MD 20705

443-570-0014

NOTICE OF ZONING HEARING

The Zoning Commissioner of Baltimore County, by authority of the Zoning Act and Regulations of Baltimore County, will hold a public hearing in Towson, Maryland on the property identified herein as follows:

CASE NUMBER: 03-454-SPHX
9380 Honeygo Blvd., 5022 E. Joppa Road
W/side Honeygo Blvd., 1010 N/east of centerline Joppa Road
11th Election District – 5th Councilmanic District
Legal Owner: Rita L.P., Lawrence M. Macks, Partner
Contract Purchaser: Hillorie Morrison, Omnipoint Communication CAP Operations, LLC

Special Hearing to approve an interpretation that BCZR 426.9.C.2 which requires the wireless telecommunications tower proposed at the property be located on a parcel of at least three acres, does not require the creation of a three acre special exception area within the overall parcel. Special Exception to approve a 100-foot high stealth design wireless telecommunications tower and related electronic equipment.

Hearings: Wednesday, June 4, 2003 at 2:00 p.m. in Room 106, County Office Building, 111 W. Chesapeake Avenue

Lawrence E. Schmidt

LAWRENCE E. SCHMIDT
ZONING COMMISSIONER FOR BALTIMORE COUNTY

NOTES: (1) HEARINGS ARE HANDICAPPED ACCESSIBLE; FOR SPECIAL ACCOMODATIONS, PLEASE CONTACT THE ZONING COMMISSIONER'S OFFICE AT 410-887-4386.
(2) FOR INFORMATION CONCERNING THE FILE AND/OR HEARING, CONTACT THE ZONING REVIEW OFFICE AT 410-887-3391.

County Board of Appeals of Baltimore County

OLD COURTHOUSE, ROOM 49
400 WASHINGTON AVENUE
TOWSON, MARYLAND 21204
410-887-3180
FAX: 410-887-3182

Resumed to 10/28/03 by agreement of Counsel

Hearing Room – Room 48
Old Courthouse, 400 Washington Avenue

September 29, 2003

NOTICE OF ASSIGNMENT

CASE #: 03-454-SPHX

IN THE MATTER OF: ***RITA L.P. –Legal Owner; Omnipoint Communiations CAP Operations LLP –C.P.***
9380 Honeygo Boulevard 11th Election District; 5th Councilmanic District

6/19/2003 –ZC's Order – Petition for Special Hearing GRANTED; Special Exception GRANTED with restrictions /wireless telecommunications tower and related electronic equipment.

ASSIGNED FOR: **WEDNESDAY, FEBRUARY 4, 2004 at 10:00 a.m.**

NOTICE: **This appeal is an evidentiary hearing; therefore, parties should consider the advisability of retaining an attorney.**

Please refer to the Board's Rules of Practice & Procedure, Appendix C, Baltimore County Code.

IMPORTANT: No postponements will be granted without sufficient reasons; said requests must be in writing and in compliance with Rule 2(b) of the Board's Rules. No postponements will be granted within 15 days of scheduled hearing date unless in full compliance with Rule 2(c).

If you have a disability requiring special accommodations, please contact this office at least one week prior to hearing date.

Kathleen C. Bianco
Administrator

---

c: Appellant : Office of People's Counsel

Counsel for Petitioners : Karl J. Nelson, Esquire
Legal Owner : Lawrence M. Macks /RITA LP
Scott Rouk /RITA LP
Contract Lessees : *Hillorie Morrison /Ryan Conaway*
Omnipoint Communications CAP Operations, LLC

Oakleigh Thorne

David Marks, President
Perry Hall Improvement Association, Inc.
Jeremiah T. Murnane, Jr.
Dennis Eckard
William Libercci
Edward Arnold

Pat Keller, Director /Planning
Lawrence E. Schmidt, Zoning Commissioner
Timothy M. Kotroco, Director /PDM

Printed with Soybean Ink
on Recycled Paper

County Board of Appeals of Baltimore County

OLD COURTHOUSE, ROOM 49
400 WASHINGTON AVENUE
TOWSON, MARYLAND 21204
410-887-3180
FAX: 410-887-3182

Hearing Room – Room 48
Old Courthouse, 400 Washington Avenue

October 7, 2003

NOTICE OF REASSIGNMENT

CASE #: 03-454-SPHX

IN THE MATTER OF: ***RITA L.P. –Legal Owner; Omnipoint Communiations CAP Operations LLP –C.P.***
9380 Honeygo Boulevard 11th Election District; 5th Councilmanic District

6/19/2003 –ZC's Order – Petition for Special Hearing GRANTED; Special Exception GRANTED with restrictions /wireless telecommunications tower and related electronic equipment.

which was assigned to be heard on 2/04/04 has been **REASSIGNED TO AN EARLIER DATE**, as agreed by Counsel to this matter; and has been

REASSIGNED FOR: **TUESDAY, OCTOBER 28, 2003 at 9:00 a.m.**

NOTICE: **This appeal is an evidentiary hearing; therefore, parties should consider the advisability of retaining an attorney.**

Please refer to the Board's Rules of Practice & Procedure, Appendix C, Baltimore County Code.

IMPORTANT: No postponements will be granted without sufficient reasons; said requests must be in writing and in compliance with Rule 2(b) of the Board's Rules. No postponements will be granted within 15 days of scheduled hearing date unless in full compliance with Rule 2(c).

If you have a disability requiring special accommodations, please contact this office at least one week prior to hearing date.

Kathleen C. Bianco
Administrator

---

c: Appellant : Office of People's Counsel

Counsel for Petitioners : Karl J. Nelson, Esquire
Legal Owner : Lawrence M. Macks /RITA LP
Scott Rouk /RITA LP
Contract Lessees : Hillorie Morrison /Ryan Conaway
Omnipoint Communications CAP Operations, LLC

Oakleigh Thorne

David Marks, President
Perry Hall Improvement Association, Inc.
Jeremiah T. Murnane, Jr.
Dennis Eckard
William Libercci
Edward Arnold

Pat Keller, Director /Planning
Lawrence E. Schmidt, Zoning Commissioner
Timothy M. Kotroco, Director /PDM

Printed with Soybean Ink
on Recycled Paper

PERRY HALL
IMPROVEMENT ASSOCIATION, INC.
P.O. Box 63 Perry Hall, Maryland 21128 http://www.bcpl.net/~phia phia@mail.bcpl.net

RESOLVED: That at the Board of Directors meeting of the Perry Hall Improvement Association held on Sunday, January 5, 2003, it was decided by the Association that responsibility for review and action on all zoning matters for the period 2003-2004 be placed in the Zoning, Development, and Permits Committee consisting of the following members, each of whom is hereby authorized to testify on behalf of the Association before the County Board of Appeals or other duly constituted zoning agency, body, or commission:

Chairman William Libercci;
Debra Beaty
Dennis Eckard
Brenda Ward
Howard Wille, Sr.

David Marks, president of the Perry Hall Improvement Association (ex officio committee member)

As witness our hands and seal this 5th day of January, 2003.

ATTEST:

Wayne Rice, Secretary

Perry Hall Improvement Association

David Marks, President

Citizens Ex No 1

AFFIVADIT

STATE OF MARYLAND
BALTIMORE COUNTY, SS:

To WIT:

I hereby swear under penalty of perjury that I am currently a duly elected member of the Zoning, Development, and Permits Committee of the Perry Hall Improvement Association.

ATTEST:

Wayne Rice, Secretary

Perry Hall Improvement Association

David Marks, President

Date: January 5, 2003

PERRY HALL
IMPROVEMENT ASSOCIATION, INC.
P.O. Box 63 Perry Hall, Maryland 21128 http://www.bcpl.net/~phla phla@mail.bcpl.net

RESOLVED: That the position of the Perry Hall Improvement Association as adopted by the Zoning, Development, and Permits Committee on the zoning matter known as:

is that:

the PHIA gives its representatives discretion to act appropriately on behalf of the organization at the forthcoming hearing.

As witness our hands and seal this _____ day of _____, 2003.

ATTEST:

Wayne Rice, Secretary

Perry Hall Improvement Association

David Marks, President

Subj: **RE: proposed stealth monopole, Honeygo Blvd. (T-Mobile BAN 254)**
Date: 5/27/03 12:08:24 PM !!!First Boot!!!
From: Hillorie.Morrison@T-Mobile.com (Morrison, Hillorie)
To: phia@bcpl.net ('Perry Hall Improvement Association'), Hillorie.Morrison@T-Mobile.com (Morrison, Hillorie)
CC: madgebill@aol.com, knelson@saul.com ('knelson@saul.com')

T-Mobile has no objection to the conditions you describe. We expect that the height, design, and color of the stealth monopole, as described in the plans, will be conditions of the special exception. Those conditions would all be tied to the special exception and could not be changed by T-Mobile or any future owner of the monopole without modifying the special exception through public hearing. As a further condition, T-Mobile can work out a landscaping plan with Avery, the planning office, the property owner, and the PHIA. That would become a certified landscape plan, to be signed off upon by Avery and it would be incorporated into the special exception.

With regard to the special hearing on the 3-acre special exception area, T-Mobile is questioning the zoning office's interpreation of that requirement. The plain meaning of the text is that a telecommunications tower be located on a parcel of at least 3 acres in a residential zone. T-Mobile does not dispute that requirement. However, the zoning office requires that a 3-acre area be delineated on the plan, which unnecessarily adds to the surveying and engineering of the site. It is that interpreation of the requirement which is the subject of the public hearing.

Please let me know if you have any other questions. Thanks for your response.

Hillorie Morrison
443-570-0014

Citizens Ex No 2

—Original Message—
From: Perry Hall Improvement Association [mailto:phia@bcpl.net]
Sent: Monday, May 26, 2003 12:31 AM
To: Morrison, Hillorie
Cc: madgebill@aol.com
Subject: RE: proposed stealth monopole, Honeygo Blvd. (T-Mobile BAN 254)

Ms. Morrison,

Thank you for contacting us regarding the upcoming tower hearing.

The Perry Hall Improvement Association is prepared to not oppose the request if the petitioners submit a list of conditions to be incorporated into the hearing officer's decision that includes the following:

– As you noted below, the complete enclosure of antennas and cables;
– A commitment that the height will be as described to the PHIA;
– Coloring of the structure to blend in with the surrounding foliage; and
– Extensive landscaping to shield the base from Honeygo Boulevard. This is very important; we do not want a single row of trees, but something that screens the unit and is preferably reviewed by the Baltimore County landscape architect, Avery Harden.

Additionally, the PHIA would like to know (before the hearing) what exactly T-Mobile will be seeking in terms of an interpretation regarding the 3-acre requirement to build this structure.

Finally, we would like to be consulted in the future if there are modifications to the structure.

Baltimore County
Department of Permits and
Development Management

Development Processing
County Office Building
111 West Chesapeake Avenue
Towson, Maryland 21204
pdmlandacq@co.ba.md.us

May 30, 2003

Karl J. Nelson
Saul Ewing & Associates
100 S. Charles Street
Baltimore, MD 21201

Dear Mr. Nelson:

RE: Case Number: 03-454-X SPH, 9380 Honeygo Blvd., 5022 E. Joppa Road

The above referenced petition was accepted for processing by the Bureau of Zoning Review, Department of Permits and Development Management (PDM) on April 1, 2003.

The Zoning Advisory Committee (ZAC), which consists of representatives from several approval agencies, has reviewed the plans that were submitted with your petition. All comments submitted thus far from the members of the ZAC are attached. These comments are not intended to indicate the appropriateness of the zoning action requested, but to ensure that all parties (zoning commissioner, attorney, petitioner, etc.) are made aware of plans or problems with regard to the proposed improvements that may have a bearing on this case. All comments will be placed in the permanent case file.

If you need further information or have any questions, please do not hesitate to contact the commenting agency.

Very truly yours,

W. Carl Richards, Jr.
Supervisor, Zoning Review

WCR:klm

Enclosures

c: People's Counsel
Lawrence Macks, Scott Rouk, RITA, L.P., 4750 Owings Mills Blvd., Baltimore 21117
Hillorie S. Morrison, Omnipoint Communications ,12050 Baltimore Ave., Beltsville 20705

Printed with Soybean Ink
on Recycled Paper

Robert L. Ehrlich, Jr., *Governor*
Michael S. Steele, *Lt. Governor*

State Highway Administration
Driven to Excel

Robert L. Flanagan, *Secretary*
Neil J. Pedersen, *Acting Administrator*

MARYLAND DEPARTMENT OF TRANSPORTATION

Date: 4.8.03

Ms. Rebecca Hart
Baltimore County Office of
Permits and Development Management
County Office Building, Room 109
Towson, Maryland 21204

RE: Baltimore County
Item No. 454 LTM

Dear. Ms. Hart:

This office has reviewed the referenced item and we have no objection to approval as it does not access a State roadway and is not affected by any State Highway Administration projects.

Should you have any questions regarding this matter, please contact Larry Gredlein at 410-545-5606 or by E-mail at (lgredlein@sha.state.md.us).

Very truly yours,

L. T. Gredlein

for Kenneth A. McDonald Jr., Chief
Engineering Access Permits Division

Baltimore County
Fire Department

700 East Joppa Road
Towson, Maryland 21286-5500
410-887-4500

County Office Building, Room 111
Mail Stop #1105
111 West Chesapeake Avenue
Towson, Maryland 21204

April 08, 2002

ATTENTION: Rebecca Hart

Distribution Meeting of: April 7, 2003

Item No.: 445-455 454

Dear Ms. Hart:

Pursuant to your request, the referenced property has been surveyed by this Bureau and the comments below are applicable and required to be corrected or incorporated into the final plans for the property.

7. The Fire Marshal's Office has no comments at this time.

LIEUTENANT JIM MEZICK
Fire Marshal's Office
PHONE 887-4881
MS-1102F

cc: File

Printed with Soybean Ink
on Recycled Paper

BALTIMORE COUNTY, MARYLAND

INTER-OFFICE CORRESPONDENCE

TO: Arnold Jablon, Director
Department of Permits and
Development Management

DATE: April 25, 2003

FROM: Arnold F. 'Pat' Keller, III
Director, Office of Planning

RECEIVED
APR 25 2003
ZONING COMMISSIONER

SUBJECT: 9380 Honeygo Blvd.

INFORMATION:

Item Number: 03-454

Petitioner: Lawrence M. Macks

Zoning: DR 10.5H/DR 3.5H

Requested Action: Special Exception

SUMMARY OF RECOMMENDATIONS:

The Office of Planning supports the petitioner's request contingent upon the following:

1. Provide a Class A landscape buffer to screen the equipment cabinets from public view.
2. Chain link fencing shall be of a dark vinyl coated material.

Prepared by: Marshall Cunningham

Section Chief: Lyn Lanham
AFK/LL:MAC:

BALTIMORE COUNTY, MARYLAND

INTEROFFICE CORRESPONDENCE

TO: Arnold Jablon, Director
Department of Permits &
Development Management

DATE: April 28, 2003

FROM: Robert W. Bowling, Supervisor
Bureau of Development Plans
Review

SUBJECT: Zoning Advisory Committee Meeting
For April 14, 2003
Item Nos. 399, 446, 448, 450, 452,
453, 454, and 455

The Bureau of Development Plans Review has reviewed the subject-zoning items, and we have no comments.

RWB:CEN:jrb

cc: File

ZAC-4-14-2003-NO COMMENT ITEMS-04222003

BALTIMORE COUNTY, MARYLAND
Board of Appeals of Baltimore County
Interoffice Correspondence

DATE: June 29, 2004

TO: Timothy Kotroco, Director
Permits & Development Management
Attn.: David Duvall

FROM: Theresa R. Shelton
Board of Appeals

SUBJECT: **RITA**
CBA No.: 03-454-SPHX
PDM File No.: 03-454-SPHX
Circuit Court Case No.: 03-C-03-13262

On April 22, 2004 a Voluntary Dismissal in Entirety was entered on the docket of the Circuit Court of Baltimore County.

No further appeals have been taken in this matter. The Board of Appeals is closing and returning the file/exhibits that are attached herewith.

Attachment: SUBJECT FILE ATTACHED AND EXHIBITS

RE:	PETITION FOR SPECIAL HEARING AND SPECIAL EXCEPTION	*	BEFORE THE
	9380 Honeygo Blvd & 5022 E Joppa Road W/side Honeygo Blvd; 1010 NE c/line Joppa	*	ZONING COMMISSIONER
	11th Election & 5th Councilmanic Districts	*	FOR
	Legal Owner(s): Rita, LP; Lawrence M Maces, Partner	*	BALTIMORE COUNTY
	Petitioner(s)	*	03-454-SPHX

* * * * * * * * * * * * *

ENTRY OF APPEARANCE

Please enter the appearance of People's Counsel in the above-captioned matter. Notice should be sent of any hearing dates or other proceedings in this matter and the passage of any preliminary or final Order. All parties should copy People's Counsel on all correspondence sent/ documentation filed in the case.

Peter Max Zimmerman
PETER MAX ZIMMERMAN
People's Counsel for Baltimore County

Carole S. Demilio
CAROLE S. DEMILIO
Deputy People's Counsel
Old Courthouse, Room 47
400 Washington Avenue
Towson, MD 21204
(410) 887-2188

CERTIFICATE OF SERVICE

I HEREBY CERTIFY that on this 10th day of April, 2003, a copy of the foregoing Entry of Appearance was mailed to Scott Rouk, 4750 Owings Mills Blvd, Baltimore, MD 21117 and to Karl J Nelson, Saul, Ewing & Associates, 100 S Charles Street, Baltimore, MD 21201, Attorney for Petitioner(s).

Peter Max Zimmerman
PETER MAX ZIMMERMAN
People's Counsel for Baltimore County

Baltimore County, Maryland

OFFICE OF PEOPLE'S COUNSEL

Room 47, Old CourtHouse
400 Washington Ave.
Towson, MD 21204

(410) 887-2188

PETER MAX ZIMMERMAN
People's Counsel

CAROLE S. DEMILIO
Deputy People's Counsel

July 3, 2003

Timothy Kotroco, Director
Department of Permits and
Development Management
111 W. Chesapeake Avenue
Towson, MD 21204

Hand-delivered

Re: PETITION FOR SPECIAL HEARING & EXCEPTION
Honeygo Boulevard, 1010' NE of the c/l of Joppa Road
(9380 Honeygo Boulevard./5022 E. Joppa Road)
11th Election District; 5th Council District
RITA, L.P., Owners; Omnipoint Communications CAP
Operations, LLC, Lessees – Petitioner(s)
Case No.: 03-454-SPHX

Dear Mr. Kotroco:

Please enter an appeal by the People's Counsel for Baltimore County to the County Board of Appeals from the Findings of Fact and Conclusions of Law dated June 19, 2003 by the Baltimore County Zoning Commissioner in the above-entitled case

Please forward copies of any papers pertinent to the appeal as necessary and appropriate.

RECEIVED
JUL 03 2003
Per.....

Very truly yours,

Peter Max Zimmerman

Peter Max Zimmerman
People's Counsel for Baltimore County

Carole S. Demilio

Carole S. Demilio
Deputy People's Counsel

PMZ/CSD/rmw

cc: Karl J. Nelson, Esquire, Saul Ewing & Associates, 100 S Charles Street, Balto, MD 21201

Baltimore County
Department of Permits and
Development Management

Director's Office
County Office Building
111 West Chesapeake Avenue
Towson, Maryland 21204
410-887-3353
Fax: 410-887-5708

July 9, 2003

RECEIVED
JUL 0 9 2003
BALTIMORE COUNTY
BOARD OF APPEALS

Mr. Karl J. Nelson
Saul Ewing & Associates
100 S. Charles Street
Baltimore, MD 21201

Dear Mr. Nelson:

RE: Case No. 03-454-SPHX

Please be advised that an appeal of the above-referenced case was filed in this office on July 3, 2003 by Peter M. Zimmerman, People's Counsel of Baltimore County. All materials relative to the case have been forwarded to the Baltimore County Board of Appeals (Board).

If you are the person or party taking the appeal, you should notify other similarly interested parties or persons known to you of the appeal. If you are an attorney of record, it is your responsibility to notify your client.

If you have any questions concerning this matter, please do not hesitate to call the Board at 410-887-3180.

Sincerely,

Timothy Kotroco

Timothy Kotroco
Director

KT:rlh

c: Lawrence E. Schmidt, Zoning Commissioner
Timothy Kotroco, Director of PDM
People's Counsel
RITA, L. P., Lawrence Macks, Partner, 4750 Owings Mills Blvd., Owings Mills 21117
Scott Rouk, RITA, L.P., 4750 Owings Mills Blvd., Owings Mills 21117
Hillorie Morrison, Omnipoint Communications Cap Operations, 12050 Baltimore Avenue, Beltsville 20705

Printed with Soybean Ink
on Recycled Paper

APPEAL

Petition for Special Hearing
and Special Exception
9380 Honeygo Blvd.
W/side Honeygo Blvd., 1010 n/east of centerline of Joppa Road
11th ED – 5th CD
RITA, L. P. – Legal Owner
Contract Purchaser: Hillorie Morrison, Omnipoint Communications
Cap Communications, Inc.

Case No.: 03-454-XSPH

Petition for Special Hearing (April 1, 2003)

Zoning Description of Property

Notice of Zoning Hearing (April 9, 2003)

Certification of Publication (The Jeffersonian Issue May 20, 2003)

Certificate of Posting (May 18, 2003) by Charles E. Merritt

Entry of Appearance by People's Counsel (April 10, 2003)

Petitioner(s) Sign-In Sheet
One Sheet

Protestant(s) Sign-In Sheet
None

Citizen(s) Sign-In Sheet
One Sheet

Zoning Advisory Committee Comments

Petitioners' Exhibit
1a. Overlay map
3a. 1" = 2000' Map

Citizens Exhibits:
1. Letter from Perry Hall Improvement Assoc.
2. Email from Hillorie Morrison

Miscellaneous (Not Marked as Exhibit)
1. Memo from Tower Review Committee to Don Rascoe
2. Note to file from Planner

Zoning Commissioner's Order (June 19, 2003 - GRANTED)

Notice of Appeal received on July 3, 2003 by Peter M. Zimmerman, People's Counsel of Baltimore County

c: People's Counsel of Baltimore County, MS #2010
Zoning Commissioner/Deputy Zoning Commissioner
Timothy Kotroco, Director of PDM
Karl J. Nelson, Saul Ewing Associates, 100 S. Charles Street, Baltimore 21201

date sent rlh 7/9/03

Case No. 03-454-SPHX

In the Matter of: RITA LP – Legal Owner; Omnipoint Comm.
CAP Operations, Inc. – Contract Lessee

SPH – To determine that § 426.9.C.2 does not require creation of 3-acre special exception area for proposed wireless telecomm tower; and SE – To approve installation of 100' high stealth design wireless telecomm tower and related electronic equipment on subject property.

6/19/03 – Z.C.'s Order in which requested relief was GRANTED with restrictions.

9/29/03 –Notice of Assignment sent to following; assigned for hearing on Wednesday, February 4, 2004, at 10 a.m.:

Office of People's Counsel
Karl J. Nelson, Esquire
Lawrence M. Macks /RITA LP
Scott Rouk /RITA LP
Hillorie Morrison /Ryan Conaway
Omnipoint Communications CAP Operations, LLC
Oakleigh Thorne
David Marks, President
Perry Hall Improvement Association, Inc.
Jeremiah T. Murnane, Jr.
Dennis Eckard
William Libercci
Edward Arnold
Pat Keller, Director /Planning
Lawrence E. Schmidt, Zoning Commissioner
Timothy M. Kotroco, Director /PDM

10/07/03 – T/C from Karl Nelson – he has reached agreement with People's Counsel; requesting early a.m. hearing in near future to put settlement on the record.
-- Confirmed above with Carole Demilio, Deputy People's Counsel; 10/28/03 works for both parties. Notice of Reassignment sent this date (also copy via FAX to Mr. Nelson); reassigned to Tuesday, October 28, 2003 at 9:00 a.m. FYI copy to 2-5-6 alerting to early start on 10/28/03.

10/28/03 – Board convened for hearing as specially assigned by request of counsel to this matter (settlement); (Wescott and Adams – 2 members by agreement of parties); completed this date; Mr. Nelson to submit proposed order pursuant to agreement of parties.

11/05/03 – Received via e-mail – joint proposed decision and order from Karl Nelson; verified this date with R. Wheatley, Office of People's Counsel, that the draft order as proposed has been reviewed by C. Demilio and incorporates her comments /edits. Printed final this date in Board's format for signature by Marks and Wescott.

BALTIMORE COUNTY, MARYLAND
Interoffice Correspondence

DATE: March 4, 2003

TO: Donald T. Rascoe, Development Manager
Department of Permits and Development Management

FROM: Tower Review Committee

SUBJECT: T-Mobile New Tower – Honeygo Blvd.

The Tower Review Committee met on February 25, 2003 and is making the following advisory comments to the Development Review Committee (DRC) in accordance with section 426.4 of the Baltimore County Zoning Regulations in reference to the proposed construction of a 100-foot stealth tower to be located at 5022 E. Joppa Road at Honeygo Blvd., Baltimore County, Maryland.

- *Antennas should be placed on existing towers, buildings, and structures, including those of public utilities, where feasible.*

Findings: T-Mobile has provided all requested information to the Tower Review Committee (TRC) to successfully demonstrate that no other co-location opportunities exist at this location that would suffice in providing their requested coverage. Subsequent searches by several committee members confirm that no co-location opportunities exist to meet the technical need of T-Mobile's proposed coverage search ring.

- *If a tower must be built, the tower should be: Constructed to accommodate at least three providers.*

Findings: T-Mobile has stated that the new tower will be constructed to accommodate three providers.

- *Erected in a medium or high intensity commercial zone when available.*

Findings: The land in question is located in a D.R.10.5 zone. This tower will require a special exception hearing.

- *Located and designed to minimize its visibility from residential and transitional zone.*

Findings: The tower in question and its stealth design is expected to extend above the existing tree line by approximately 30-feet. In addition, the construction will be shielded by the trees at the ground level. We find that the visual impact will be negligible.

#454

In addition, the representatives from T-Mobile stated, that the landlord of the property had been in contact with the adjacent Church and that they were not opposed to the construction of the tower. T-Mobile has also contacted the Perry Hall Improvement Association which has had a package of information sent to them for review.

Conclusion

By a unanimous vote of the Tower Review Committee, it was agreed that the advisory comments provided above be forwarded to the Development Review Committee for further processing.

Tower Review Committee

Charles C. Dennis, Tower Coordinator
Jeff Long, Office of Planning
Harry Wujek, Community Member TRC
Richard Sterba, OIT Representative

CC: Patrick Roddy, Baltimore County Office of Law
Hillorie Morrison, T-Mobile
Thomas Iler, Director, OIT

Attachments: Original T-Mobile Application to DRC only

BALTIMORE COUNTY, MARYLAND
Interoffice Memorandum

DATE: 4/1/03

TO: File, Mr. Carl Richards

FROM: Lloyd T. Moxley

SUBJECT: Case No. 03-454-XSPH

It is the position of the Office of Zoning Review that the entire 3 acre site required for towers allowed by special exception within residential or transitional zones **not** zoned R.C. pursuant to Section 426.9.C.2 BCZR must be included within the area described in support of the special exception. It has not been demonstrated to this office how the integrity of the required 3 acre area can be maintained without having special exception status overall.

Department of Permits and Development Management

Director's Office
County Office Building
111 W. Chesapeake Avenue
Towson, Maryland 21204
Tel: 410-887-3353 • Fax: 410-887-5708

Baltimore County

James T. Smith, Jr., County Executive
Timothy M. Kotroco, Director

December 29, 2003

Mr. Karl J. Nelson
Saul Ewing LLP.
100 South Charles ST.
Baltimore, Maryland 21201

Dear Mr. Nelson:

RE: In the Matter of RITA LP; Omnipoint Communications
CAP Operations LLC, Case No. 03-454-SPHX
11th Election District

Your letter dated December 11, 2003 addressed to Tim Kotroco, Director of Permits and Development Management has been referred to me for reply. Upon review of your letter in conjunction with the Hoffman letter dated December 4, 2003 the following verifications are offered.

The areas of concern identified in the letter from Robert Hoffman to you are multifold and involve more than the question of permitted uses. The use most particularly described in the Hoffman letter, which also is shown on the petitioners exhibit in the above referenced case, that being a storm water management reservation/facility, is a landform and therefore **not** regulated by the Baltimore County Zoning Regulations (BCZR). Provided the special exception area does not also serve as a residential transition area *buffer* the proposed storm water management reservation/facility would be allowed pursuant to the approved site plan in said case. Any and all other uses **that are regulated** by the BCZR will be subject to same. A Special Hearing is required to consider if such uses proposed to be located within the special exception area established by case no. 03-454-SPHX including required landscape screening can co-exist with the wireless communications use area already established and also to amend the approved zoning site plan for case no. 03-454-SPHX.

Provided the use is not altered or affected within the special exception area, the ownership of said area is not an issue for the Baltimore County the Office of Zoning Review. As to whether the special exception area adversely affects the suitability of the property in regards to conveyance of ownership to Baltimore County this office can only recommend you contact those county agencies most involved with the establishment of the conveyance areas to include but not limited to DEPRM, the Bureau of Land Acquisition and the Law Office.

Printed on Recycled Paper

I trust that the information set forth in this letter is sufficiently detailed and responsive to the request. If you need further information or have any question, please do not hesitate to contact me at 410-887-3391.

Sincerely,

Lloyd T. Moxley
Planner II,
Zoning Review

LTM

JEREMIAH T. MURNANE, JR.
9613 Haven Farm Road - Unit M
Perry Hall, Maryland 21128
Phone: (410) 248-0840
Fax: (410) 248-0846
E-mail: jerpegsunchaser@att.net

August 27, 2003

Baltimore County Board of Appeals
Old Courthouse Building – Room 49
Towson MD 21204

Ref: Case No. 03-454-SPHX
Morrison Property

Dear Sir/Madam:

Please place my name on your list of interested residents so that I will receive any communications that the Board of Appeals will send out relative to this case.

Thank you very much;

Sincerely yours,

J T Murnane, Jr

RECEIVED
AUG 29 2003
BALTIMORE COUNTY
BOARD OF APPEALS

Copied to file
8/29/03

PLEASE PRINT CLEARLY

CASE NAME
CASE NUMBER 03-454-XSPH
DATE 6-4-03

PETITIONER'S SIGN-IN SHEET

NAME	ADDRESS	CITY, STATE, ZIP	E-MAIL
Karl Nelson	100 S. Charles St.	Baltimore MD 21202	knelson@sail.com
Hillorie Morrison	12050 Baltimore Ave	Beltsville, MD 20705	hillorie.morrison@t-mobile.com
Ryan Conaway	12050 Baltimore Ave.	Beltsville, MD 20705	ryan.conaway@t-mobile.com
Ashleigh Thorne	10605 Concord St.	Kensington MD 20895	—
Edward Arnold	9502 Amberleigh Ln	Perry Hall	CITIZENS
Ted Grochowina	9500 Amberleigh Ln.	Perry Hall MD. 21128	

PLEASE PRINT CLEARLY

CASE NAME
CASE NUMBER 03-454-XSPH
DATE 6-4-03

CITIZEN'S SIGN-IN SHEET

NAME	ADDRESS	CITY, STATE, ZIP	E- MAIL
DENNIS ECKARD	39 BANGERT AVE	PERRY HALL, MD. 21128	
~~WILLIAM MATIBERCI~~			
WILLIAM LIBERCCI	19 SHAWN CT	BALTO. MD. 21236	

IN THE MATTER OF:	* BEFORE THE
RITA L.P. - Legal Owner,	* COUNTY BOARD OF APPEALS
Omnipoint Communications	* OF
CAP Operations LLP - C.P.	* BALTIMORE COUNTY
9380 Honeygo Boulevard	* CASE NO.: 03-454-SPHX
11th Election District	* October 28, 2003
5th Councilmanic District	*

* * * * *

The above-entitled matter came on for hearing before the County Board of Appeals of Baltimore County at the Old Courthouse, 400 Washington Avenue, Towson, Maryland 21204, at 9 o'clock a.m., October 28, 2003.

* * * * *

ORIGINAL

Reported by:

C.E. Peatt

1 BOARD MEMBERS:
2
3 LAWRENCE S. WESCOTT, Chairman
4 CHARLES L. MARKS
5
6
7 APPEARANCES:
8 KARL J. NELSON, Esquire
On behalf of Petitioner
9
CAROLE S. DEMILIO, Esquire
10 Deputy People's Counsel
On behalf of Baltimore County
11
12
13
14
15
16
17
18
19
20
21

1 P R O C E E D I N G S
2 * * * * *
3 THE CHAIRMAN: Good morning, ladies and
4 gentlemen. This Is a regular meeting of the County Board
5 of Appeals for Baltimore County in Case No. 03-454-SPHX,
6 in the matter of Rita L.P.- legal Owner Omnipoint
7 Communications CAP Operations LLP - C.P., 9380 Honeygo
8 Boulevard, in the 11th Election District, 5th Councilmanic
9 District.
10 This is an appeal from the Zoning Commissioner
11 where a petition for special hearing was granted, special
12 exception granted with restrictions for a wireless
13 telecommunication tower and related electronic equipment.
14 Would counsel please state their names, for the record.
15 MR. NELSON: Karl Nelson, on behalf of Omnipoint.
16 MS. DEMILIO: Carole Demilio, Deputy People's
17 Counsel.
18 THE CHAIRMAN: Thank you. I understand you have
19 a settlement of this matter, is that correct?
20 MR. NELSON: Yes, sir.
21 THE CHAIRMAN: I do want to note that we only

1 have two Board members here this morning, but since it's a
2 settlement, we can go with two Board members, assuming
3 there's no objection?
4 MS. DEMILIO: No objection.
5 MR. NELSON: None here.
6 THE CHAIRMAN: Okay.
7 MR. NELSON: The case below consisted of two
8 different types of requests for relief.
9 There was the special exception request for the
10 tower use itself, which is a 100-foot stealth pole, with
11 the antenna to be mounted inside the pole, and then part
12 of that special exception requirement is, since this is a
13 D.R. zoned piece of property, that the pole be located on
14 a parcel of at least three acres.
15 The pole is, in fact, located on a parcel that is
16 over ten acres, but the county's interpretation of that
17 three-acre requirement was that it provide within that ten
18 acres, a three-acre special exception area. Omnipoint
19 disagreed with that interpretation.
20 Despite our disagreement, we show the three-acre
21 special exception area on the plan, but had asked the

1 Zoning Commissioner to rule that the three-acre special
2 exception area within the ten acres was not a requirement
3 of the applicable ordinance provision.
4 So there were two separate requests for relief.
5 One was just to grant the special exception. The other
6 was an interpretation from the Zoning Commissioner that
7 the only requirement for three acres was that the overall
8 parcel be three acres, rather than there be a three-acre
9 set-aside within the ten acres, if I explained that in a
10 way that made sense.
11 The Zoning Commissioner granted both forms of
12 requested relief, and the People's Counsel appealed.
13 It's also worth noting that Mr. Libercci, who's
14 in the back and represents the citizens, asked Mr. Schmidt
15 to amend his order to provide a language in the order that
16 the antennas would be located inside of the pole as a
17 condition of approval. And Omnipoint, my client, agreed
18 to that condition. It just never made its way into the
19 order.
20 So if I forget to mention it later, one of the
21 things we're asking for here is a provision in your order

Page 6

1 that says that the parties agree that the antennas would
2 be mounted internally inside the pole.
3 After the Zoning Commissioner's decision came
4 out, People's Counsel filed an appeal.
5 Conversation ensued between Ms. Demilio, Mr.
6 Zimmerman, and me, about the nature of the appeal. And,
7 in a sense, I was told that they were not appealing the
8 special exception, per se; they were concerned, rather,
9 about the Zoning Commissioner's decision as to the meaning
10 of the three-acre requirement.
11 Because we already had the three acres shown on
12 the plan and, quite frankly, it wasn't worth us fighting
13 about at this point, we agreed that we would withdraw the
14 request for interpretation of that section, that we would
15 revise the plan to make clear that there is a three-acre
16 special exception area shown on the plan, that there are
17 no other uses in that three acres or other structures, and
18 the plan has been so amended.
19 I'm going to hand it up to in a moment, the
20 amended plan. Ms. Demilio and Mr. Zimmerman indicated
21 that if we would withdraw the special hearing request and

Page 7

1 amend the plan in the fashion that I've just described,
2 they would have no further objection to the case going
3 forward, and they would then withdraw their appeal.
4 So I think the legal procedure that we are going
5 through here, I am amending our site plan to add a couple
6 notes that I just described and, therefore, we are going
7 to withdrew our special hearing request.
8 And I believe Ms. Demilio is going to tell you
9 then that they're going to withdraw their appeal of the
10 remainder of the case, and we would simply ask for an
11 order to be issued from the Board approving the special
12 exception with the three-acre area, dismissing the request
13 for the special hearing on the three-acre requirement, and
14 including the request by the citizens that the antenna be
15 mounted inside the pole. And I think it's relatively
16 confusing, what I've just said.
17 THE CHAIRMAN: Well, we're going to try to
18 unconfuse that by having you all agree on --
19 MS. DEMILIO: Can I make a few comment.
20 THE CHAIRMAN: Sure.
21 MS. DEMILIO: Mr. Nelson is correct that he's

Page 8

1 going to withdraw the petition for special hearing, with
2 the condition that he is amending his special exception to
3 provide for an amended site plan, and the amended special
4 exception will delineate the three-acre site, the
5 three-acre area on the entire property, that that
6 three-acre area contains no other uses other than the
7 proposed tower and the related equipment, and that the
8 special exception is also amended to the extent that the
9 tower will be what is known as the stealth tower which
10 requires an internal antenna.
11 And I would like to point out that Mr. Libercci,
12 William Libercci, and Dennis Eckard are here from the
13 Perry Hall Community Association.
14 They appeared below, and they are interested in
15 this case, and they are in agreement as to the process and
16 the procedure that the case has taken to this point.
17 So I would also ask that the amended site plan
18 that's been submitted be referenced in the order, and that
19 is the site plan that controls the development of this
20 property, and that the amended site plan delete any
21 reference to the special hearing request, now that it has

Page 9

1 been withdrawn.
2 Given all those conditions, our office will
3 withdraw its appeal regarding the special exception issues
4 that had been approved by the Zoning Commissioner below.
5 I believe that -- I think the Board is required
6 to draft an order on this matter, subject to a revisory
7 power under the Board's rules that would allow for any
8 mistake or irregularity to be corrected under the revisory
9 power. So that's the process that I think we should
10 follow in this case.
11 THE CHAIRMAN: Anything further?
12 MR. NELSON: No. Yes. Actually, the one exhibit
13 that we would offer as Petitioner No. 1 is the amended
14 site plan that contains the language raised by Ms.
15 Demilio.
16 The one thing I would note, for the record, this
17 plan does say on it -- which was, quite frankly, just an
18 error on the title box -- on the far right-hand, Plan to
19 Accompany DRC Request and Special Exception Hearing, I am
20 saying here, orally, on the record, that "And Special
21 Hearing" is a mistake, and if you will allow me, I will

1 just cross that out and initial it.
2 THE CHAIRMAN: Why don't you do that?
3 MR. NELSON: (Indicating.) With that, I would
4 offer this as Petitioner's Exhibit No. 1.
5 MS. DEMILIO: We have no objection. If I may
6 just add one thing Mr. Libercci reminded me of, Mr.
7 Libercci just pointed out that the stealth tower which
8 requires the antenna to be mounted internally should apply
9 to any user of this tower, not just Omnipoint. I think
10 all parties agree to that.
11 MR. NELSON: I think they're just looking for a
12 condition that these antennas and any future antennas will
13 be mounted inside the pole.
14 MR. MARKS: Is the basin to the antenna going to
15 be enclosed?
16 MR. NELSON: It's within a fenced compound.
17 MR. MARKS: You can secure areas so teenagers or
18 whatever can't climb up?
19 MR. NELSON: Yes, sir. And it has an eight-foot
20 fence with barbed wire around the top of it.
21 THE CHAIRMAN: Off the record.

1 (Discussion held off the record.)
2 THE CHAIRMAN: Mr. Nelson is over there nodding
3 his head in agreement that he will prepare the order and
4 review it with you.
5 MS. DEMILIO: Fine.
6 THE CHAIRMAN: And then submit it to us.
7 MR. NELSON: That is absolutely fine, and, in
8 fact, because we are in somewhat of a hurry, I can assure
9 you we will get this thing written up fairly quickly.
10 THE CHAIRMAN: Well, I think, in that case, it
11 would behoove you to do that. It's agreeable then, Mr.
12 Nelson will prepare an order, review it with Ms. Demilio,
13 and submit it to the Board for the Board's approval.
14 MR. NELSON: Thank you.
15 MS. DEMILIO: Thank you.
16 (Hearing concluded.)
17 * * * * *
18
19
20
21

Pg No 1

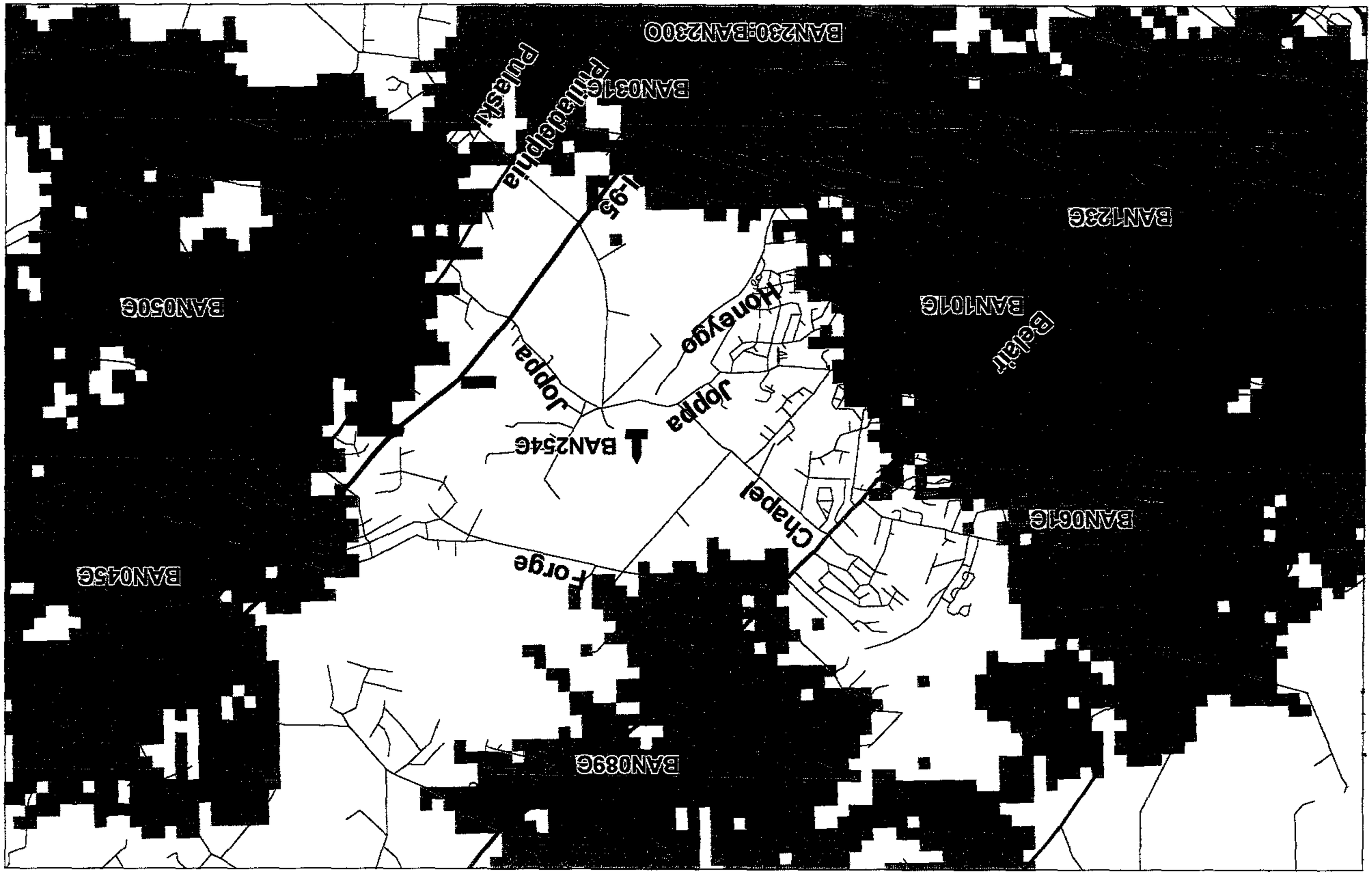
BAN089G
BAN045G
BAN050G
BAN061G
BAN101G
BAN123G
BAN031G
BAN230;BAN230O
BAN254G
Forge
Chapel
Joppa
Joppa
Honeygo
Belair
I-95
Philadelphia
Pulaski

BAN 254D, View North from parking lot of Camp Chapel United Methodist Church, Joppa Road and Honeygo Blvd., with proposed equipment.

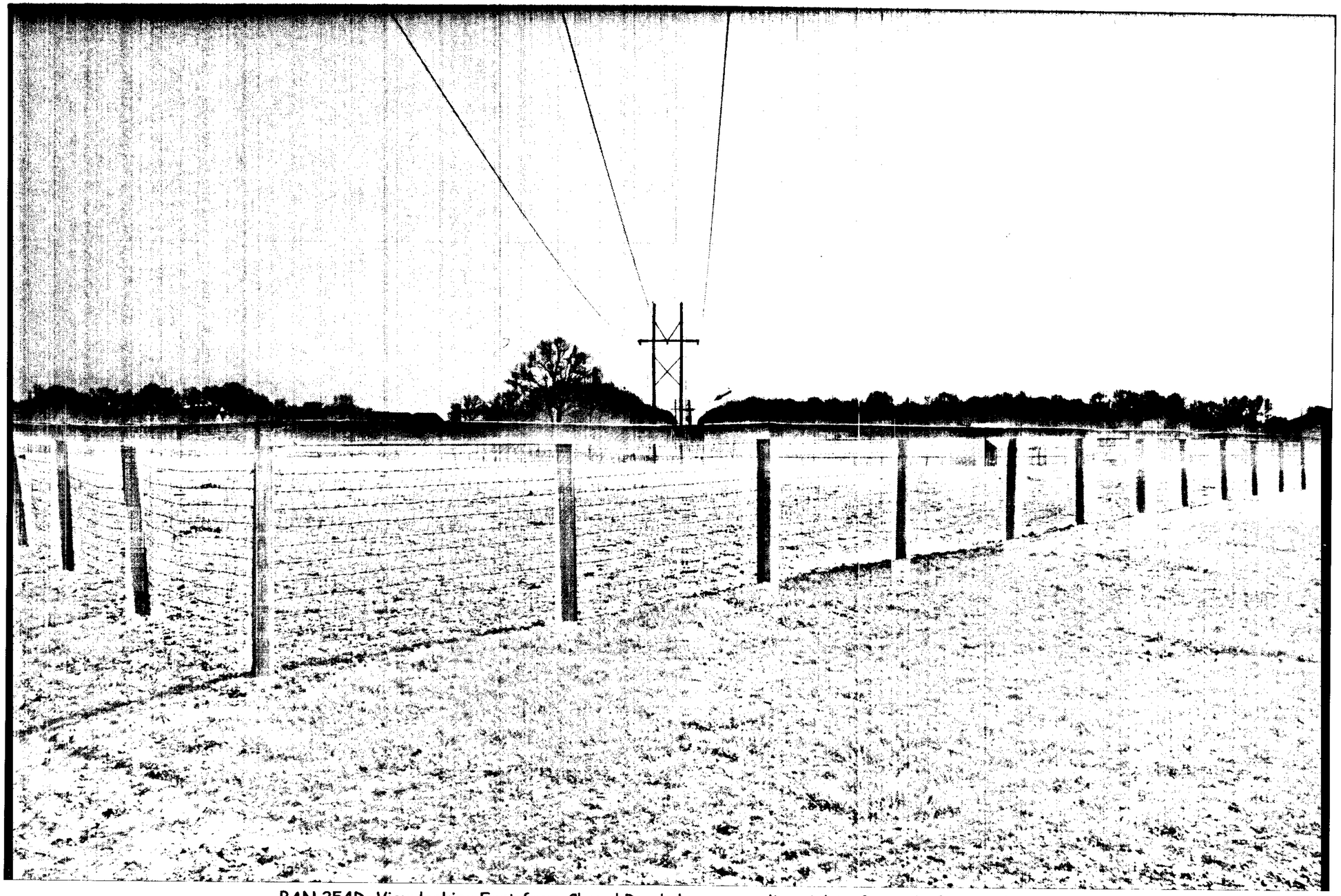

BAN 254D, View looking East from Chapel Road along power line right-of-way, before equipment.

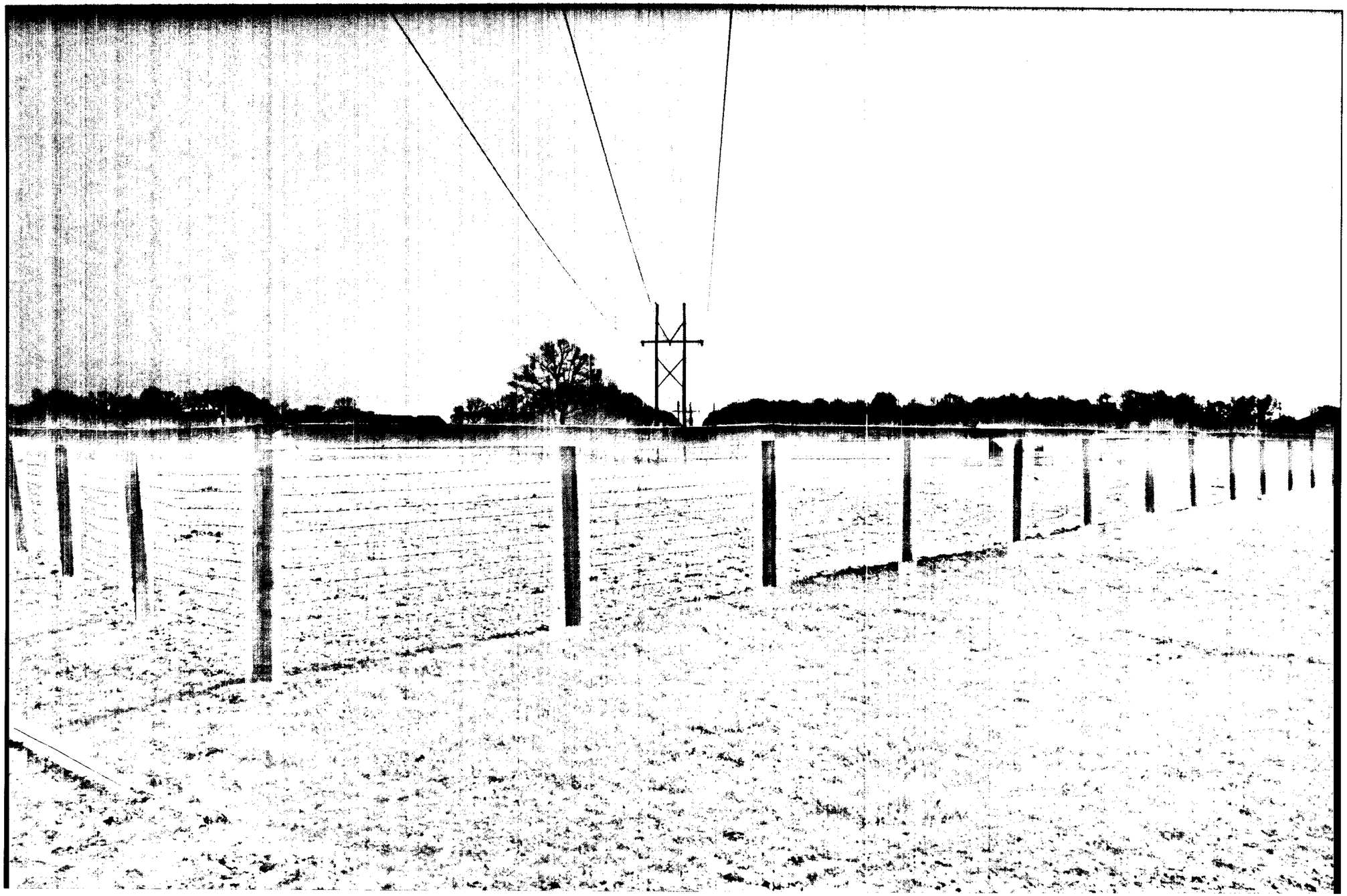

BAN 254D, View looking East from Chapel Road along power line right-of-way, with equipment.

BAN 254D, View North from parking lot of Camp Chapel United Methodist Church, Joppa Road and Honeygo Blvd., before proposed equipment.

BAN 254D, View North from parking lot of Camp Chapel United Methodist Church, Joppa Road and Honeygo Blvd., with proposed equipment.

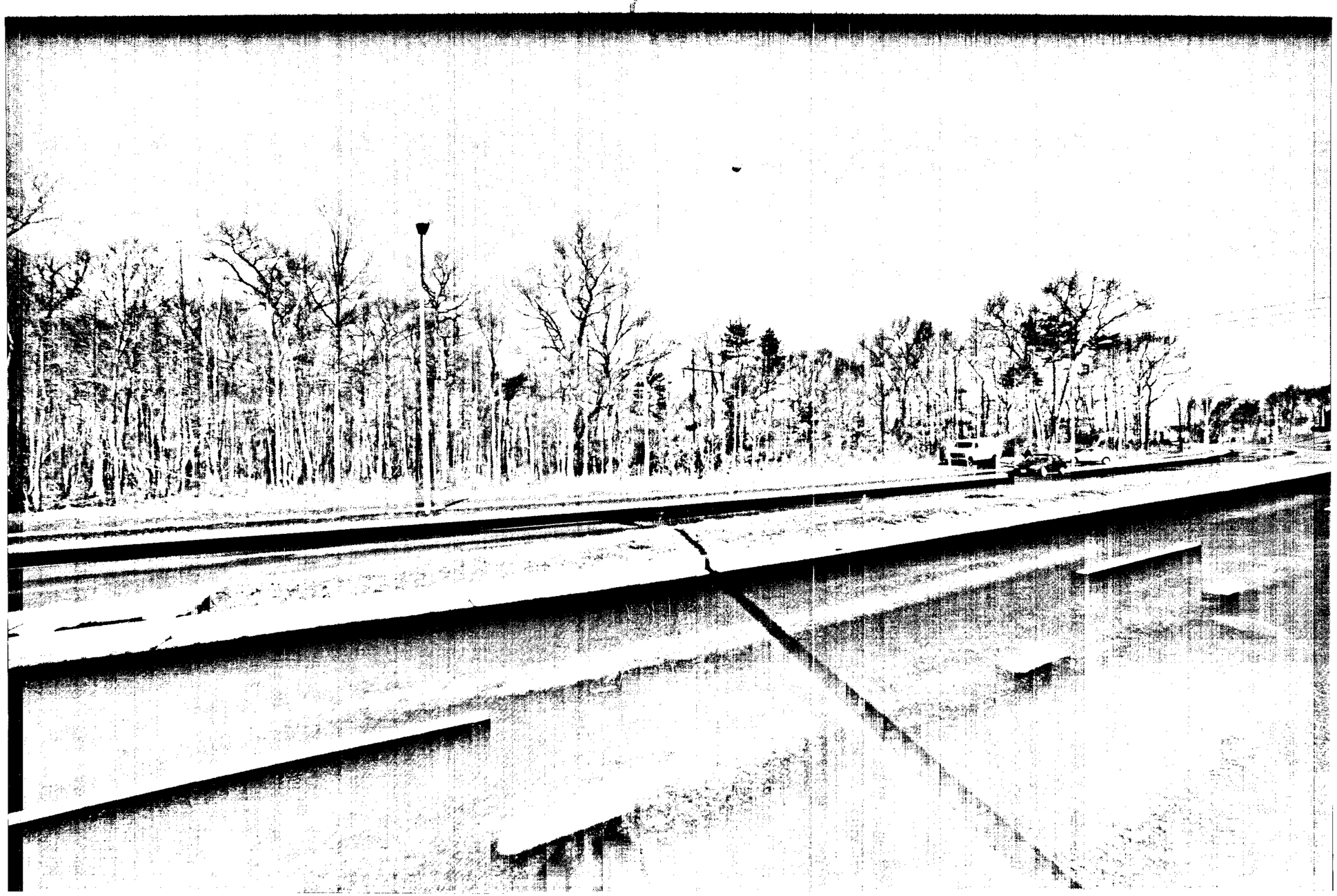

BAN 254D, View from Honeygo Blvd., Nlorth bound before proposed pole and equipment.

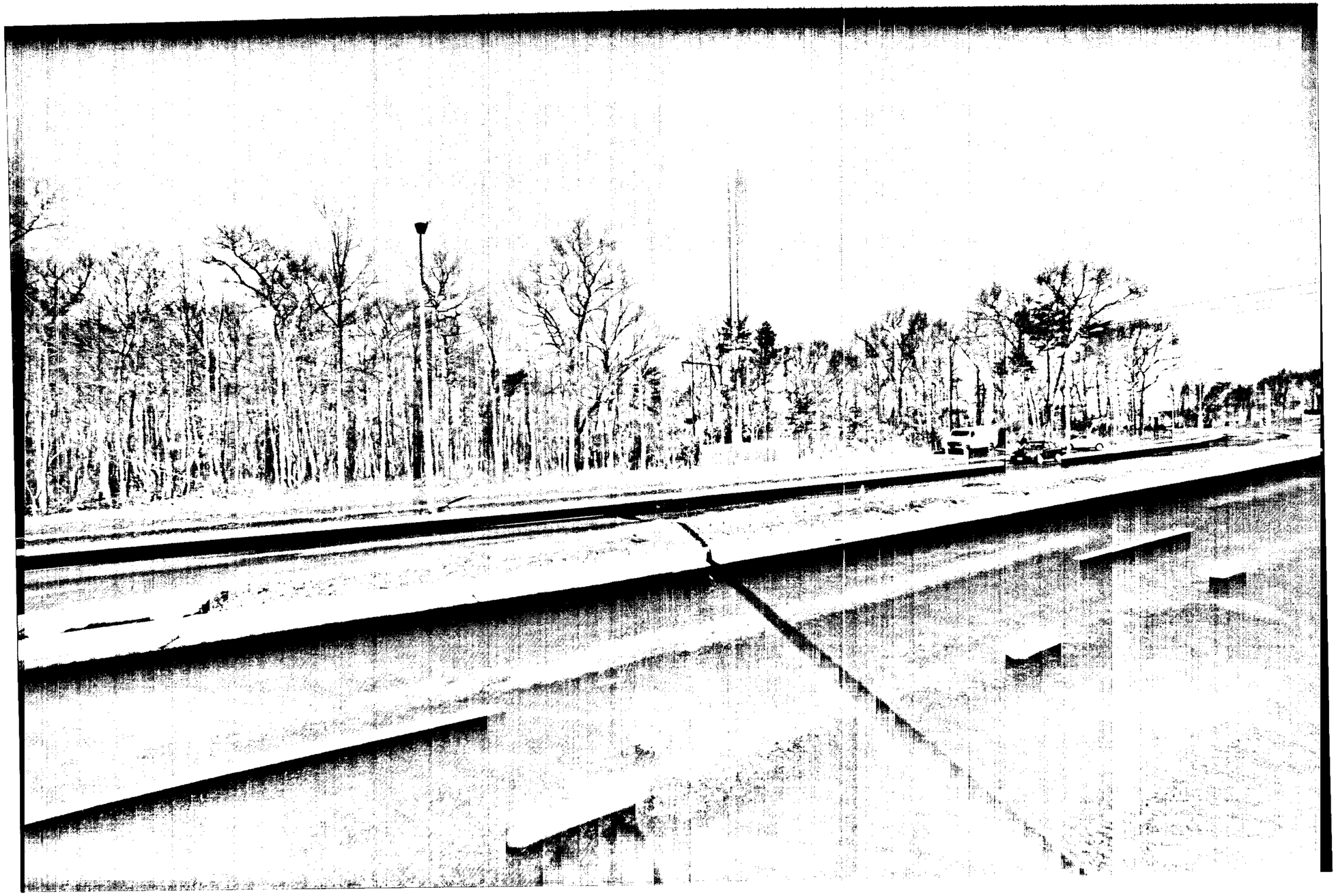

BAN 254D, View from Honeygo Blvd., North bound with proposed pole and equipment.

BAN 254D, View from Honeygo Blvd., Apartments looking Southwest before proposed pole and equipment.

BAN 254D, View from Honeygo Blvd., Appartments looking Southwest with proposed pole and equipment.

BAN 254D, View from Honeygo Blvd., Apartments looking South before proposed pole and equipment.

BAN 254D, View from Honeygo Blvd., Apartments looking South with proposed pole and equipment.

BAN 254D, View North from parking lot of Camp Chapel United Methodist Church, Joppa Road and Honeygo Blvd., before proposed equipment.

ZONING HISTORY: PDM XI-843
ALTERNATE DEVELOPMENT PLAN DRC 070802G
DRC 070802G
DRC 080700I

THE PROPOSED DEVELOPMENT IS NOT LOCATED WITHIN A FLOODPLAIN AND IS NOT WITHIN THE THE CRITICAL AREA OF THE CHESAPEAKE BAY.

SPECIAL EXCEPTION NOTES

1. PER SECTION 426.1, THE PROPOSED STEALTH DESIGN MONOPOLE IS DEFINED AS A TOWER: "TOWER: A SELF-SUPPORTING, GUYED OR FREESTANDING STRUCTURE THAT IS DESIGNED AND CONSTRUCTED FOR THE PURPOSE OF SUPPORTING ONE OR MORE WIRELESS TELECOMMUNICATIONS ANTENNAS FOR TELEPHONE, RADIO AND SIMILIAR COMMUNICATION PURPOSES, WHETHER SUCH SUPPORT IS THE PRIMARY OR SECONDARY PURPOSE OF TE STRUCTURE."

2. PER SECTION 426.2, THE PROPOSALS MEETS THE LEGISLATIVE POLICY FOR SITING OF WIRELESS TELECOMMUNICATIONS ANTENNAS AND TOWERS, AS DOCUMENTED IN THE REPORT OF THE FEBRUARY 25, 2003 MEETING OF THE BALTIMORE COUNTY TOWER REVIEW COMMITTEE.

3. THE EXCEPTIONS OF 426.3 ARE NOT APPLICABLE TO THE PROPOSED TOWER.

4. PER SECTION 426.4, THE TOWER REVIEW COMMITTEE REVIEWED THE APPLICATION AND VOTED FOR A POSITIVE RECOMMENDATION AT ITS MEETING OF FEBRUARY 25, 2003.

5. PER SECTION 426.5, THE PROPOSED TOWER IS PERMITTED BY SPECIAL EXCEPTION IN THE DR 10.5 ZONE.

6. PER SECTION 426.6A, THE TOWER MEETS ALL SETBACK REQUIREMENTS; 426.6B, NO STROBOSCOPIC LIGHTS WILL BE PLACED ON THE TOWER AND IT WILL BE PAINTED BROWN TO BLEND WITH THE TREES; 426.C, THE EQUIPMENT AREA WILL BE FENCED AND SCREENED AS RECOMMENDED BY THE BALTIMORE COUNTY PLANNING OFFICE; 426.6D, THE OWNER OF THE TOWER SHALL CERTIFY THAT THE TOWER MEETS ALL SAFETY REQUIREMENTS UPON COMPLETION AND EVERY FIVE YEARS; 426.6E, THE TOWER OWNER SHALL SUBMIT ANNUALLY TO THE TOWER COORDINATOR WRITTEN CERTIFICATION AS TO THE NUMBER OF PROVIDERS AND ANTENNAS ON THE TOWER.

7. PER SECTION 426.7, APPLICANT SHALL PROVIDE A SECURITY BOND OR FEE AS DETERMINED BY THE COUNTY.

8. PER SECTION 426.8, THE TOWER AND SUPPORTING EQUIPMENT SHALL BE MAINTAINED IN GOOD WORKING CONDITION WITH NO UNSAFE OR HAZARDOUS CONDITIONS.

9. PER SECTION 426.9, AN EXISTING TOWER OR STRUCTURE WAS NOT AVAILABLE. THE TRANSMISSION TOWERS CROSSING THE PARCEL COULD NOT BE USED FOR THE TELECOMMUNICATIONS DUE TO AN AGREEMENT BETWEEN BG&E AND THE DEPARTMENT OF DEFENSE. THE PROPOSED TOWER WILL BE LOCATED CLOSE TO THE FOREST BUFFER DEFINED FOR THE HONEYGO VILLE CENTER AND CLOSE TO THE TRANSMISSION TOWERS. DUE TO THESE FEATURES, THE TOWER WILL BE LESS VISIBLE ON THE DR 10.5 PORTION OF THE SITE THAN ON THE BL-H PORTION. NO OTHER MEDIUM OR HIGH INTENSITY ZONE WAS AVAILABLE FOR THE PROPOSED TOWER. THE TOWER HAS BEEN DESIGNED TO ENABLE ONE ADDITIONAL CARRIER TO LOCATE WITHIN THE TOWER. DUE TO THE STEALTH DESIGN, IT IS NOT TECHNICALLY FEASIBLE TO ACCOMMODATE A SECOND CARRIER. THE TOWER WILL BE PAINTED BROWN TO BLEND WITH THE TREES IN THE AREA. THE TOWER IS LOCATED ON A LOT OF AT LEAST 3 ACRES.

10. PER SECTION 426.10, APPLICANT IS AWARE OF THE CONDITIONS ENABLING THE CODE OFFICIAL TO REMOVE A TOWER.

11. PER SECTION 426.11, NO VARIANCE IS REQUESTED FOR THE TOWER.

12. PER SECTION 502.1, THE PROPOSED TOWER WILL BE UNMANNED. IT WILL GENERATE APPROXIMATELY TWO TRIPS PER MONTH FOR MAINTENANCE PURPOSES. APPLICANT WILL COMPLY WITH ALL FEDERAL REQUIREMENTS REGARDING RF EMISSIONS AS A CONDITION OF MAINTAINING ITS LICENSE TO OPERATE. THE ANTENNAS WILL BENEFIT THE SUBSCRIBING PUBLIC BY ENABLING CONTINUOUS TELECOMMUNICATIONS SERVICES FOR PERSONNAL, BUSINESS AND EMERGENCY PURPOSES. THE PROPOSED TOWER WILL NOT:

A. BE DETRIMENTAL TO THE HEALTH, SAFETY OR GENERAL WELFARE OF THE LOCALITY.
B. TEND TO CREATE CONGESTION IN ROADS, STREET OR ALLEYS THEREIN;
C. CREATE A POTENTIAL HAZARD FROM FIRE, PANIC OR OTHER DANGER;
D. INTERFERE WITH ADEQUATE PROVISIONS FOR SCHOOLS, PARKS, WATER, SEWERAGE, TRANSPORATION OR OTHER PUBLIC REQUIREMENTS, CONVENIENCES OR IMPROVEMENTS;
E. INTERFERE WITH ADEQUATE LIGHT AND AIR
F. BE INCONSISTENT WITH THE PURPOSES OF THE PROPERTY'S ZONING CLASSIFICATION NO IN ANY OTHER WAY INCONSISTENT WITH THE SPIRIT AND INTENT OF THE ZONING REGULATIONS; NOR
G. BE INCONSISTENT WITH THE IMPERMEABLE SURFACE AND VEGETATIVE RETENTION PROVISIONS OF THE ZONING REGULATIONS.

SPECIAL EXCEPTION AREA PLAN
SCALE: 1" = 80'-0"

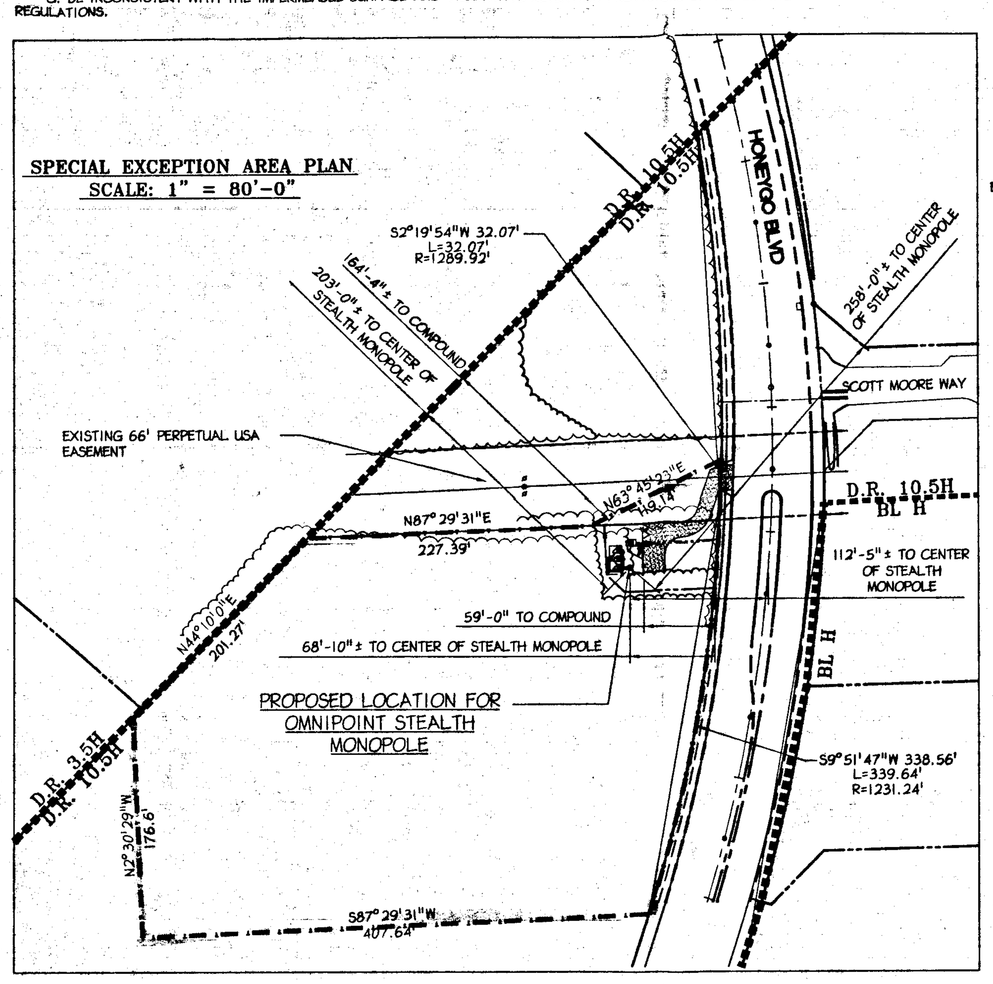

1 LS-1 ZONING PLAN
SCALE: 1" = 150'-0"

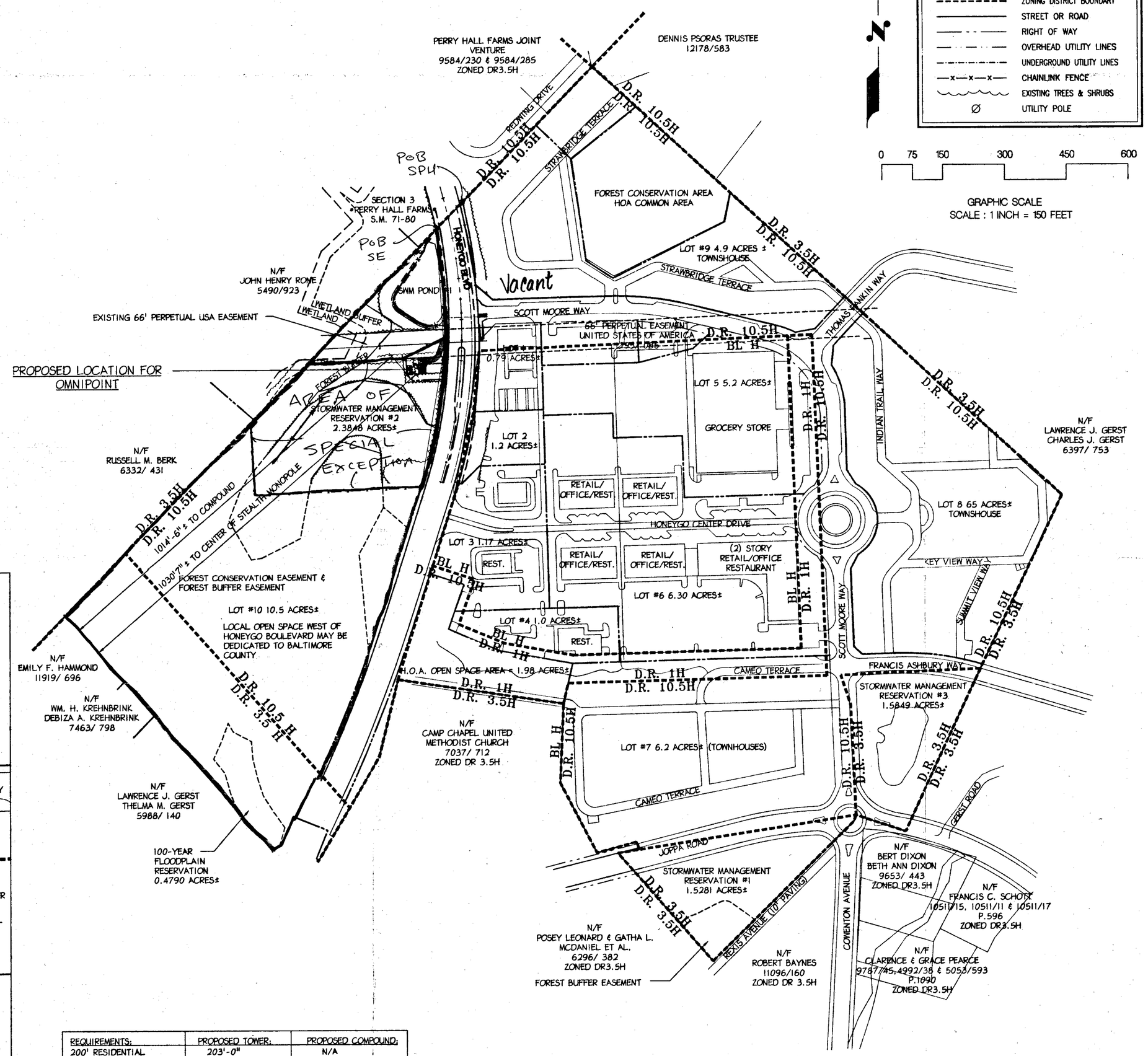

REQUIREMENTS:	PROPOSED TOWER:	PROPOSED COMPOUND:
200' RESIDENTIAL	203'-0"	N/A
FRONT 25'	68'-10"	58'-0"
SIDE 20'	1030'-7"	1014'-6"
CORNER STREET SIDE 35'	68'-10"	58'-0"
REAR 50'	203'-0"	164'-4"

SITE LEGEND

- SITE PROPERTY LINE
- SPECIAL EXCEPTION
- ZONING DISTRICT BOUNDARY
- STREET OR ROAD
- RIGHT OF WAY
- OVERHEAD UTILITY LINES
- UNDERGROUND UTILITY LINES
- CHAINLINK FENCE
- EXISTING TREES & SHRUBS
- UTILITY POLE

0 75 150 300 450 600
GRAPHIC SCALE
SCALE : 1 INCH = 150 FEET

Betzwood Associates PC
Architects & Engineers
Robin J. Kohn, AIA — Regis W. Kubit, PE
523 Kimberton Road, Suite 118 Phoenixville, PA 19460
tel. (610) 917-8831 fax (610) 917-8836
email mail@betzwood.com http://www.betzwood.com

SEAL BLOCK

I CERTIFY THAT THESE DOCUMENTS WERE PREPARED OR APPROVED BY ME, AND THAT I AM A DULY LICENSED ARCHITECT UNDER THE LAWS OF THE STATE OF MARYLAND.

BOARD OF ARCHITECTS 9374 ROBIN J. KOHN STATE OF MARYLAND

ROBIN J. KOHN AIA – MD. #9374 01.19.06

OMNIPOINT COMMUNICATIONS
CAP OPERATIONS, LLC
a subsidiary of T-MOBILE-USA., INCORPORATED
fka VOICESTREAM WIRELESS CORPORATION

12050 BALTIMORE AVENUE·BELTSVILLE, MD 20705
Tel. (240) 264-8600 FAX (240) 264-8610

APPROVALS
Omnipoint
LANDLORD
LEASING
R.F.
ZONING
CONSTRUCTION

NOTE

This Document is the Creation, Design, Property and Copyrighted Work of Omnipoint Communications Cap Operations, LLP a Subsidiary of T-Mobile USA, Inc., fka Voicestream Wireless. Any Duplication or use Without Express Written Consent is Strictly Prohibited.

PROJECT NO.	DRAWN BY	CHECK BY
OP-414	CMB	RJK

SUBMITTALS

NO.	DATE	ISSUE
0	10/01/02	TTV VISIT
1	10/11/02	ISSUED FOR ZONING REVIEW
2	10/16/02	ISSUED FOR ZONING
3	03/12/03	MINOR REVISIONS
4	03/25/03	MINOR REVISIONS
5		
6		

PLAN TO ACCOMPANY
DRC REQUEST AND
SPECIAL EXCEPTION PETITION

GRAPHIC SCALE AND SPECIAL HEARING
0 1 2

PROJECT
HONEYGO VILLAGE CENTER (aka CRESWELL PROPERTY)
SITE #BAN-254D
PROPOSED STEALTH DESIGN MONOPOLE @
HONEYGO VILLAGE CENTER (aka CRESWELL PROPERTY)
9380 HONEYGO BOULEVARD
BALTIMORE, MARYLAND 21128
BALTIMORE COUNTY
DISTRICT #11 ACCT. #1103067500

SHEET TITLE Council manic - 5

ZONING PLAN
AND NOTES

SHEET NUMBER

LS-1

STEALTH DESIGN MONOPOLE @ HONEYGO VILLAGE CENTER (aka CRESWELL PROPERTY) SITE #BAN-254D

Pet 3B

SITE GENERAL NOTES

1. ALL EXISTING BUILDINGS, WATERCOURSES, MARSHES, ROCK OUTCROPS, WOODED AREAS, SINGLE TREES LARGER THAN 8" IN DIA. AT THREE FEET ABOVE GROUND LEVEL AND ALL OTHER SIGNIFICANT FEATURES HAVE BEEN SHOWN WITHIN THE LIMITS OF DISTURBANCE UNDERGROUND IMPROVEMETNS, IF ANY, & NOT VISIBLE OR MARKED BY "ONE CALL" ARE NOT SHOWN.
2. THE PROPOSED DEVELOPMENT IS UNMANNED AND THEREFORE DOES NOT REQUIRE A MEANS OF WATER SUPPLY OR SEWAGE DISPOSAL.
3. THE PROPOSED DEVELOPMENT WILL NOT IMPACT THE EXISTING STORM WATER DRAINAGE SYSTEM.
4. THE PROPOSED DEVELOPMENT DOES NOT INCLUDE SIGNS OF ADVERTISING.
5. THE PROPOSED DEVELOPMENT DOES NOT INCLUDE OUTDOOR STORAGE OR ANY SOLID WASTE RECEPTACLES.
6. NO LANDSCAPING WORK IS PROPOSED IN CONJUNCTION WITH THIS DEVELOPMENT OTHER THAN THAT SHOWN.
7. A COMPLETE BOUNDARY SURVEY OF THE HOST PARCEL HAS NOT BEEN PERFORMED BY BETZWOOD ASSOCIATES.
8. THERE IS NO GRADING WHICH SLOPES GREATER THAN 5% IN THE PROPOSED AREA OF DISTURBANCE
9. THE INCREASE IN STORM WATER RUNOFF DUE TO THE INCREASE IN IMPERVIOUS AREA IS INSIGNIFICANT. EXISTING DRAINAGE PATTERNS WILL NOT BE ALTERED. THEREFORE, DRAINAGE STRUCTURES ARE NOT PROPOSED.
10. THERE IS ONE OFF-STREET PARKING SPACE PROPOSED WITH THIS APPLICATION.
11. ALL CONSTRUCTION FOR SITE IMPROVEMENTS SHALL CONFORM TO APPLICABLE SPECIFICATIONS, STANDARDS AND REQUIREMENTS OF THE GOVERNMENTAL OR UTILITY AUTHORITY HAVING JURISDICTION.
12. EXISTING ON-SITE VEGETATION SHALL BE PRESERVED TO THE MAXIMUM EXTENT.
13. ALL INFORMATION ON THIS PLAN IS NOT TO BE USED FOR BOUNDARY, TITLE OR CONSTRUCTION PURPOSES.
14. BOUNDARY INFORMATION WAS OBTAINED FROM DRAWINGS PREPARED BY MORRIS & RITCHIE ASSOCIATES, INC., FINAL PLAT ONE HONEYGO VILLAGE CENTER DATED 9/18/01 & ALTERNATE DEVELOPMENT PLAN DATED 11/06/02.
15. UTILITIES SHOWN ON PLAN ARE TAKEN FROM OWNERS RECORDS AND FIELD LOCATION OF VISIBLE SURFACE FEATURES. THE EXISTENCE, EXTENT AND EXACT HORIZONTAL AND VERTICAL LOCATIONS OF UTILITIES HAS NOT BEEN VERIFIED. ANY CONTRACTOR PERFORMING WORK ON THIS SITE MUST CONTACT MD ONE CALL UTILITY AT LEAST 48 HOURS PRIOR TO COMMENCING WORK.
16. PROPOSED TOWER DEVELOPEMENT IS UNMANNED AND THEREFORE DOES NOT GENERATE TRAFFIC OF SIGNIFICANCE (ON AVERAGE ONE-TWO VEHICLE PER MONTH WILL VISIT FACILITY FOR MAINTENENCE).

SITE GENERAL NOTES

1. EXISTING ZONING = DR 10.5 (DENSITY - RESIDENTAL)
2. EXISTING USE = SHOPPING CENTER / MIXED USE RESIDENTAL
3. TOTAL AREA OF PARCEL =54.007± ACRES, 236254.92 SQ. FT.
4. TOTAL DISTURBED AREA = 2.375± SQUARE FEET, TOTAL LEASE AREA: 1200 SQUARE FEET.
5. TO REMAIN SHOPPING CENTER MAINTENANCE
6. THE PROPERTY SHOWN HEREON IS OWNED BY: RITA LIMITED PARTNERSHIP, BY DEED RECORDED AMONG THE LAND RECORDS OF BALTIMORE COUNTY IN LIBER 12293, FOLIO 445
7. TAX MAP: 72, GRID: 11 PARCEL: 78, GROUP: 82
8. TOPOGRAPHY SHOWN HERON IS DEPICTED FROM A PLAN BY MORRIS & RITCHE ASSOCIATES, INC. DATED 11/06/02 FINAL PLAT ONE HONEYGO VILLAGE CENTER.
9. THE CONTRACTOR SHALL NOTE THAT IN CASE OF A DISCREPANCY BETWEEN THE SCALED AND FIGURED DIMENSIONS SHOWN ON THESE PLANS, THE FIGURED DIMENSIONS SHALL GOVERN.
10. PROPOSED DEVELEPMENT IS NOT LOCATED WITHIN THE CRITICAL AREA OF THE CHESAPEAKE BAY AND FLOODPLAIN.

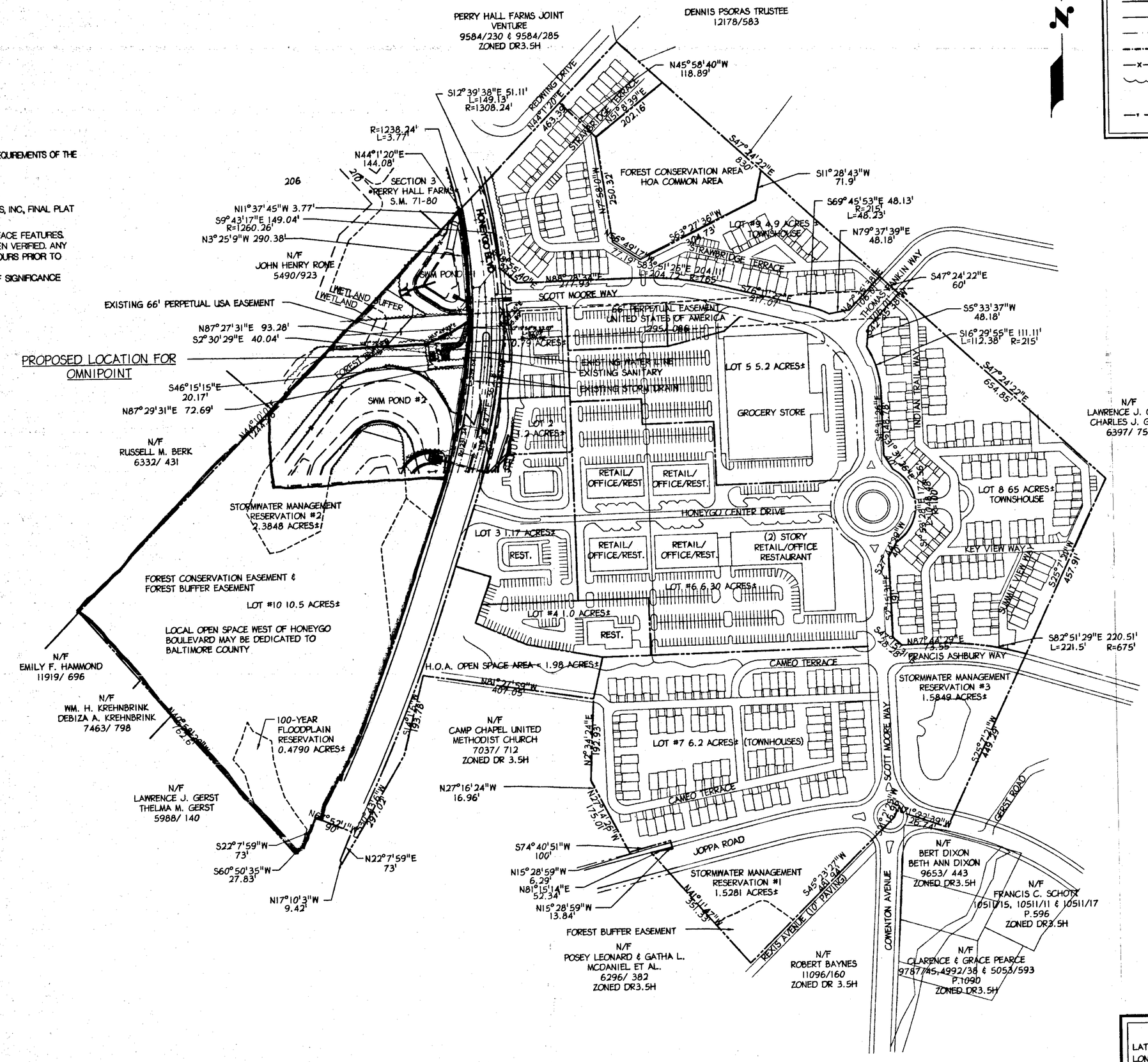

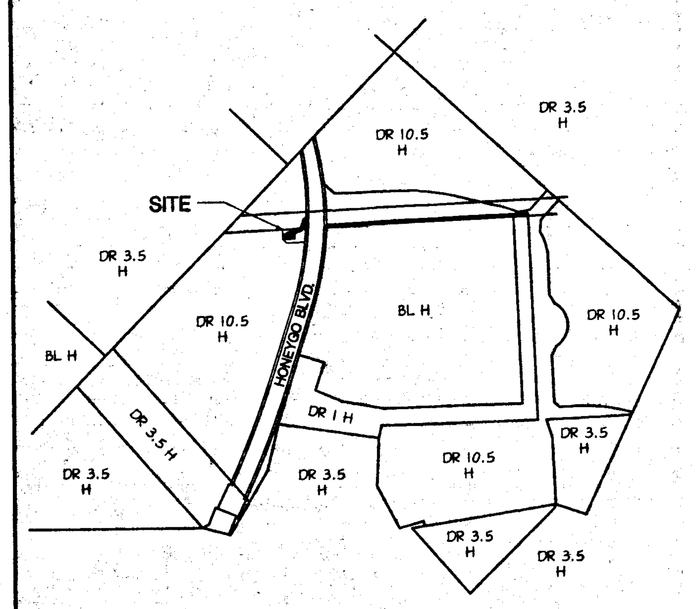

VICINITY MAP 1" = 400'-0"

1 LS-2 **SITE PLAN**
SCALE: 1" = 150'-0"

SITE LEGEND

- SITE PROPERTY LINE
- BUILDING SETBACKS
- DRAINAGE OR ACCESS EASEMENT
- STREET OR ROAD
- RIGHT OF WAY
- OVERHEAD UTILITY LINES
- UNDERGROUND UTILITY LINES
- CHAINLINK FENCE
- EXISTING TREES & SHRUBS
- UTILITY POLE
- SPECIAL EXCEPTION

SITE DATA

LATITUDE ..... N 39°-24'-21.7" (USGS)
LONGITUDE ..... W 77°-26'-41.4" (USGS)
USGS MAP ..... WHITE MARSH, MD.
PROPERTY OWNER:
RITA LIMITED PARTNERSHIP
4750 OWINGS MILLS BOULEVARD
OWINGS MILLS, MD 21117
DEED REF.: 12293/ 445
TAX MAP ACCT. #
MAP: 72; GRID: 11; PARCEL: 78; GROUP: 82
BALTIMORE COUNTY
DISTRICT #11, ACCT. #1103067500
ZONING: DR 10.5

Betzwood Associates PC
Architects & Engineers
Robin J. Kohn, AIA — Regis W. Kubit, PE
523 Kimberton Road, Suite 11B Phoenixville, PA 19460
tel. (610) 917-8831 fax (610) 917-8836
email mail@betzwood.com http://www.betzwood.com

SEAL BLOCK

I CERTIFY THAT THESE DOCUMENTS WERE PREPARED OR APPROVED BY ME, AND THAT I AM A DULY LICENSED ARCHITECT UNDER THE LAWS OF THE STATE OF MARYLAND.

BOARD OF ARCHITECTS 9374 ROBIN J. KOHN STATE OF MARYLAND

ROBIN J. KOHN AIA – MD. #9374 01.19.05

OMNIPOINT COMMUNICATIONS CAP OPERATIONS, LLC
a subsidiary of T-MOBILE USA, INCORPORATED
fka VOICESTREAM WIRELESS CORPORATION

12050 BALTIMORE AVENUE BELTSVILLE, MD 20705
Tel. (240) 264-8600 FAX (240) 264-8610

APPROVALS
Omnipoint
LANDLORD
LEASING
R.F.
ZONING
CONSTRUCTION

NOTE

This Document is the Creation, Design, Property and Copyrighted Work of Omnipoint Communications Cap Operations, LLP a Subsidiary of T-Mobile USA, Inc., fka Voicestream Wireless. Any Duplication or use Without Express Written Consent is Strictly Prohibited.

PROJECT NO.	DRAWN BY	CHECK BY
OP-414	CMB	RJK

SUBMITTALS

NO.	DATE	ISSUE
0	10/01/02	TTV VISIT
1	10/11/02	ISSUED FOR ZONING REVIEW
2	10/16/02	ISSUED FOR ZONING
3	03/12/03	MINOR REVISIONS
4	03/25/03	MINOR REVISIONS
5		
6		

PLAN TO ACCOMPANY DRC REQUEST AND SPECIAL EXCEPTION PETITION ~~AND SPECIAL HEARING~~

GRAPHIC SCALE 0 1 2

PROJECT
HONEYGO VILLAGE CENTER (aka CRESWELL PROPERTY)
SITE #BAN-254D
PROPOSED STEALTH DESIGN MONOPOLE @
HONEYGO VILLAGE CENTER (aka CRESWELL PROPERTY)
9380 HONEYGO BOULEVARD
BALTIMORE, MARYLAND 21128
BALTIMORE COUNTY
DISTRICT #11 ACCT. #1103067500

SHEET TITLE Councilmanic- 5

ZONING PLAN

SHEET NUMBER

LS-2

PROPOSED STEALTH DESIGN MONOPOLE HONEYGO VILLAGE CENTER (aka CRESWELL PROPERTY) SITE #BAN-254D

Not 3c

STRUCTURAL, GENERAL & SITE NOTES

1. THE GENERAL CONTRACTOR AND OR HIS SUB-CONSULTANT SHALL BE RESPONSIBLE FOR OBTAINING ALL PERMITS AND INSPECTION WHICH MAY BE REQUIRED FOR THE WORK BY THE ARCHITECT/ ENGINEER, THE STATE, COUNTY OR LOCAL GOVERNMENT AUTHORITY.
2. DESIGN REQUIREMENTS FOR THE ANTENNA SUPPORTING STRUCTURES ARE PER 2000 IBC – STRUCTURAL WIND LOAD STANDARDS
3. ALL STRUCTURAL STEEL SHALL BE HOT-DIPPED GALVANIZED AFTER FABRICATION.
4. FACILITY WILL BE INDEPENDENTLY POWERED WITH SEPARATE SERVICE & METER.
5. THE PROPOSED FACILITY IS UNMANNED AND VISITED ONCE TO TWICE A MONTH FOR ROUTINE MAINTENANCE. THEREFORE, POTABLE WATER, GAS & SANITARY SEWER SERVICES ARE NOT REQUIRED OR PROPOSED.
6. OUTDOOR STORAGE AND SOLID WASTE CONTAINERS ARE NOT PROPOSED.
7. APPLICANT PROPOSES AN UNMANNED, MODULAR, RADIO EQUIPMENT CABINETS & ASSOCIATED ANTENNAS MOUNTED TO AN PROPOSED STEALTH DESIGNED MONOPOLE.
8. FACILITY WILL NOT BE LIGHTED WITH EXCEPTION OF EMERGENCY CONDITIONS. A SINGLE SWITCHED LIGHT LOCATED NEAR EQUIPMENT
9. ANTENNA INSTALLATION SHALL BE CONDUCTED BY FIELD CREWS EXPERIENCED IN THE ASSEMBLY & ERECTION OF RADIO ANTENNAS, TRANSMISSION LINES & SUPPORT STRUCTURES.
10. STRUCTURAL STEEL SHALL CONFORM TO LATEST EDITION OF THE AISC SPECIFICATIONS FOR STRUCTURAL STEEL BUILDINGS – ALLOWABLE STRESS DESIGN AND PLASTIC DESIGN INCLUDING THE COMMENTARY AND THE CODE OF STANDARD PRACTICE.
11. STRUCTURAL STEEL PLATES AND SHAPES SHALL CONFORM TO ASTM A36. ALL STRUCTURAL STEEL PIPES SHALL CONFORM TO ASTM A53 GRADE 'B'. ALL STRUCTURAL STEEL COMPONENTS AND FABRICATED ASSEMBLIES SHALL BE HOT-DIPPED GALVANIZED AFTER FABRICATION.
12. WELDING SHALL BE IN ACCORDANCE WITH THE AMERICAN WELDING SOCIETY (AWS) D.1.1-92 STRUCTURAL WELDING CODE – STEEL WELD ELECTRODES SHALL BE E70XX.
13. ALL THREADED STRUCTURAL FASTENERS FOR ANTENNA SUPPORT ASSEMBLIES SHALL CONFORM TO ASTM A325. FASTENERS SHALL BE 5/8"ø MINIMUM BEARING TYPE CONNECTIONS WITH THREADS INCLUDED IN THE SHEAR PLANE. ALL EXPOSED FASTENERS, NUTS AND WASHERS SHALL BE GALVANIZED UNLESS OTHERWISE NOTED.
14. ALL COAXIAL CABLE CONNECTIONS AND TRANSMITTER EQUIPMENT SHALL BE AS SPECIFIED BY THE OWNER. THE CONTRACTOR SHALL FURNISH ALL CONNECTION HARDWARE REQUIRED TO SECURE THE CABLES.

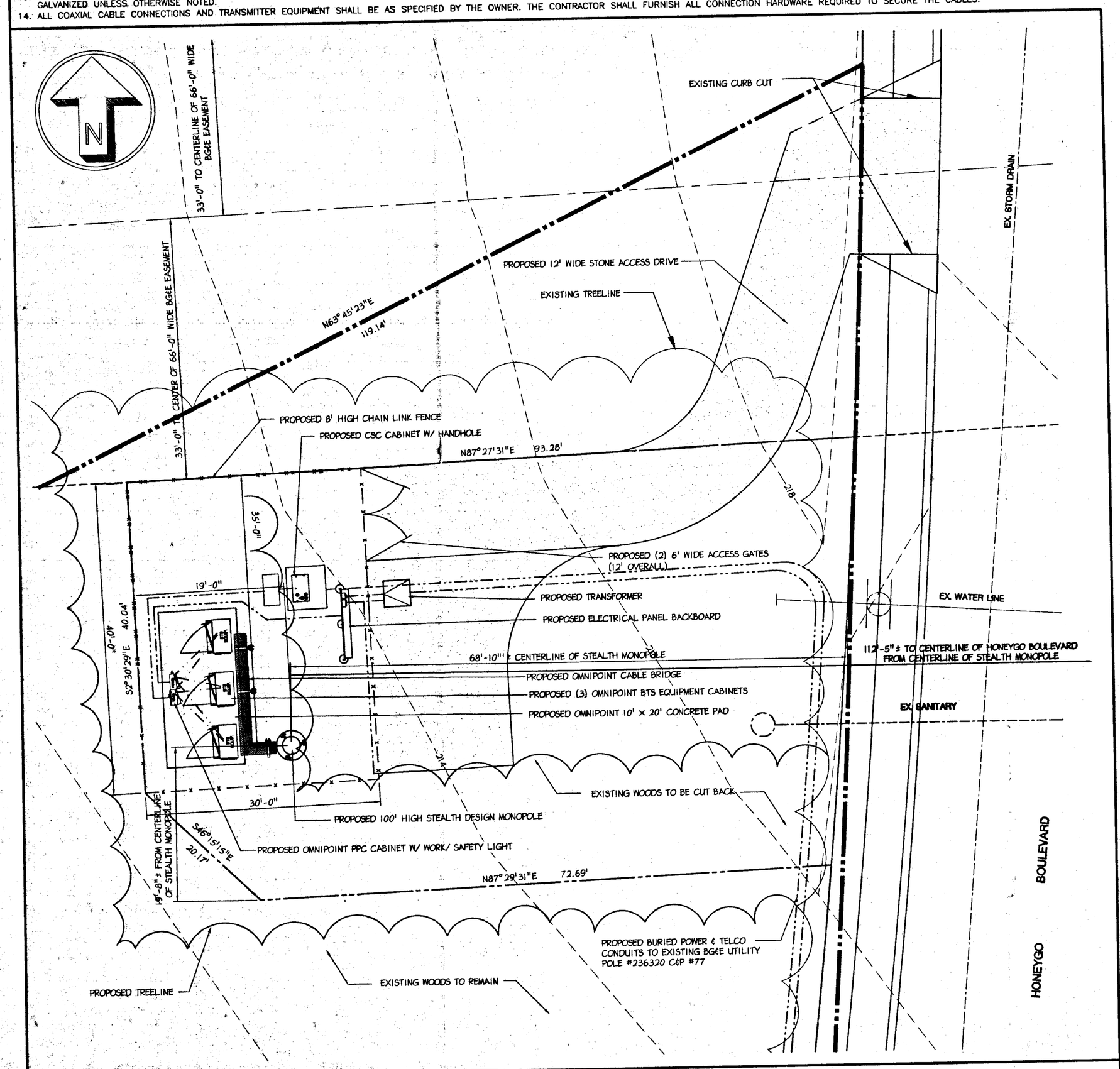

1 S-1 ENLARGED COMPOUND PLAN
SCALE: 1/8" = 1'-0"

GENERAL STRUCTURAL NOTES:

1. SPECIFICATIONS / CODES
   CONCRETE WORK SHALL BE PERFORMED IN ACCORDANCE WITH LATEST EDITION OF THE ACI CODE. STEEL WORK SHALL BE PERFORMED IN ACCORDANCE WITH AISC STEEL CONSTRUCTION MANUAL, 9th EDITION. WELDING SHALL BE PERFORMED IN ACCORDANCE WITH AMERICAN WELDING SOCIETY (AWS) D11-92 "STRUCTURAL WELDING CODE-STEEL. REINFORCING STEEL SHALL BE PLACED IN ACCORDANCE WITH THE CONCRETE REINFORCING STEEL INSTITUTE (CRSI), "MANUAL OF STANDARD PRACTICE".
2. MATERIALS
   CONCRETE: fc = 3000 PSI
   REINFORCING STEEL: ASTM A615, GRADE 60.
   WIRE MESH: ASTM A 185
   STRUCTURAL STEEL: ASTM A 36
   ELECTRODES FOR WELDING: E 70xx
   GALVANIZING: ASTM A 153
   EXPANSION BOLTS: HILTI KWIK BOLT II, STAINLESS STEEL, 3/4" EMBEDMENT, OR AN APPROVED EQUAL.
3. GEOTECHNICAL:
   CONCRETE SLAB DESIGN IS BASED ON 2000 PSF SOIL BEARING CAPACITY. IF OTHER CONDITIONS EXIST, FOUNDATION SHALL BE REDESIGNED. CONTRACTOR SHALL HAVE SOIL BEARING CAPACITY VERIFIED BY A LICENSED PROFESSIONAL GEOTECHNICAL ENGINEER PRIOR TO INITIATION OF CONSTRUCTION ACTIVITIES.
   DL = 8,100 LBS.
   LL = 100 PSF.

   ALL BACKFILL SHALL BE THOROUGHLY COMPACTED TO A MINIMUM OF 95% MODIFIED PROCTOR DENSITY.

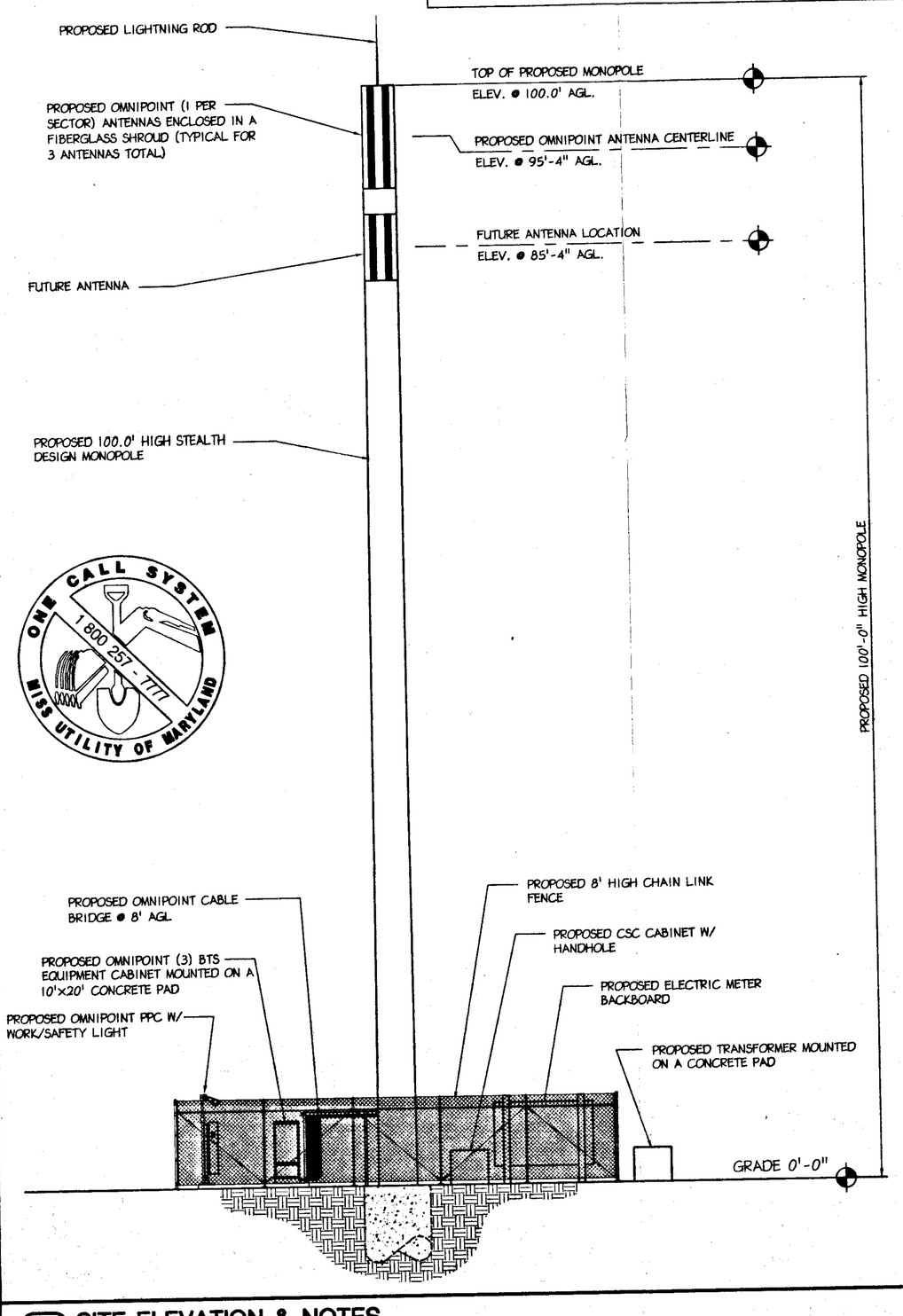

2 S-1 SITE ELEVATION & NOTES
SCALE: 1/8" = 1'-0"

Betzwood Associates PC
Architects & Engineers
Robin J. Kohn, AIA — Regis W. Kubik, PE
523 Kimberton Road, Suite 11B Phoenixville, PA 19460
tel. (610) 917-8831 fax (610) 917-8836
email mail@betzwood.com http://www.betzwood.com

SEAL BLOCK

I CERTIFY THAT THESE DOCUMENTS WERE PREPARED OR APPROVED BY ME, AND THAT I AM A DULY LICENSED ARCHITECT UNDER THE LAWS OF THE STATE OF MARYLAND.

BOARD OF ARCHITECTS 9374 STATE OF MARYLAND

ROBIN J. KOHN AIA – MD. #9374 01.19.06

OMNIPOINT COMMUNICATIONS CAP OPERATIONS, LLC
a subsidiary of T-MOBILE USA, INCORPORATED
fka VOICESTREAM WIRELESS CORPORATION

12050 BALTIMORE AVENUE BELTSVILLE, MD 20705
Tel. (240) 264-8600 FAX (240) 264-8610

APPROVALS
Omnipoint
LANDLORD
LEASING
R.F.
ZONING
CONSTRUCTION

NOTE

This Document is the Creation, Design, Property and Copyrighted Work of Omnipoint Communications Cap Operations, LLP a Subsidiary of T-Mobile USA, Inc., fka Voicestream Wireless. Any Duplication or use Without Express Written Consent is Strictly Prohibited.

PROJECT NO.	DRAWN BY	CHECK BY
OP-414	CMB	RJK

@ HONEYGO VILLAGE CENTER (aka CRESWELL PROPERTY)

SUBMITTALS

NO.	DATE	ISSUE
0	10/01/02	TTV VISIT
1	10/11/02	ISSUED FOR ZONING REVIEW
2	10/16/02	ISSUED FOR ZONING
3	03/12/03	MINOR REVISIONS
4	03/25/03	MINOR REVISIONS
5		
6		

PLAN TO ACCOMPANY DRC REQUEST AND SPECIAL EXCEPTION PETITION
~~AND SPECIAL HEARING~~

GRAPHIC SCALE
0 1 2

PROJECT
HONEYGO VILLAGE CENTER (aka CRESWELL PROPERTY)
SITE #BAN-254D
PROPOSED STEALTH DESIGN MONOPOLE
PROPOSED 100.0' HIGH MONOPOLE
9380 HONEYGO BOULEVARD
BALTIMORE, MARYLAND 21128
BALTIMORE COUNTY
DISTRICT #11 ACCT. #1103067500

SHEET TITLE Councilmanic - 5
ENLARGED SITE PLAN AND ELEVATION

SHEET NUMBER
Z-1

PROPOSED STEALTH DESIGN MONOPOLE @ HONEYGO VILLAGE CENTER (aka CRESWELL PROPERTY) SITE #BAN-254D

Rt 3D

OMNIPOINT COMMUNICATIONS
CAP OPERATIONS, LLC

a subsidiary of T-MOBILE USA., INCORPORATED,

fka VOICESTREAM WIRELESS CORPORATION

STEALTH DESIGN MONOPOLE @ HONEYGO VILLAGE CENTER (aka CRESWELL PROPERTY)

9380 HONEYGO BOULEVARD
BALTIMORE, MARYLAND 21128

SITE #BAN-254D

PROPOSED TELECOMMUNICATIONS FACILITY

LEGEND

ADJ	ADJUSTABLE	MIN	MINIMUM	A-1	ANTENNA MARK NUMBER
AGL	ABOVE GROUND LEVEL	MTL	METAL	(E)	EXISTING
AMSL	ABOVE MEAN SEA LEVEL	NIC	NOT IN CONTRACT	(N)	NEW
ANT	ANTENNA	NTS	NOT TO SCALE	(P)	PROPOSED
APPROX	APPROXIMATE	OC	ON CENTER	℄	CENTERLINE
AZI	AZIMUTH	OHP	OVERHEAD POWER	ℙ	PLATE
BTS	BASE TRANSMISSION STATION	OHT	OVERHEAD TELCO	B/W	BARBED WIRE
CAB	CABINET	PCS	PERSONAL COMMUNICATIONS SERVICES	C/L	CHAINLINK
CONC	CONCRETE			ø	DIAMETER
CONT	CONTINUOUS	PWR	POWER	W/	WITH
CONST	CONSTRUCTION	SF	SQUARE FOOT		
COAX	COAXIAL	SHT	SHEET		
CJ	CONSTRUCTION JOINT	SIM	SIMILAR		
DIA	DIAMETER	SS	STAINLESS STEEL		
DTL	DETAIL	STL	STEEL		
DWG	DRAWING	TELCO	TELEPHONE COMPANY		
EA	EACH	TO	TOP OF		
ELEC	ELECTRIC	TYP	TYPICAL		
ELEV	ELEVATION	VIF	VERIFY IN FIELD		
EQ	EQUAL	UON	UNLESS OTHERWISE NOTED		
EQUIP	EQUIPMENT	USGS	U.S. GEOLOGICAL SURVEY		
EXT	EXTERIOR	WWF	WELDED WIRE FABRIC		
FF	FINISH FLOOR				
FTG	FOOTING				
GA	GAUGE				
GALV	GALVANIZED				
GC	GENERAL CONTRACTOR				
GRND	GROUND				
INT	INTERIOR				
LG	LONG				
MAX	MAXIMUM				
MFG	MANUFACTURER				

SECTION NUMBER / SHEET NUMBER (2 / S-1) — DRAWING SECTION

SECTION NUMBER / SHEET NUMBER (4 / S-1) — DETAIL

SECTION NUMBER / SHEET NO. (5 / E-1) — DETAIL ENLARGEMENT

REVISION NUMBER (2)

DATUM ELEVATION

MATCH LINE

(TB) TEST BORING
(WP) WORK POINT
(DP) DATUM POINT

CAST IN PLACE OR PRE-CAST CONCRETE

LIGHT WEIGHT CONCRETE

EARTH: UNDISTURBED

EARTH: BACKFILL

CRUSHED STONE, GRAVEL OR POROUS FILL

PLASTER CEMENT, SAND, GROUT

ROCK OR STONE

RIGID INSULATION

STEEL

METAL ALUMINUM, ECT.

CONCRETE MASONRY UNIT

BRICK

DRAWING INDEX

T-1 TITLE SHEET
LS-1 ZONING PLAN AND NOTES
LS-2 ZONING PLAN AND NOTES
Z-1 ENLARGED COMPOUND PLAN AND SITE ELEVATION

PROJECT DESCRIPTION:

THE PROPOSED WORK WILL CONSISTS OF ATTACHING A ANTENNAS INCLOSED INSIDE A FIBERGLASS SHROUD TO A PROPOSED 100'-0" HIGH STEALTH DESIGNED MONOPOLE TO BE USED AS A MOUNTING FOR (9) PANEL ANTENNAS, EACH 72" x 8" x 2.75". A 10' x 20' CONCRETE PAD WILL BE PLACED AT THE BASE OF THE PROPOSED STEALTH DESIGNED MONOPOLE LOCATED INSIDE A PROPOSED 30' x 40', 8' HIGH CHAIN LINK FENCED COMPOUND TO MOUNT (3) EQUIPMENT CABINETS 4'-3" x 2'-4" x 5'-8" HIGH AND RELATIVE EQUIPMENT. ACCESS TO SITE WILL BE UTILIZATION ON A PROPOSED 12'-0" WIDE STONE DRIVE PER AGREEMENT W/ LAND OWNER.

DRIVING DIRECTIONS:

FROM T-MOBILE OFFICE TAKE US-1 BALTIMORE AVENUE (NORTHEAST) (1.98 MILES). TURN RIGHT ONTO CONTEE RD. (1.13 MILES). TURN RIGHT ONTO MD-197 S/LAUREL BOWIE RD. (1.33 MILES). TURN SHARP LEFT TO TAKE THE B/W PKWY. NORTH RAMP. MERGE ONTO MD-295 N. (15.89 MILES). TAKE THE I-895/HARBOR TUNNEL THRWY EXIT. MERGE ONTO HARBOR TUNNEL THRWY. (10.16 MILES). HARBOR TUNNEL THRWY BECOMES I-95 N. (5.80 MILES). TAKE THE MD-43 E/WHITE MARSH BLVD. EAST EXIT - EXIT #67A - TOWARDS US-40. MERGE ONTO MD-43 E. TAKE THE RAMP TOWARD MD-7/PHILADELPHIA RD. KEEP RIGHT AT THE FORK IN THE RAMP. MERGE ONTO INDUSTRIAL PARK RD. TURN RIGHT ONTO MD-7/PHILADELPHIA RD. STAY STRAIGHT TO GO ONTO MD-7/PHILADELPHIA RD. TURN LEFT ONTO CONENTON AVE. (1.52 MILES). TURN LEFT ONTO E. JOPPA RD.

VICINITY MAP

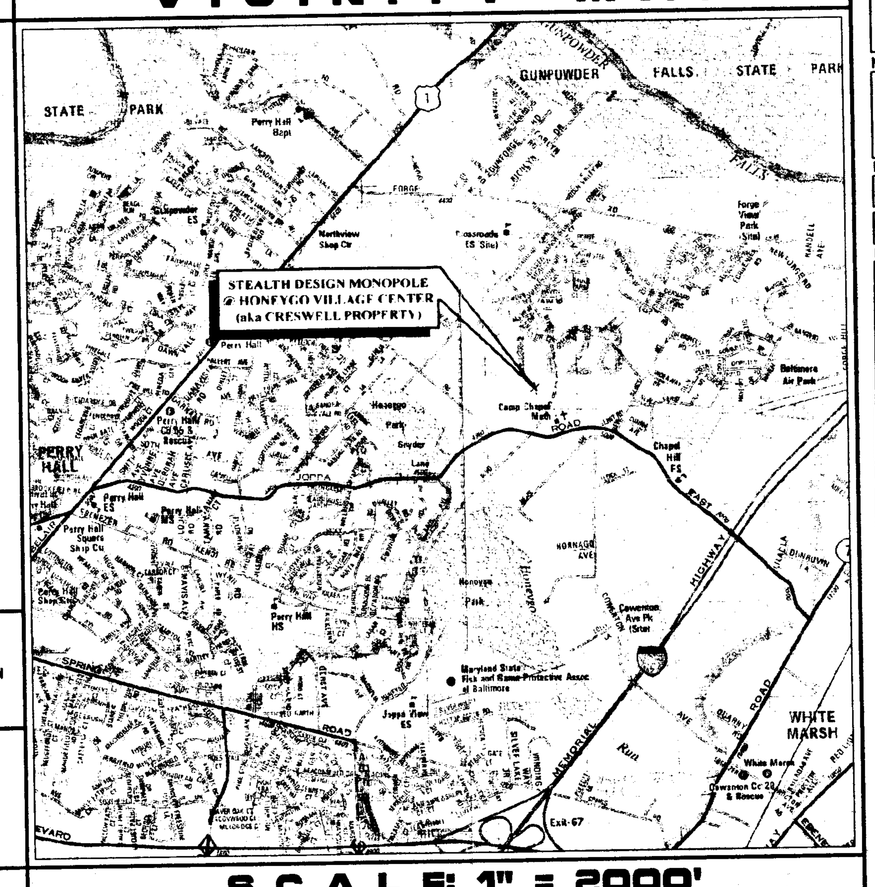

SCALE: 1" = 2000'

PROJECT SUMMARY

SITE NUMBER: #BAN-254D
SITE NAME: HONEYGO VILLAGE CENTER (aka CRESWELL PROPERTY)
SITE ADDRESS: 9380 HONEYGO BOULEVARD BALTIMORE, MARYLAND 21128
TAX NUMBER: MAP #72 GRID #11 PARCEL #78 GROUP #82
DEED BOOK REF: 12293/ 445
CURRENT ZONING: DR 10.5
JURISDICTION: BALTIMORE COUNTY DISTRICT II ACCOUNT 1103067500

PROPERTY OWNER: RITA LIMITED PARTNERSHIP
4750 OWINGS MILLS BOULEVARD
OWINGS MILLS, MARYLAND 21117

CONTACT PERSON: SCOTT ROUCK
(410) 581-9405 x 252

APPLICANT: OMNIPOINT COMMUNICATIONS CAP OPERATIONS, LLC
a subsidairy of T-MOBILE USA INCORPORATED
fka VOICESTREAM WIRELESS CORPORATION
12050 BALTIMORE AVENUE
BELTSVILLE MARYLAND 20705
CONTACT: TELE: 240-264-8600

SITE DATA:
LATITUDE: N 39-24'-21.7" (USGS)
LONGITUDE: W 77-26'-41.4" (USGS)
ELEVATION: 210'± AMSL @ BASE
USGS MAP: WHITE MARSH, MARYLAND
REF. MAP: BALTIMORE COUNTY
PAGE: MAP #29
GRID: G-5

ZONING HISTORY: PDM XI-843
ALTERNATE DEVELOPMENT PLAN DRC 070802G
DRC 070802G
DRC 080700I

T.T.V. PARTICIPANTS:

TTV REP:	NAME	COMPANY	TEL. NO.
R.F. ENG.	D. LORA	T-MOBILE	
A & E REP.	J. CLAUSEN	BTZWD.	610-917-8831
S.A.Q. REP.	K. LARKIN	T-MOBILE	
CONST. REP.	B. BAYS	T-MOBILE	
ZONING REP.	H. MORRISON	T-MOBILE	
OWNER REP.			
OTHER			

BTS TYPE: ERICSSON RBS 2102 CDU-A

Betzwood Associates PC
Architects & Engineers
Robin J. Kohn, AIA — Roger W. Kubik, PE
523 Kimberton Road, Suite 118 Phoenixville, PA 19460
tel. (610) 917-8831 fax (610) 917-8836
email mail@betzwood.com http://www.betzwood.com

SEAL BLOCK

I CERTIFY THAT THESE DOCUMENTS WERE PREPARED OR APPROVED BY ME, AND THAT I AM A DULY LICENSED ARCHITECT UNDER THE LAWS OF THE STATE OF MARYLAND.

BOARD OF ARCHITECTS 9374 ROBIN J. KOHN STATE OF MARYLAND

ROBIN J. KOHN AIA - MD. #9374 01.19.05

OMNIPOINT COMMUNICATIONS CAP OPERATIONS, LLC
a subsidiary of T-MOBILE USA., INCORPORATED
fka VOICESTREAM WIRELESS CORPORATION
12050 BALTIMORE AVENUE BELTSVILLE, MD 20705
Tel. (240) 264-8600 FAX (240) 264-8610

APPROVALS
Omnipoint
LANDLORD
LEASING
R.F.
ZONING
CONSTRUCTION

NOTE
This Document is the Creation, Design, Property and Copyrighted Work of Omnipoint Communications Cap Operations, LLP a Subsidiary of T-Mobile USA, Inc., fka Voicestream Wireless. Any Duplication or use Without Express Written Consent is Strictly Prohibited.

PROJECT NO.	DRAWN BY	CHECK BY
OP-414	CMB	RJK

SUBMITTALS

NO.	DATE	ISSUE
0	10/01/02	TTV VISIT
1	10/11/02	ISSUED FOR ZONING REVIEW
2	10/16/02	ISSUED FOR ZONING
3	03/12/03	MINOR REVISIONS
4	03/25/03	MINOR REVISIONS
5		
6		

PLAN TO ACCOMPANY DRC REQUEST AND SPECIAL EXCEPTION PETITION AND SPECIAL HEARING

GRAPHIC SCALE 0 1 2

PROJECT
HONEYGO VILLAGE CENTER (aka CRESWELL PROPERTY)
SITE #BAN-254D
PROPOSED STEALTH DESIGN MONOPOLE
@ HONEYGO VILLAGE CENTER (aka CRESWELL PROPERTY)
9380 HONEYGO BOULEVARD
BALTIMORE, MARYLAND 21128
BALTIMORE COUNTY
DISTRICT #11 ACCOUNT #1103067500

SHEET TITLE Council Manic-5

TITLE SHEET

SHEET NUMBER

T-1

STEALTH DESIGN MONOPOLE @ HONEYGO VILLAGE CENTER (aka CRESWELL PROPERTY) SITE #BAN-254D

Ex No 39

CM #454

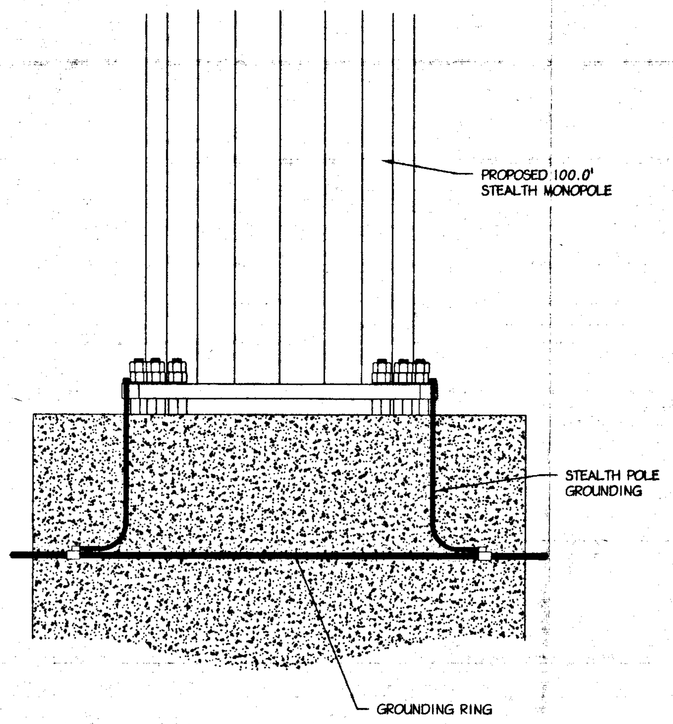

A E-3 MONOPOLE GROUNDING DETAIL
SCALE: Not To Scale

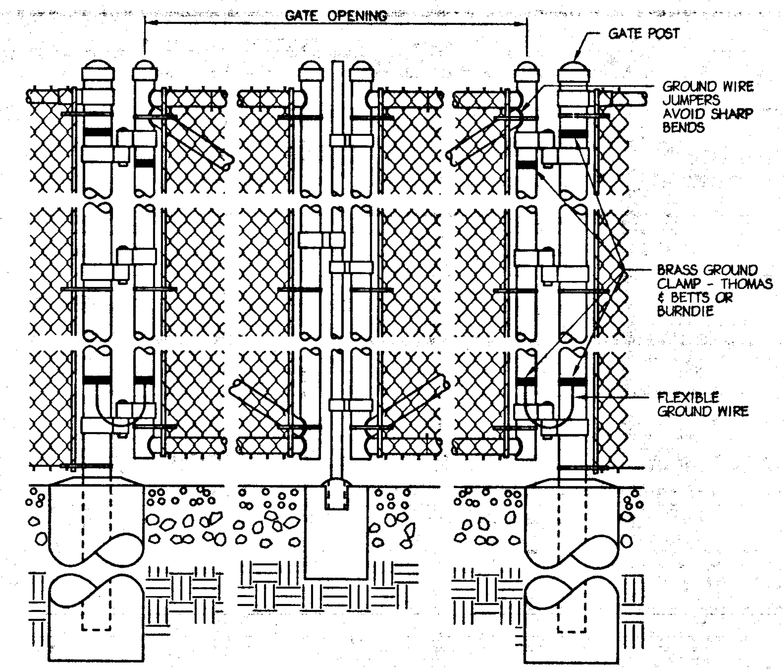

B E-3 GATE GROUNDING DETAIL
SCALE: Not To Scale

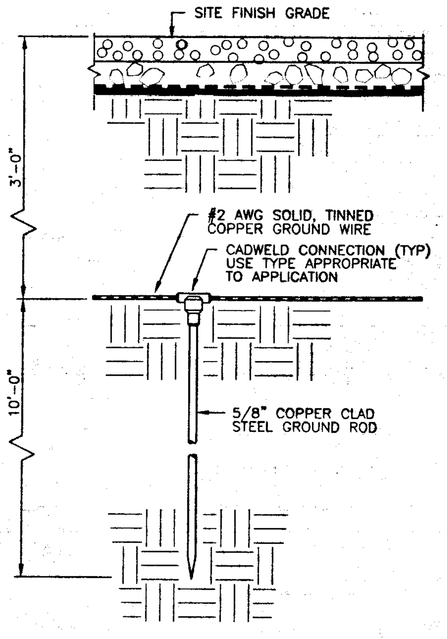

GROUND ROD & RING

C E-3 BURIED - GROUNDING ROD
SCALE: Not To Scale

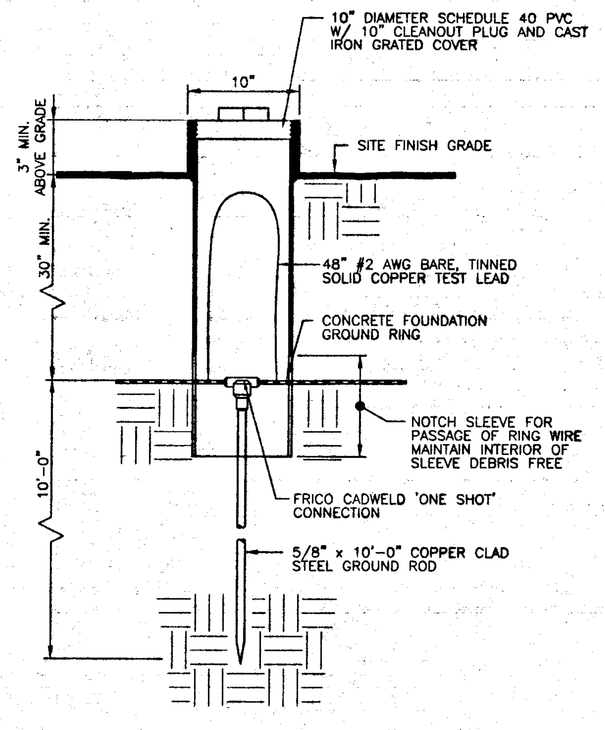

PVC INSPECTION WELL

D E-3 ACCESS - GROUNDING ROD
SCALE: Not To Scale

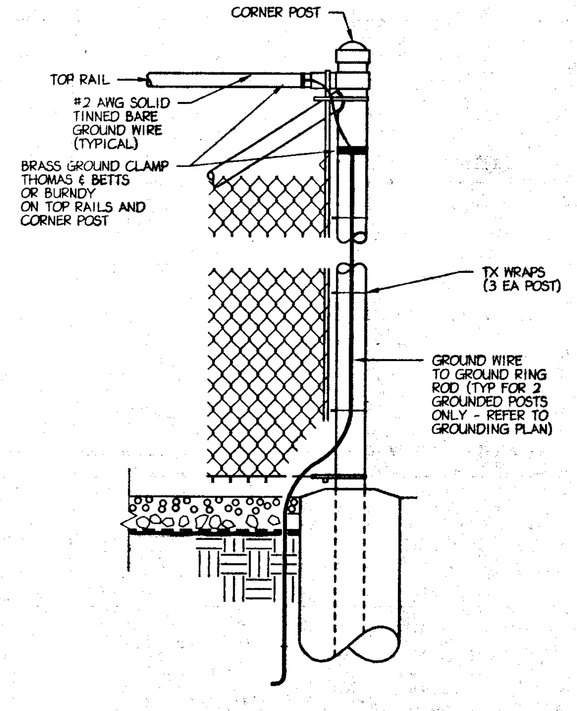

F E-3 GROUNDED CORNER POST DETAIL
SCALE: Not To Scale

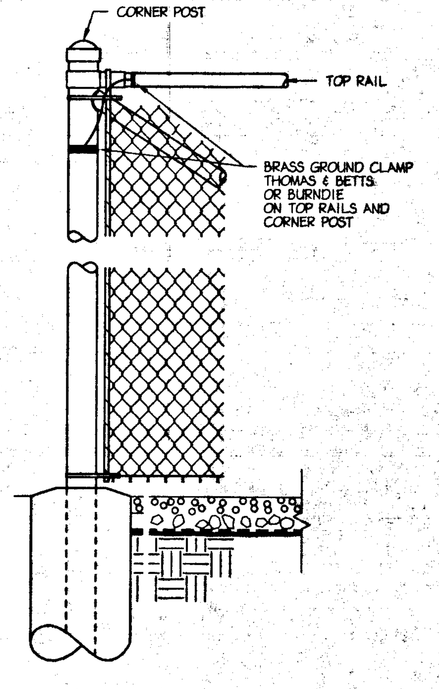

G E-3 CORNER POST DETAIL
SCALE: Not To Scale

Betzwood Associates PC
Architects & Engineers
Robin J. Kohn, AIA — Regis W. Kubik, PE
523 Kimberton Road, Suite 118 Phoenixville, PA 19460
tel. (610) 917-8831 fax (610) 917-8836
email mail@betzwood.com http://www.betzwood.com

SEAL BLOCK

I CERTIFY THAT THESE DOCUMENTS WERE PREPARED OR APPROVED BY ME, AND THAT I AM A DULY LICENSED ARCHITECT UNDER THE LAWS OF THE STATE OF MARYLAND.

BOARD OF ARCHITECTS 9374 Robin J. Kohn STATE OF MARYLAND

ROBIN J. KOHN AIA - MD. #9374 01.19.06

OMNIPOINT COMMUNICATIONS CAP OPERATIONS, LLC
a subsidiary of T-MOBILE-USA., INCORPORATED
fka VOICESTREAM WIRELESS CORPORATION

12050 BALTIMORE AVENUE BELTSVILLE, MD 20705
Tel. (240) 264-8600 FAX (240) 264-8610

APPROVALS
Omnipoint
LANDLORD
LEASING
R.F.
ZONING
CONSTRUCTION

NOTE
This Document is the Creation, Design, Property and Copyrighted Work of Omnipoint Communications Cap Operations, LLP a Subsidiary of T-Mobile USA, Inc., fka Voicestream Wireless. Any Duplication or use Without Express Written Consent is Strictly Prohibited.

PROJECT NO.	DRAWN BY	CHECK BY
OP-414	CMB	RJK

SUBMITTALS

NO.	DATE	ISSUE
0	10/01/02	TTV VSIT
1	06/05/03	Issued for Const. Review
2	09/25/03	REVISED PER COMMENTS
3	12/10/03	Minor Revision
4		
5		
6		

PLAN TO ACCOMPANY DRC REQUEST AND SPECIAL EXCEPTION PETITION

GRAPHIC SCALE
0 1 2

PROJECT
HONEYGO VILLAGE CENTER (aka CRESWELL PROPERTY)
SITE #BAN-254D
PROPOSED STEALTH DESIGN MONOPOLE
@ HONEYGO VILLAGE CENTER (aka CRESWELL PROPERTY)
9380 HONEYGO BOULEVARD
BALTIMORE, MARYLAND 21128
BALTIMORE COUNTY
DISTRICT #11 ACCOUNT #1103067500
COUNCILMANIC-5

SHEET TITLE
CABLE CONFIGURATIONS, MARKINGS, DETAILS AND GROUNDING ROD DETAILS

SHEET NUMBER
E-3

STEALTH DESIGN MONOPOLE @ HONEYGO VILLAGE CENTER (aka CRESWELL PROPERTY) SITE #BAN-254D

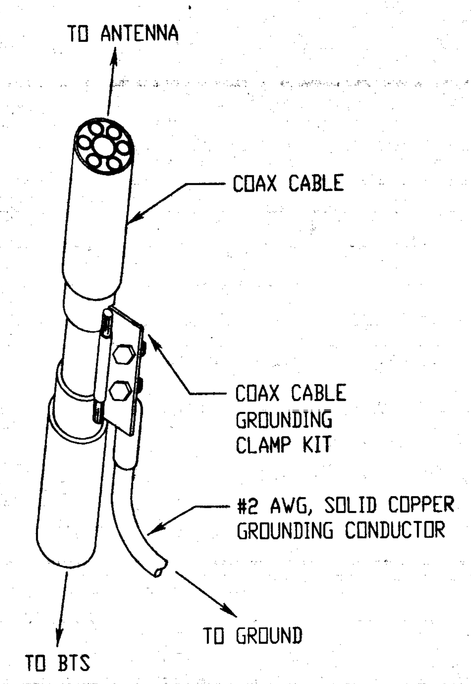

2 COAXIAL CABLE GROUNDING
E-2 SCALE: Not To Scale

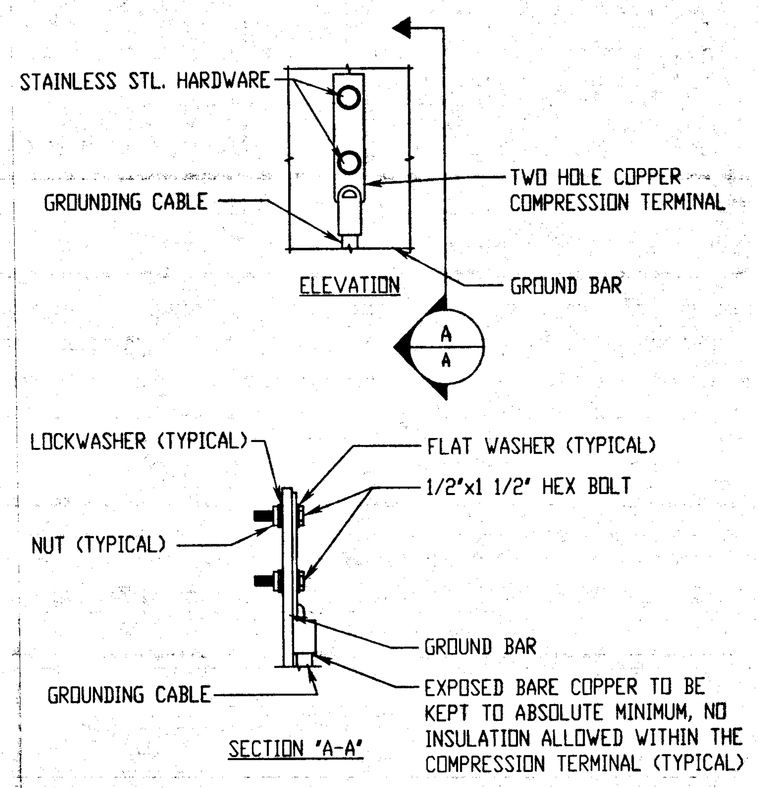

NOTE:
1. "DOUBLING UP" OR "STACKING " OF CONNECTION IS NOT PERMITTED.
2. OXIDE INHIBITING COMPOUND TO BE USED AT ALL LOCATIONS.

3 TYP. GROUNDING BAR CONNECTION
E-2 SCALE: Not To Scale

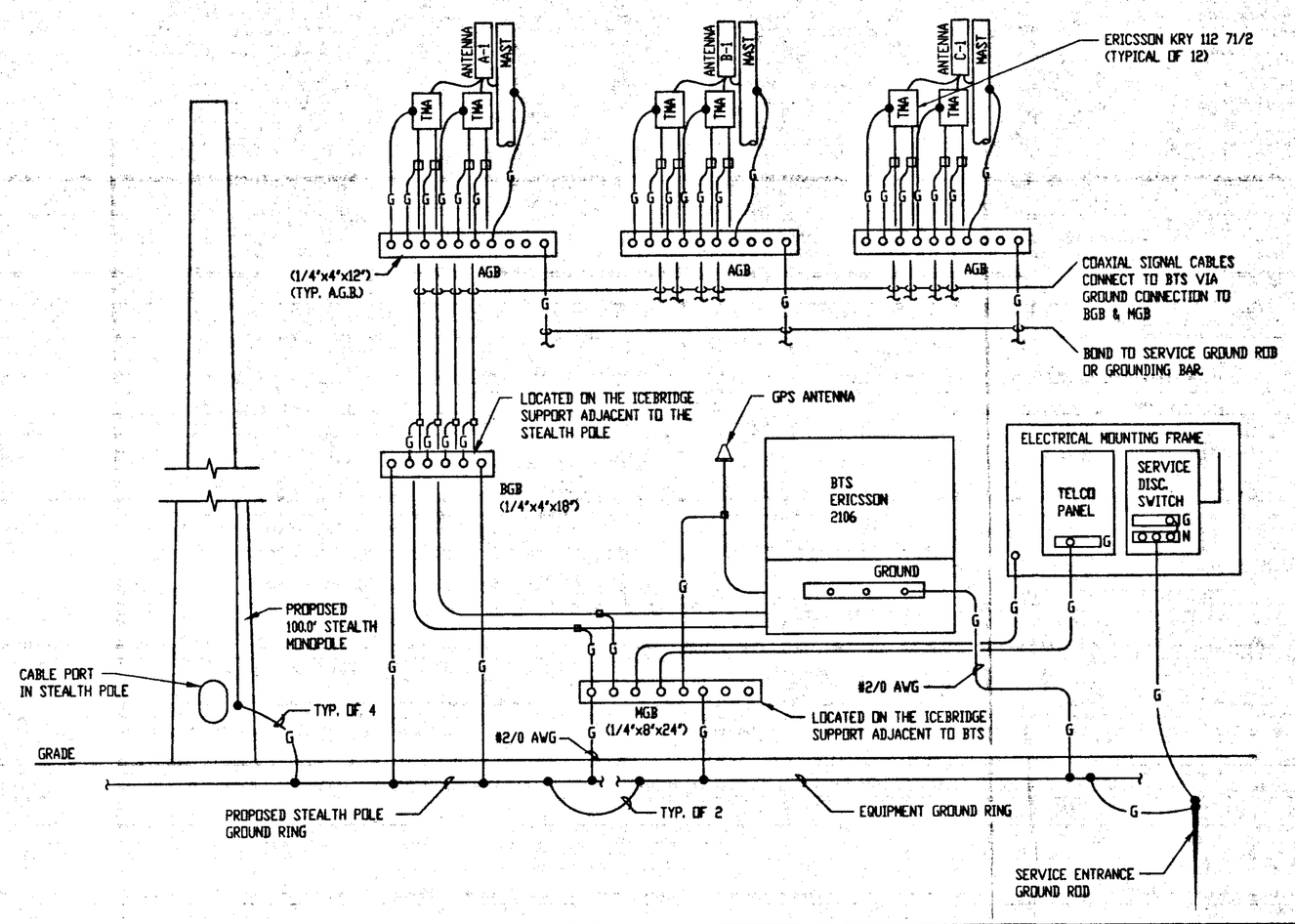

1 GROUNDING RISER DIAGRAM
E-2 SCALE: Not To Scale

NO-OX TO BE USED ON ALL CONNECTIONS

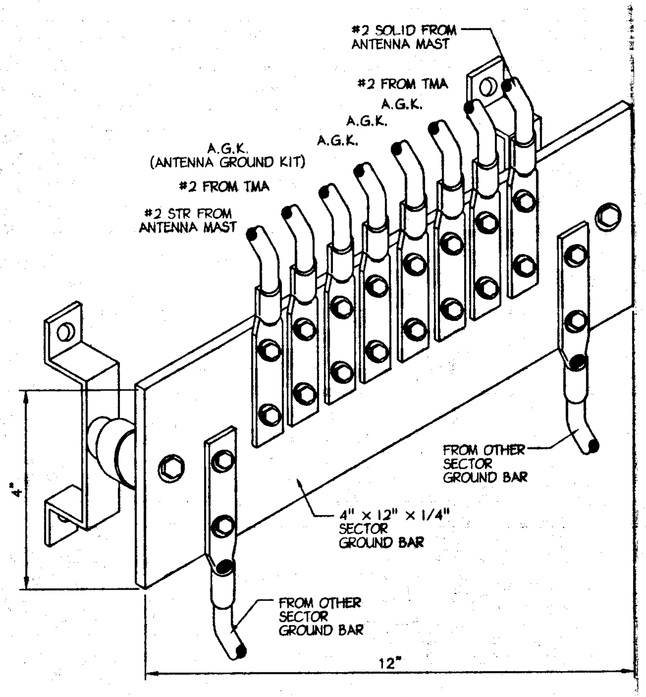

SECTOR A&C GROUND BAR CONNECTIONS
TO ICE BRIDGE GROUND BAR CONNECTIONS

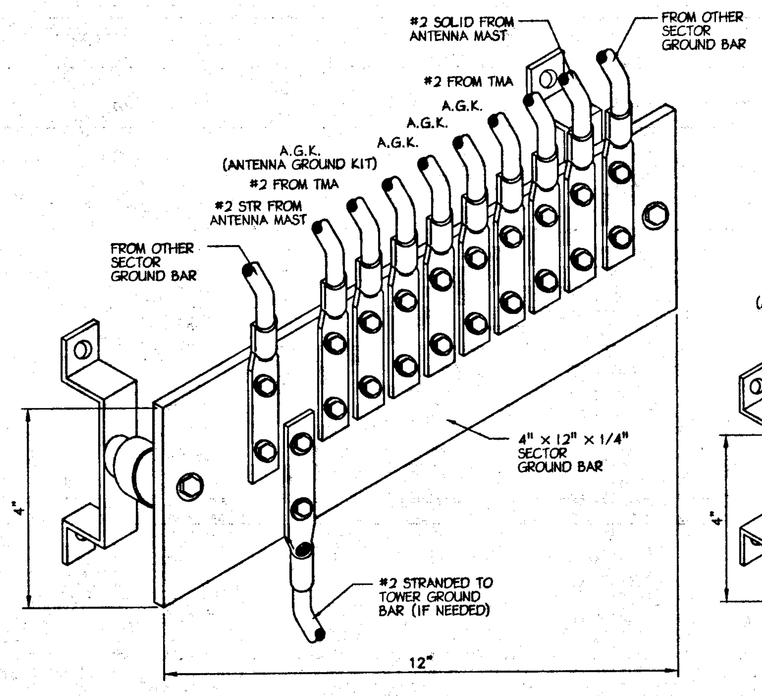

SECTOR B WITH DOWNLEAD
TO ICE BRIDGE GROUND BAR CONNECTIONS

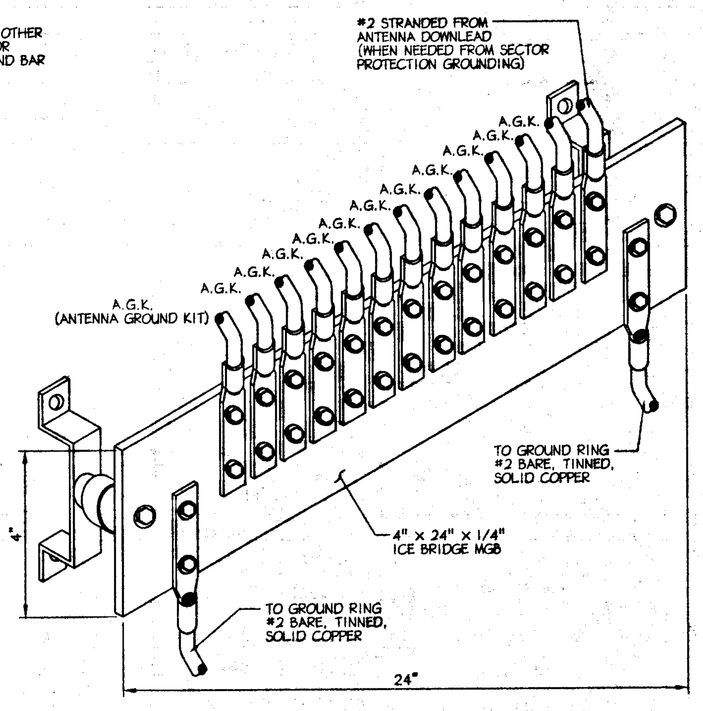

MASTER GROUNDING BAR
ICE BRIDGE MGB CONNECTIONS

GROUND BAR SCHEDULE				
TYPE	QTY.	MANUFACTURER	CATALOG NUMBER	REMARKS
MGB	1	VANCOMM Inc.	VCGB 8"x24" (1/4"x8"x24")	OR EQUAL
BGB	1	VANCOMM Inc.	VCGB (1/4"x4"x18")	OR EQUAL
AGB	1	VANCOMM Inc.	VCGB 12" (1/4"x4"x12")	OR EQUAL

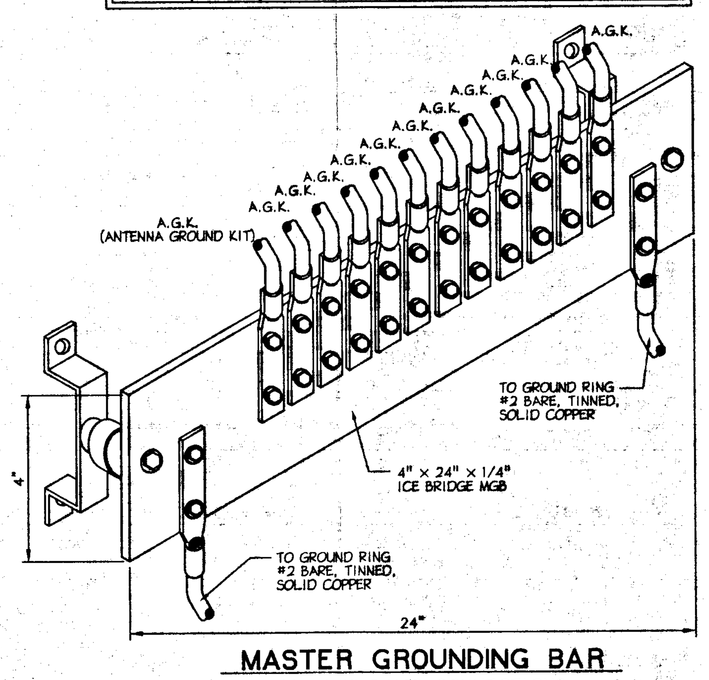

MASTER GROUNDING BAR
EQUIPMENT MGB CONNECTIONS

4 GROUNDING BAR (BGB & MGB)
E-2 SCALE: Not To Scale

Betzwood Associates PC
Architects & Engineers
Robin J. Kohn, AIA — Regis W. Kubit, PE
523 Kimberton Road, Suite 118 Phoenixville, PA 19460
tel. (610) 917-8831 fax (610) 917-8836
email mail@betzwood.com http://www.betzwood.com

SEAL BLOCK

I CERTIFY THAT THESE DOCUMENTS WERE PREPARED OR APPROVED BY ME, AND THAT I AM A DULY LICENSED ARCHITECT UNDER THE LAWS OF THE STATE OF MARYLAND.

BOARD OF ARCHITECTS 9374 ROBIN J. KOHN STATE OF MARYLAND

ROBIN J. KOHN AIA - MD. #9374 01.19.05

OMNIPOINT COMMUNICATIONS CAP OPERATIONS, LLC
a subsidiary of T-MOBILE USA., INCORPORATED
fka VOICESTREAM WIRELESS CORPORATION

12050 BALTIMORE AVENUE BELTSVILLE, MD 20705
Tel. (240) 264-8600 FAX (240) 264-8610

APPROVALS
Omnipoint
LANDLORD
LEASING
R.F.
ZONING
CONSTRUCTION

NOTE

This Document is the Creation, Design, Property and Copyrighted Work of Omnipoint Communications Cap Operations, LLP a Subsidiary of T-Mobile USA, Inc., fka Voicestream Wireless. Any Duplication or use Without Express Written Consent is Strictly Prohibited.

PROJECT NO.	DRAWN BY	CHECK BY
OP-414	CMB	RJK

SUBMITTALS

NO.	DATE	ISSUE
0	10/01/02	TTV VISIT
1	06/05/03	Issued for Const. Review
2	09/25/03	REVISED PER COMMENTS
3	12/10/03	Minor Revision
4		
5		
6		

PLAN TO ACCOMPANY DRC REQUEST AND SPECIAL EXCEPTION PETITION

GRAPHIC SCALE
0 1 2

PROJECT
HONEYGO VILLAGE CENTER (aka CRESWELL PROPERTY)
SITE #BAN-254D
PROPOSED STEALTH DESIGN MONOPOLE
@ HONEYGO VILLAGE CENTER (aka CRESWELL PROPERTY)
9380 HONEYGO BOULEVARD
BALTIMORE, MARYLAND 21128
BALTIMORE COUNTY
DISTRICT #11 ACCOUNT #1103067500
COUNCILMANIC-5

SHEET TITLE
GROUNDING RISER DIAGRAM AND GROUNDING DETAILS

SHEET NUMBER
E-2

STEALTH DESIGN MONOPOLE @ HONEYGO VILLAGE CENTER (aka CRESWELL PROPERTY) SITE #BAN-254D

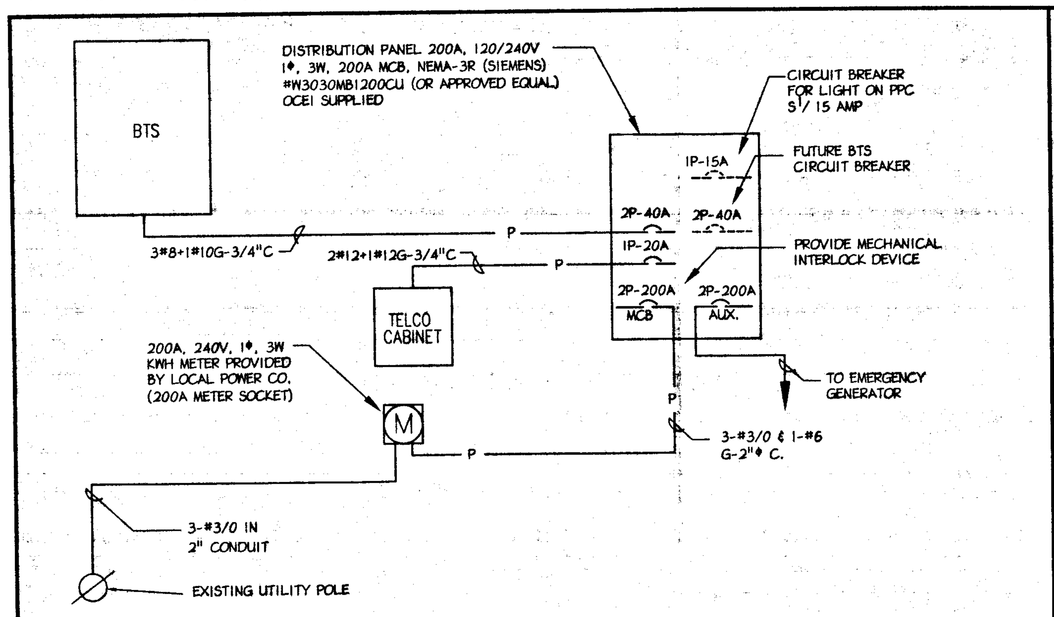

2 POWER DIAGRAM
E-1 SCALE: Not To Scale

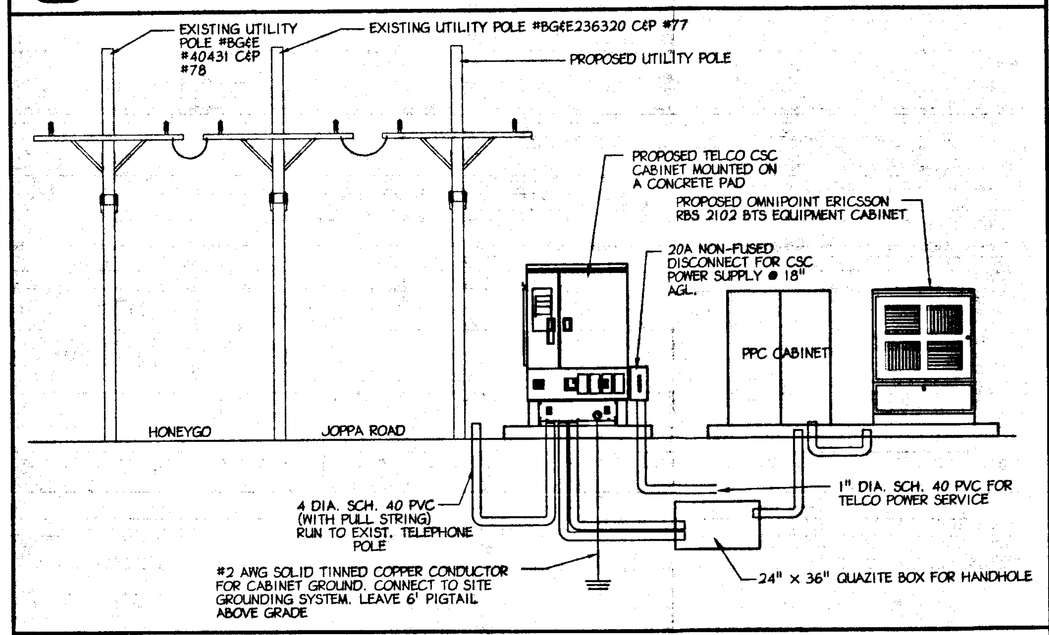

3 TELCO RISER
E-1 SCALE: Not To Scale

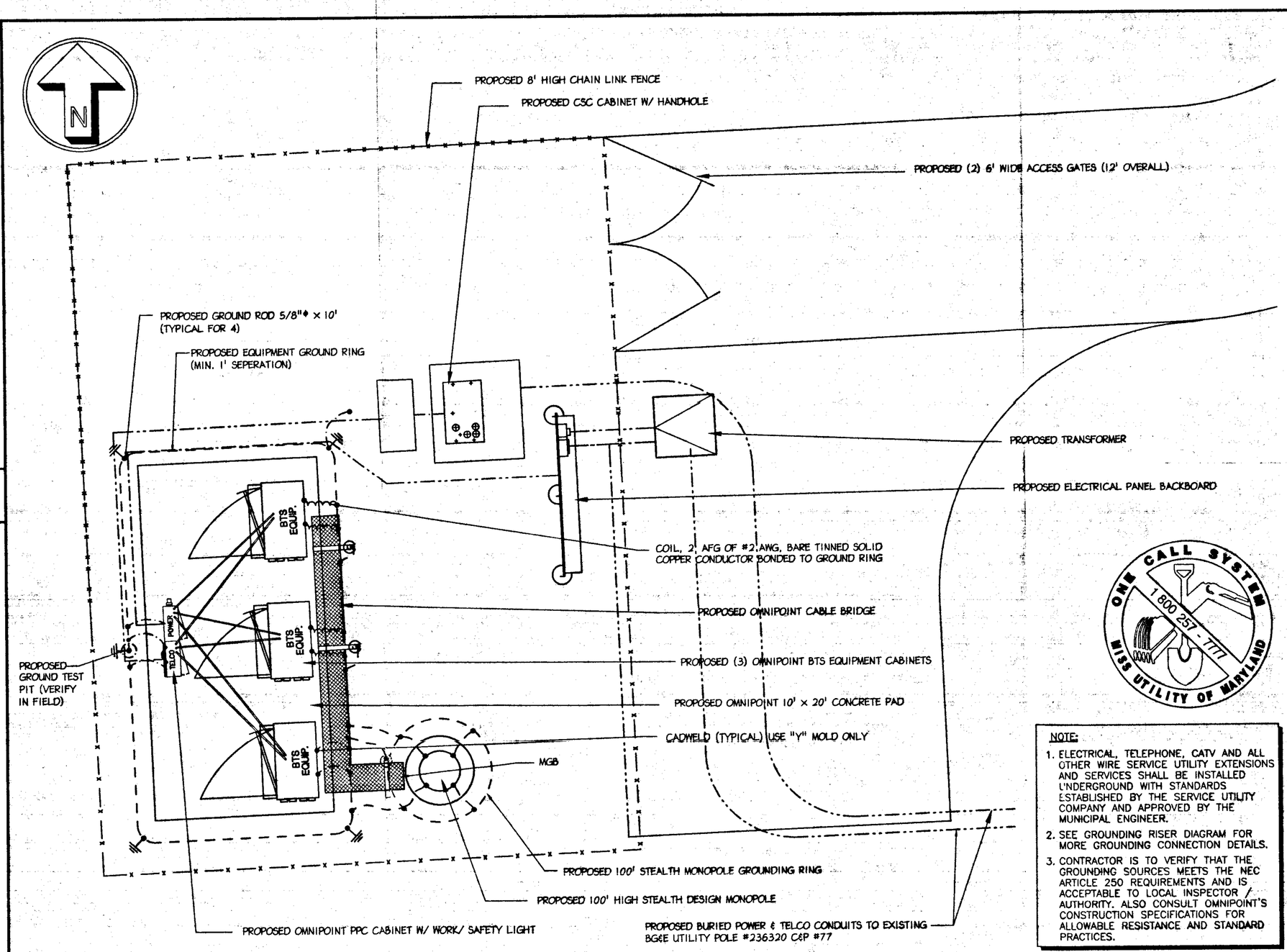

1 ELECTRICAL & GROUNDING PLAN
E-1 SCALE: 1/4" = 1'-0"

NOTE:

1. ELECTRICAL, TELEPHONE, CATV AND ALL OTHER WIRE SERVICE UTILITY EXTENSIONS AND SERVICES SHALL BE INSTALLED UNDERGROUND WITH STANDARDS ESTABLISHED BY THE SERVICE UTILITY COMPANY AND APPROVED BY THE MUNICIPAL ENGINEER.
2. SEE GROUNDING RISER DIAGRAM FOR MORE GROUNDING CONNECTION DETAILS.
3. CONTRACTOR IS TO VERIFY THAT THE GROUNDING SOURCES MEETS THE NEC ARTICLE 250 REQUIREMENTS AND IS ACCEPTABLE TO LOCAL INSPECTOR / AUTHORITY. ALSO CONSULT OMNIPOINT'S CONSTRUCTION SPECIFICATIONS FOR ALLOWABLE RESISTANCE AND STANDARD PRACTICES.

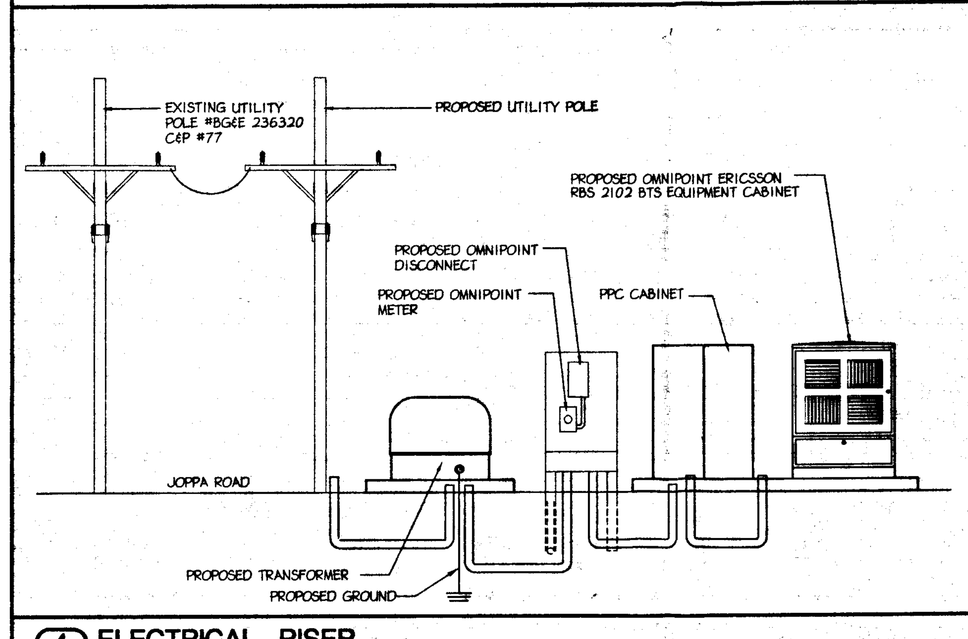

4 ELECTRICAL RISER
E-1 SCALE: Not To Scale

ELECTRICAL NOTES

1. ALL ELECTRICAL WORK SHALL CONFORM TO THE NATIONAL ELECTRICAL CODE (LATEST EDITION) AND APPLICABLE LOCAL CODES.
2. GROUNDING SHALL COMPLY WITH ARTICLE 250 OF THE NATIONAL ELECTRICAL CODE.
3. ALL ELECTRICAL ITEMS SHALL BE U.L. APPROVED OR LISTED.
4. ALL WIRES SHALL BE COPPER THHN/THWN. GROUND WIRES SHALL BE BARE, TIN-COATED OR GREEN INSULATED.
5. CONDUCTORS SHALL BE INSTALLED IN GALVANIZED RIGID STEEL CONDUIT, SCHEDULE 40 PVC, OR FLEXIBLE LIQUIDTIGHT CONDUIT AS INDICATED.
6. OBTAIN ALL PERMITS, PAY PERMIT FEES, AND SCHEDULE INSPECTIONS.
7. OBTAIN LOCAL POWER AND TELEPHONE COMPANY APPROVAL AND COORDINATE WITH UTILITY COMPANIES SERVICE ENTRANCE REQUIREMENTS.
8. PROVIDE ALL LABOR AND MATERIAL DESCRIBED ON THIS DRAWING, AND ALL ITEMS INCIDENTAL TO COMPLETING AND PRESENTING THIS PROJECT AS FULLY OPERATIONAL.
9. REFER TO STRUCTURAL DRAWINGS FOR PHYSICAL LOCATIONS OF SURFACE-MOUNTED GROUND BARS. GROUNDING CONNECTIONS SHALL BE EXOTHERMIC TYPE ("CADWELD") TO ANTENNA MASTS, FENCE POSTS, TOWER STEEL, AND GROUNDING RING. REMAINING GROUNDING CONNECTIONS SHALL BE COMPRESSION FITTINGS. ALL GROUND BAR CONNECTIONS SHALL BE MADE WITH TWO-HOLED LUGS.
10. GROUND COAXIAL CABLE SHIELDS AT BOTH ENDS WITH MANUFACTURER'S GROUNDING KITS. GROUNDING SHALL NOT EXCEED 100' BETWEEN GROUND KITS
11. ROUTE GROUNDING CONDUCTORS ALONG THE SHORTEST AND STRAIGHTEST PATH POSSIBLE. BEND GROUNDING LEADS WITH A MINIMUM 12" RADIUS.
12. PROVIDE GROUND RODS AND GROUND RING AS SHOWN ON SITE PLAN AND GROUNDING RISER DIAGRAM. TEST AND VERIFY THAT THE IMPEDANCE DOES NOT EXCEED 5 OHMS TO GROUND BY MEANS OF A BIDDLE-MEGGER TESTER. GROUNDING AND OTHER OPERATIONAL TESTING SHALL BE WITNESSED BY THE OWNER'S REPRESENTATIVE.
13. PROVIDE 2" SCHEDULE 40 PVC UNDERGROUND CONDUIT WITH PULL WIRE BETWEEN TELEPHONE COMPANY DEMARCATION POINT AND THE TELCO PANEL. CONDUCTOR TYPE: CATEGORY 5, 6 PAIR SHIELDED CABLE.
14. PROVIDE 2" SCHEDULE 40 PVC UNDERGROUND CONDUIT WITH PULL WIRE BETWEEN ELECTRICAL UTILITY COMPANY DEMARCATION POINT AND KWH METER BASE.
15. INSTALL #2 COPPER STRANDED WIRE WITH GREEN INSULATION FOR ABOVE GRADE GROUNDING AND #2 BARE SOLID TINNED COPPER WIRE FOR BELOW GRADE GROUNDING, UNLESS OTHERWISE SPECIFIED ON THE DRAWING.
16. THE GROUND ELECTRODE SYSTEM SHALL CONSIST OF DRIVEN GROUND RODS UNIFORMLY SPACED AROUND CELL SITE. THE GROUND RODS SHALL BE 5/8"x 8'-0" COPPER CLAD STEEL. THE RODS SHALL BE INTERCONNECTED WITH #2 AWG BARE SOLID TINNED COPPER GROUND WIRE BURIED 30" BELOW GRADE. THE GROUNDING RODS ARE TO BE BURIED NO MORE THAN 15 FEET APART OR CLOSER THAN 8 FEET TOGETHER.
17. GROUNDING CONDUCTORS FROM ABOVE THE GROUND TO THE BELOW-GRADE GROUNDING RING SHALL BE INSULATED FROM EARTH CONTACT BY PASSING THROUGH A PVC PIPE. PVC PIPE SHALL EXTEND AT LEAST 12" ABOVE AND 12" BELOW THE GRADE LEVEL.
18. BONDING OF GROUNDING CONDUCTORS (NEUTRAL) AND GROUNDING CONDUCTORS SHALL BE AT THE SERVICE DISCONNECT DEVICE, BONDING JUMPER SHALL BE INSTALLED PER NEC ARTICLE 250-26.
19. ALL ABOVE GROUND CADWELDING SHALL BE COATED WITH A ZINC RICH PAINT.
20. IF CODES REQUIRE VERTICAL RISER TO BE ISOLATED IN CONDUIT, PVC CONDUIT IS PREFERRED. IF METALLIC CONDUIT SHOULD BE REQUIRED, GROUNDING BUSHINGS SHALL BE INSTALLED ON EACH END OF THE CONDUIT AND BONDED TO GROUND BARS USING #2 AWG THWN STRANDED COPPER CONDUCTORS WITH GREEN INSULATOR.
21. PROVIDE 2" PVC BURIED POWER & TELCO CONDUIT FROM BACKBOARD TO FUTURE BTS. CAP ALL ENDS AT TERMINATION ABOVE CONCRETE SLAB AND AT BACKBOARD. PROVIDE FOR ONE 2 POLE 40 AMPERE CIRCUIT BREAKER IN DISTRIBUTION PANEL.

LEGEND

- SAFETY DISCONNECT SWITCH
- PANEL BOARD
- KILOWATT HOUR METER
- TRANSFORMER
- CIRCUIT BREAKER
- MANUAL TRANSFER SWITCH
- LIGHT FIXTURE
- LIGHT SWITCH
- GFI DUPLEX RECEPTACLE
- AC GENERATOR CONNECTOR
- COPPER GROUND BAR 1/4"x4"x12", UNLESS NOTED OTHERWISE
- EXOTHERMIC WELD CONNECTION
- COMPRESSION FITTING GROUND CONNECTION
- COAXIAL CABLE SHIELD GROUND KIT CONNECTION
- ACCESS GROUND ROD
- GROUND ROD
- —P— POWER WIRING
- —T— TELCO WIRING
- —G— GROUND WIRING

ABBREVIATIONS

A	AMPERE	SN	SOLID NEUTRAL	TBG	TOP GROUND BAR
C	CONDUIT	SW	SWITCH	BGB	BOTTOM GROUND BAR
G	GROUND	V	VOLT	MGB	MASTER GROUND BAR
KWH	KILOWATT HOUR	W	WIRE	(E)	EXISTING
P	POLE	Φ	PHASE	(N)	NEW
AWG	AMERICAN WIRE GAUGE	IGW	INSULATED GREEN WIRE	(P)	PROPOSED

5 ELECTRICAL AND TELEPHONE NOTES AND LEGEND
E-1 SCALE: Not To Scale

Betzwood Associates PC
Architects & Engineers
Robin J. Kohn, AIA — Regis W. Kubik, PE
523 Kimberton Road, Suite 118 Phoenixville, PA 19460
tel. (610) 917-8831 fax (610) 917-8836
email mail@betzwood.com http://www.betzwood.com

SEAL BLOCK

I CERTIFY THAT THESE DOCUMENTS WERE PREPARED OR APPROVED BY ME, AND THAT I AM A DULY LICENSED ARCHITECT UNDER THE LAWS OF THE STATE OF MARYLAND.

BOARD OF ARCHITECTS No. 9374 ROBIN J. KOHN STATE OF MARYLAND

ROBIN J. KOHN AIA - MD. #9374 01.19.05

OMNIPOINT COMMUNICATIONS CAP OPERATIONS, LLC
a subsidiary of T-MOBILE USA, INCORPORATED
fka VOICESTREAM WIRELESS CORPORATION

12050 BALTIMORE AVENUE BELTSVILLE, MD 20705
Tel. (240) 264-8600 FAX (240) 264-8610

APPROVALS

Omnipoint _____
LANDLORD _____
LEASING _____
R.F. _____
ZONING _____
CONSTRUCTION _____

NOTE

This Document is the Creation, Design, Property and Copyrighted Work of Omnipoint Communications Cap Operations, LLP a Subsidiary of T-Mobile USA, Inc., fka Voicestream Wireless. Any Duplication or use Without Express Written Consent is Strictly Prohibited.

PROJECT NO.	DRAWN BY	CHECK BY
OP-414	CMB	RJK

SUBMITTALS

NO.	DATE	ISSUE
0	10/01/02	TTV VISIT
1	06/05/03	Issued for Const. Review
2	09/25/03	REVISED PER COMMENTS
3	12/10/03	Minor Revision
4		
5		
6		

PLAN TO ACCOMPANY DRC REQUEST AND SPECIAL EXCEPTION PETITION

GRAPHIC SCALE

0 1 2

PROJECT

HONEYGO VILLAGE CENTER (fka CRESWELL PROPERTY)
SITE #BAN-254D
PROPOSED STEALTH DESIGN MONOPOLE
• HONEYGO VILLAGE CENTER (fka CRESWELL PROPERTY)
9380 HONEYGO BOULEVARD
BALTIMORE, MARYLAND 21128
BALTIMORE COUNTY
DISTRICT #11 ACCOUNT #1103067500
COUNCILMANIC-5

SHEET TITLE

GROUNDING PLAN, ELECTRIC AND TELCO NOTES AND DIAGRAMS

SHEET NUMBER

E-1

STEALTH DESIGN MONOPOLE • HONEYGO VILLAGE CENTER (aka CRESWELL PROPERTY) SITE #BAN-254D

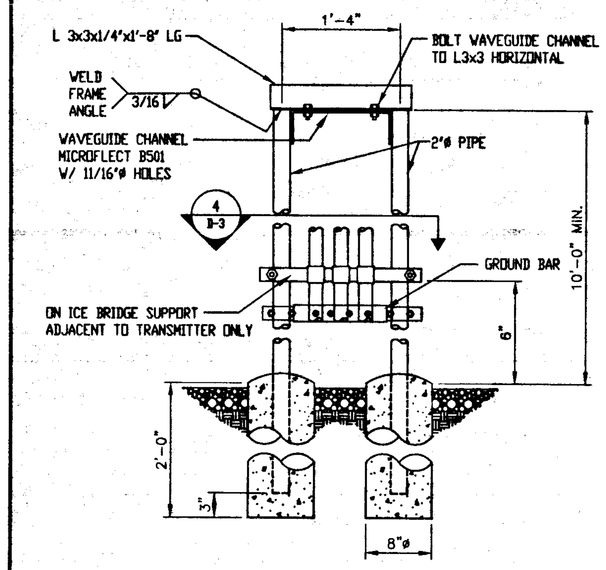

1 D-4 DOUBLE ICE-BRIDGE SUPPORT
SCALE: Not To Scale

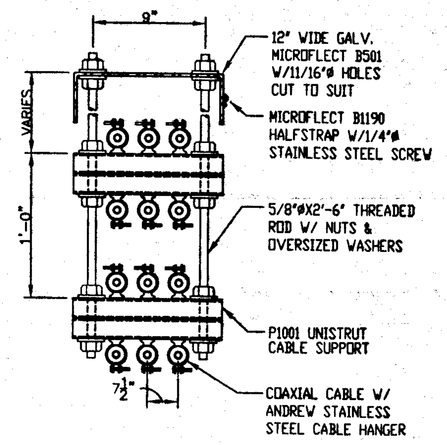

2 D-4 ICE-BRIDGE CABLE SUPPORT
SCALE: Not To Scale

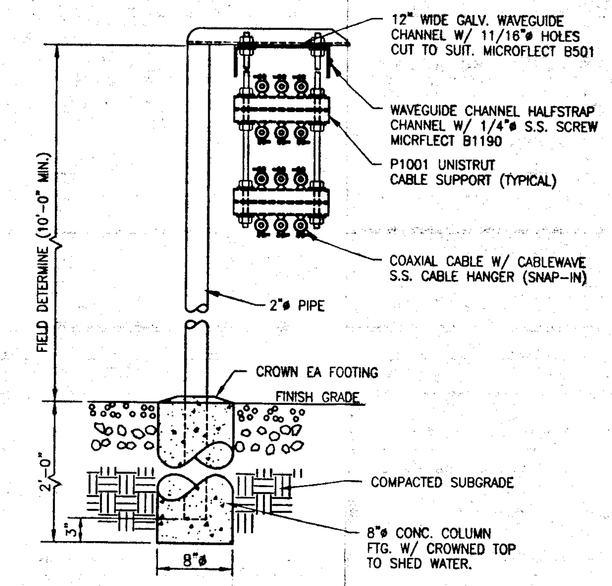

6 D-4 CABLE BRIDGE DETAIL
SCALE: Not To Scale

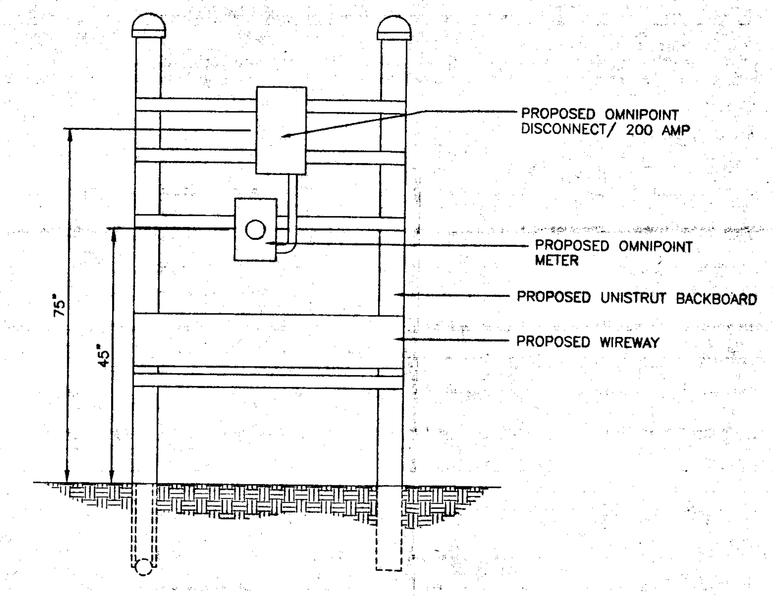

7 D-4 ELECTRICAL BACKBOARD
SCALE: Not To Scale

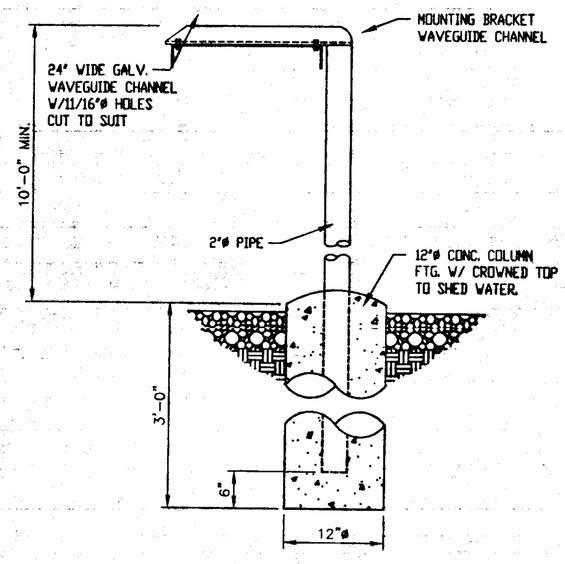

3 D-4 SINGLE ICE BRIDGE SUPPORT
SCALE: Not To Scale

GENERAL NOTE:
INFORMATION SHOWN ON THIS SHEET IS FOR CONSTRUCTION & FABRICATION OF COMPONENTS AND NOT A VISUAL REPRESENTATION OF SITE CONDITIONS.

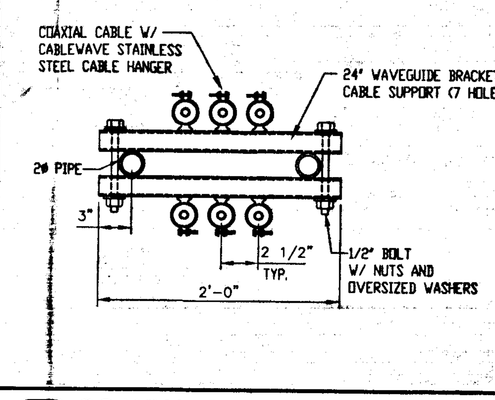

4 D-4 COAXIAL CABLE HANGER SUPPORT
SCALE: Not To Scale

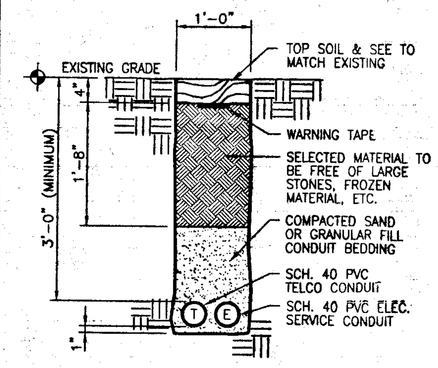

NOTE:
SCH. 40 PVC U/L APPROV. CONDUIT SHALL BE USED FOR ALL NEW UNDERGROUND ELECTRICAL & TELCO SERVICES. PROVIDE APPROVED PULL BOXES AS REQUIRED & COORDINATE INSTALLATION WITH ALL UTILITY COMPANIES FOR INTERFACING AT TERMINATION POINTS. PROVIDE FULL LENGTH PULL CHORDS. (TYPICAL)

8 D-4 DUCT BANK DETAIL
SCALE: Not To Scale

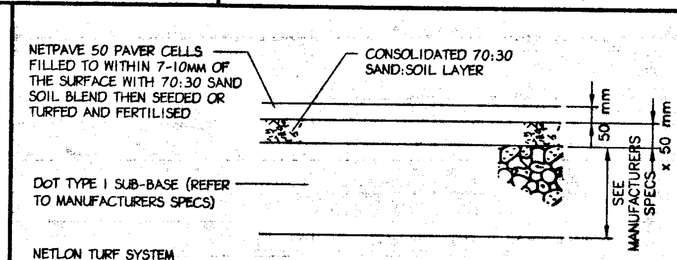

1. PLACE PAVER UNIT (WITH DIMPLED FACE UPPERMOST) ONTO THE PREPARED BASE. THE LEADING EDGE OF PAVERS SHOULD HAVE FIXING LUGS EXPOSED FOR QUICK AND EASY INSTALLATION. NO PEGGING IS REQUIRED. EDGING BOARDS OR KERBS CAN BE USED WHERE REQUIRED.
2. CONNECT THE PAVERS USING THE LUGS AND SLOTS, PROGRESSING OVER THE THE AREA IN ROWS. USE PROTECTIVE GLOVES TO AVOID ABRASIONS.
3. PAVERS CAN BE CUT, USING A HAND OR POWER SAW, TO FIT AROUND OBSTRUCTIONS AND CONTOURS, PIECES, WHICH ARE LESS THAN HALF THE ORGINAL SIZE, SHOULD NOT BE USED.
4. FILL PAVERS WITH THE SPECIFIED SAND:SOIL ROOTZONE. FINISHED LEVELS SHOULD BE 7-10mm BELOW THE TOP OF THE CELLS AFTER SETTLEMENT. DO NOT OVERFILL THE PAVER CELLS. A LIGHT, VIBRATING PLATE CAN BE USED TO CONSOLIDATE THE PAVERS AND TO SETTLE THE ROOTZONE INFILL IF REQUIRED.
5. CARRY OUT A NORMAL SEEDING, FERTILIZING AND WATERING PROGRAMME. A VERY LIGHT TOP DRESSING MAY BE APPLIED TO JUST COVER THE SEED AND TO PROVIDE ADEQUAE GERMINATION CONDITIONS.
6. THE SURFACE MAY BE TRAFFICKLED IMMEDIATELY BUT IT IS PREFERABLE TO ALLOW THE GRASS TO FULLY ESTABISH PRIOR TO USE.

11 D-4 GRASS PAVERS
SCALE: Not To Scale

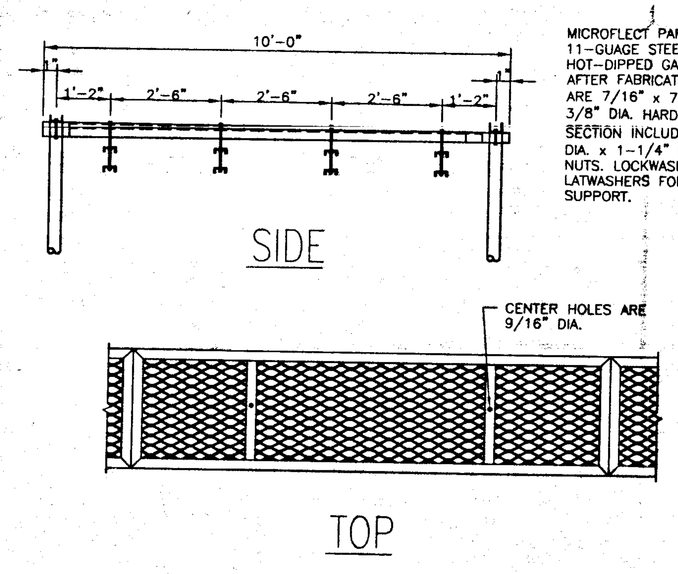

MICROFLECT PART #B501 11-GUAGE STEEL & ARE HOT-DIPPED GALVANIZED AFTER FABRICATION ALL SLOTS ARE 7/16" x 7/8" LONG FOR 3/8" DIA. HARDWARE EACH SECTION INCLUDES TEN 3/8" DIA. x 1-1/4" LONG BOLTS, NUTS, LOCKWASHERS, AND LATWASHERS FOR SPLICING OR SUPPORT.

5 D-4 ICE BRIDGE DETAIL
SCALE: Not To Scale

GENERAL STRUCTURAL NOTES:

1. SPECIFICATIONS / CODES
   CONCRETE WORK SHALL BE PERFORMED IN ACCORDANCE WITH LATEST EDITION OF THE ACI CODE. STEEL WORK SHALL BE PERFORMED IN ACCORDANCE WITH AISC STEEL CONSTRUCTION MANUAL, 9TH EDITION. WELDING SHALL BE PERFORMED IN ACCORDANCE WITH AMERICAN WELDING SOCIETY (AWS) D1.1-92 "STRUCTURAL WELDING CODE-STEEL. REINFORCING STEEL SHALL BE PLACED IN ACCORDANCE WITH THE CONCRETE REINFORCING STEEL INSTITUTE (CRSI), "MANUAL OF STANDARD PRACTICE".
2. MATERIALS
   CONCRETE: FC = 3000 PSI
   REINFORCING STEEL: ASTM A615, GRADE 60.
   WIRE MESH: ASTM A 185
   STRUCTURAL STEEL: ASTM A 36
   ELECTRODES FOR WELDING: E 70XX
   GALVANIZING: ASTM A 153
   EXPANSION BOLTS: HILTI KWIK BOLT II, STAINLESS STEEL, 3/4" EMBEDMENT, OR AN APPROVED EQUAL.
3. GEOTECHNICAL:
   CONCRETE SLAB DESIGN IS BASED ON 2000 PSF SOIL BEARING CAPACITY. IF OTHER CONDITIONS EXIST, FOUNDATION SHALL BE REDESIGNED. CONTRACTOR SHALL HAVE SOIL BEARING CAPACITY VERIFIED BY A LICENSED PROFESSIONAL GEOTECHNICAL ENGINEER PRIOR TO INITIATION OF CONSTRUCTION ACTIVITIES.
   DL = 8,100 LBS.
   LL = 100 PSF.

   ALL BACKFILL SHALL BE THOROUGHLY COMPACTED TO A MINIMUM OF 95% MODIFIED PROCTOR DENSITY.

9 D-4 NOTES
SCALE: Not To Scale

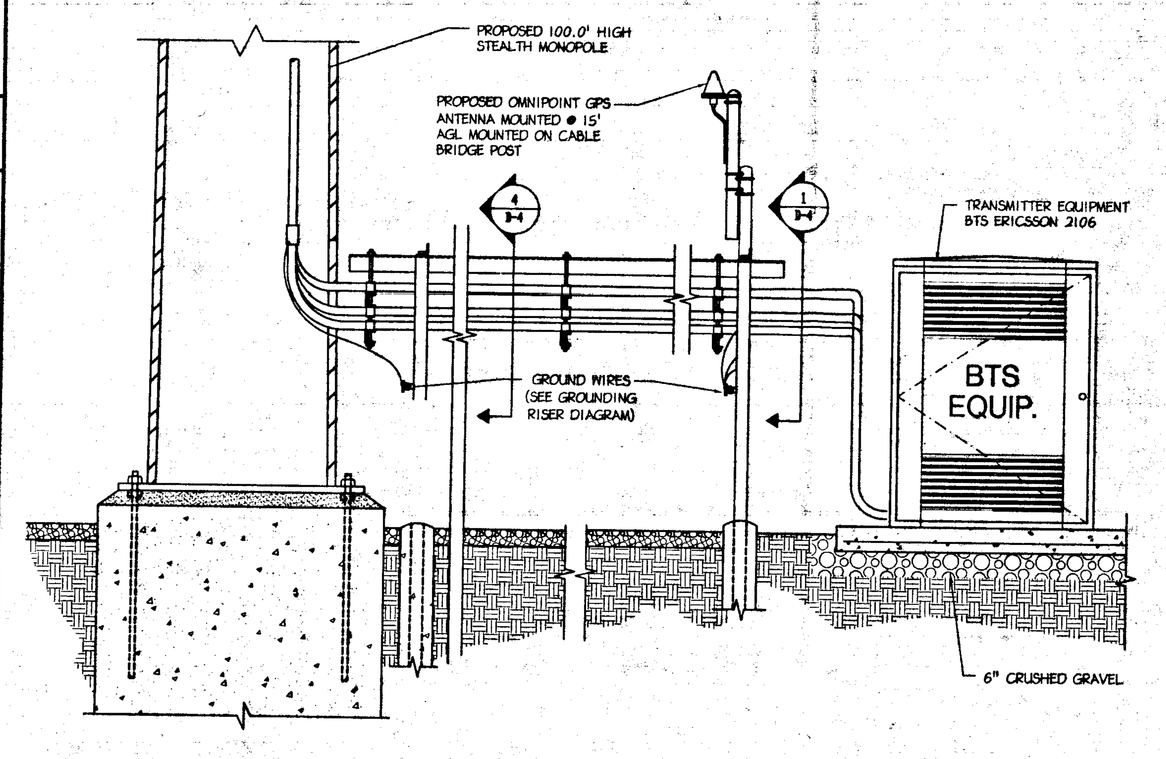

10 D-4 COAXIAL CABLE ROUTING
SCALE: Not To Scale

Betzwood Associates PC
Architects & Engineers
Robin J. Kohn, AIA
Regis W. Kubit, PE
523 Kimberton Road, Suite 118 Phoenixville, PA 19460
tel. (610) 917-8831 fax (610) 917-8836
email mail@betzwood.com http//www.betzwood.com

SEAL BLOCK

I CERTIFY THAT THESE DOCUMENTS WERE PREPARED OR APPROVED BY ME, AND THAT I AM A DULY LICENSED ARCHITECT UNDER THE LAWS OF THE STATE OF MARYLAND.

BOARD OF ARCHITECTS 9374 ROBIN J. KOHN STATE OF MARYLAND

ROBIN J. KOHN AIA - MD. #9374 01.19.05

OMNIPOINT COMMUNICATIONS CAP OPERATIONS, LLC
a subsidiary of T-MOBILE USA, INCORPORATED
fka VOICESTREAM WIRELESS CORPORATION

12050 BALTIMORE AVENUE BELTSVILLE, MD 20705
Tel. (240) 264-8600 FAX (240) 264-8610

APPROVALS

Omnipoint _____
LANDLORD _____
LEASING _____
R.F. _____
ZONING _____
CONSTRUCTION _____

NOTE

This Document is the Creation, Design, Property and Copyrighted Work of Omnipoint Communications Cap Operations, LLP a Subsidiary of T-Mobile USA, Inc., fka Voicestream Wireless. Any Duplication or use Without Express Written Consent is Strictly Prohibited.

PROJECT NO.	DRAWN BY	CHECK BY
OP-414	CMB	RJK

SUBMITTALS

NO.	DATE	ISSUE
0	10/01/02	TTV VISIT
1	06/05/03	Issued for Const. Review
2	09/25/03	REVISED PER COMMENTS
3	12/10/03	Minor Revision
4		
5		
6		

PLAN TO ACCOMPANY DRC REQUEST AND SPECIAL EXCEPTION PETITION

GRAPHIC SCALE
0 1 2

PROJECT
HONEYGO VILLAGE CENTER (aka CRESWELL PROPERTY)
SITE #BAN-254D
PROPOSED STEALTH DESIGN MONOPOLE @ HONEYGO VILLAGE CENTER (aka CRESWELL PROPERTY)
9380 HONEYGO BOULEVARD
BALTIMORE, MARYLAND 21128
BALTIMORE COUNTY
DISTRICT #11 ACCOUNT #1103067500
COUNCILMANIC-5

SHEET TITLE
CONSTRUCTION DETAILS, CABLE BRIDGE DETAILS AND NOTES

SHEET NUMBER
D-4

STEALTH DESIGN MONOPOLE @ HONEYGO VILLAGE CENTER (aka CRESWELL PROPERTY) SITE #BAN-254D

NOTES:

1. INTERPERT DIMENSIONS AND TOLERANCES IN ACCORDANCE WITH ANSI Y14.5M - 1994
2. ALL DIMENSIONS ARE IN INCHES. TO CONVERT INCHES TO MILLIMETERS, USE 1.0 INCHES = 25.4 MILLIMETERS
3. MATERIALS: 0.060" THICK (16 GA) STAINLESS STEEL SHEET PER ASTM A167.
4. NO FINISH.
5. REMOVE ALL BURRS & SHARP EDGES.

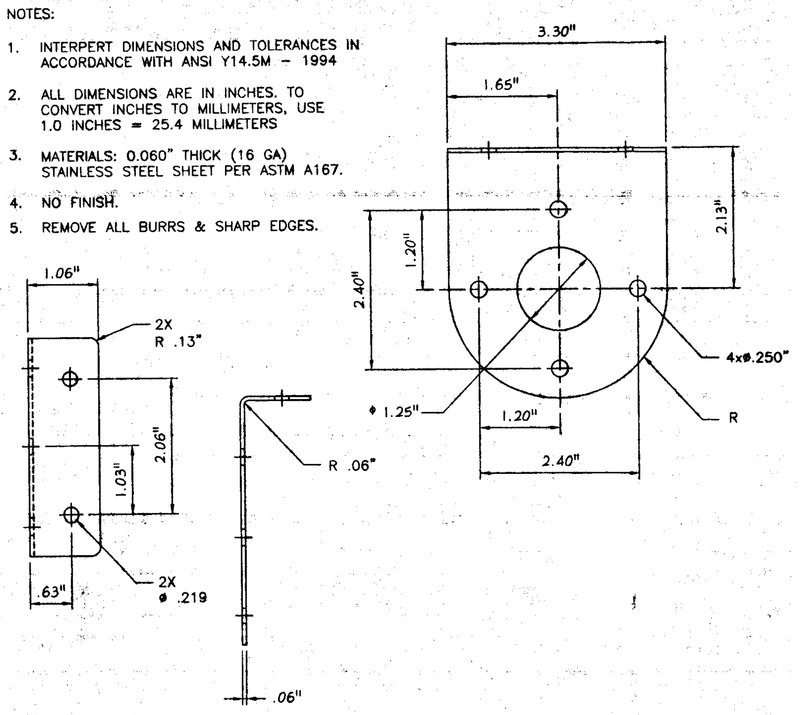

1 D-3 GPS MOUNTING BRACKET GASKET
SCALE: Not To Scale

NOTES:

1. INTERPERT DIMENSIONS AND TOLERANCES IN ACCORDANCE WITH ANSI Y14.5M - 1994
2. ALL DIMENSIONS ARE IN INCHES. TO CONVERT INCHES TO MILLIMETERS, USE 1.0 INCHES = 25.4 MILLIMETERS
3. REMOVE ADHESIVE BACKING FROM GASKET (ITEM 2, PART #58532-80004) AND CENTER BRACKET (ITEM 1, PART #070-58532-02) AS SHOWN. INSURE ø .250 HOLES OF ITEM 1 ARE UNOBSTRUCTED.

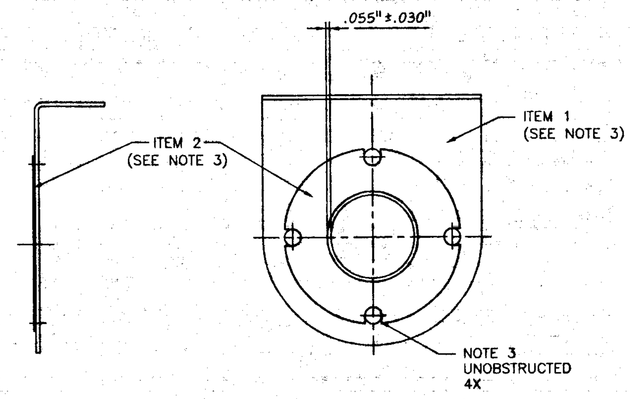

2 D-3 GPS MOUNTING BRACKET DETAIL
SCALE: Not To Scale

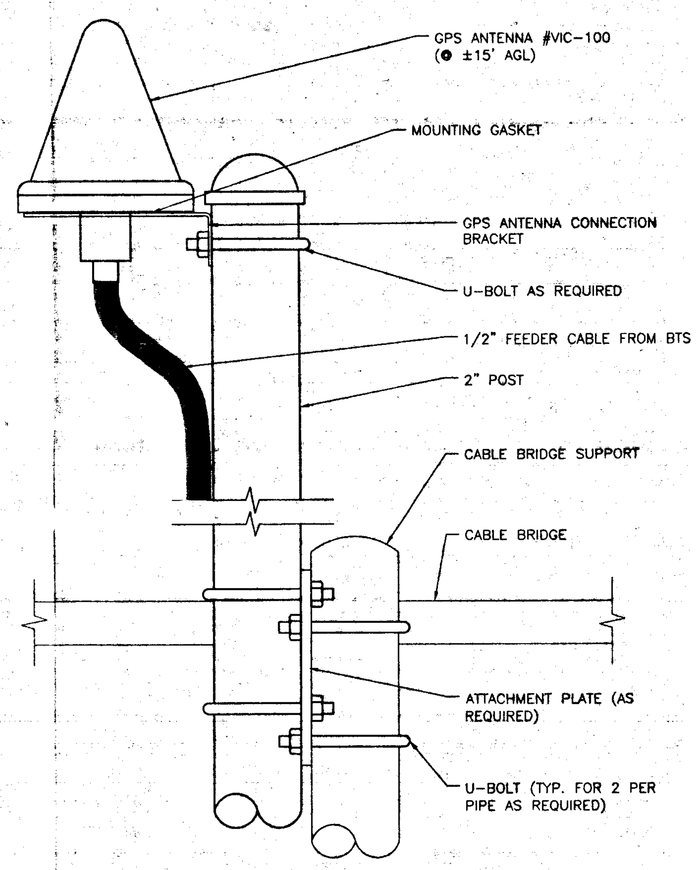

3 D-3 GPS ANTENNA MOUNTING
SCALE: Not To Scale

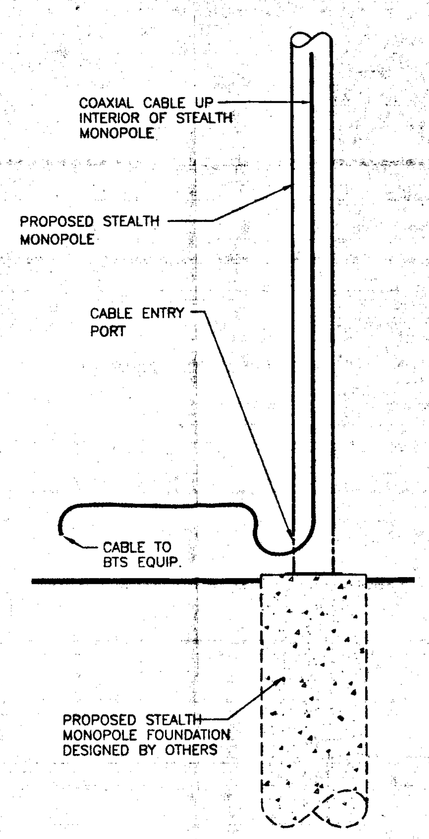

4 D-3 CABLE ENTRANCE INTO TOWER
SCALE: Not To Scale

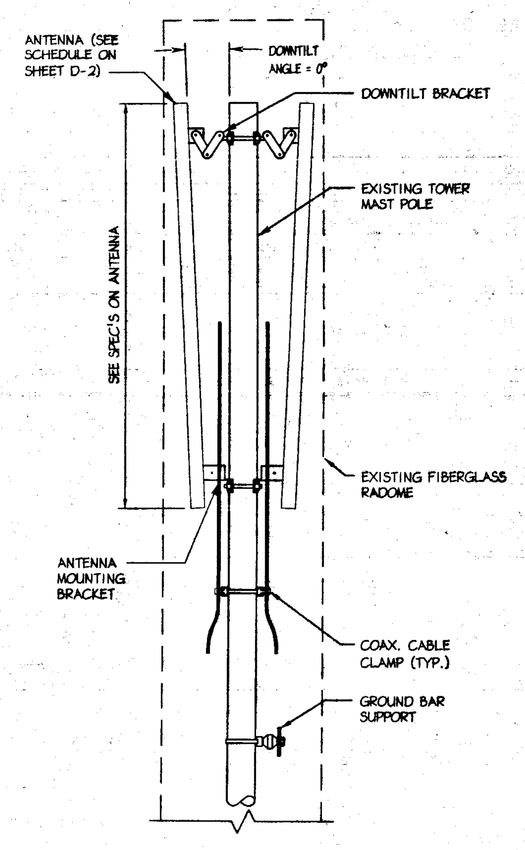

5 D-3 ANTENNA DETAIL
SCALE: Not To Scale

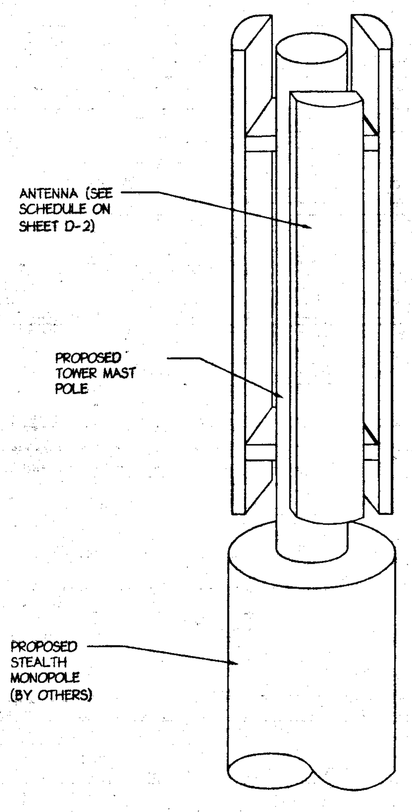

6 D-3 ANTENNA MOUNTING ARRANGEMENT
SCALE: Not To Scale

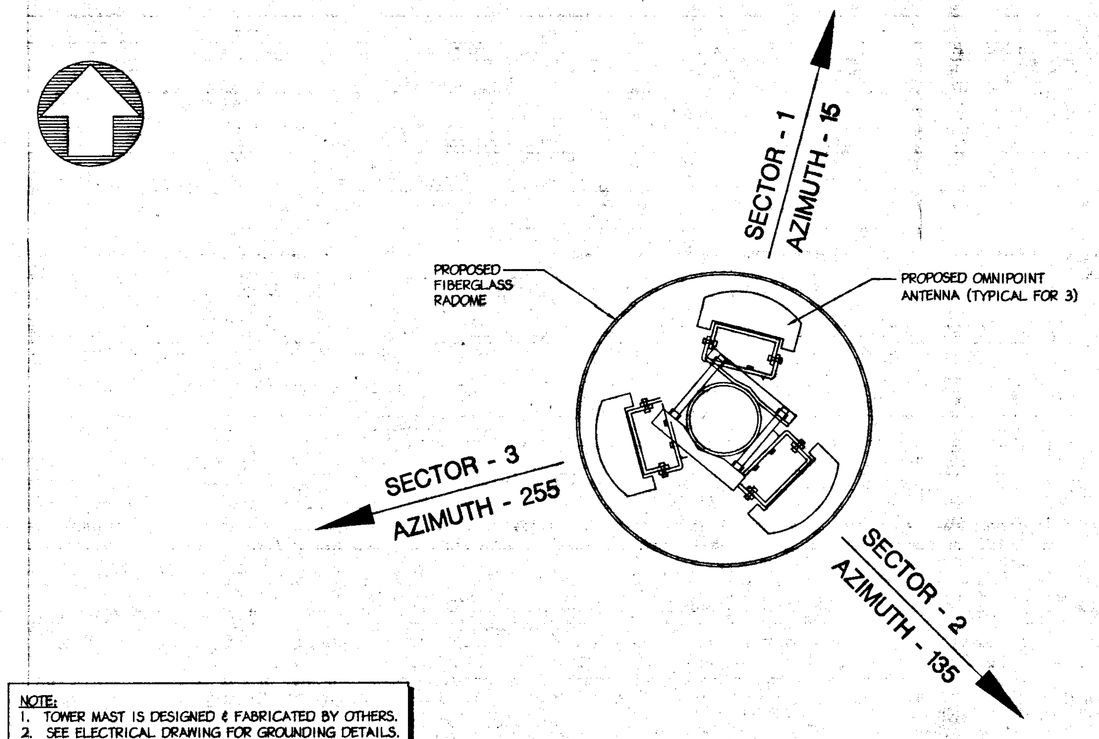

NOTE:
1. TOWER MAST IS DESIGNED & FABRICATED BY OTHERS.
2. SEE ELECTRICAL DRAWING FOR GROUNDING DETAILS.

7 D-3 ANTENNA CLUSTER MOUNTING
SCALE: Not To Scale

Betzwood Associates PC
Architects & Engineers
Robin J. Kohn, AIA — Regis W. Kubit, PE
523 Kimberton Road, Suite 118 Phoenixville, PA 19460
tel. (610) 917-8831 fax (610) 917-8836
email mail@betzwood.com http://www.betzwood.com

SEAL BLOCK

I CERTIFY THAT THESE DOCUMENTS WERE PREPARED OR APPROVED BY ME, AND THAT I AM A DULY LICENSED ARCHITECT UNDER THE LAWS OF THE STATE OF MARYLAND.

BOARD OF ARCHITECTS — Robin J. Kohn — STATE OF MARYLAND

ROBIN J. KOHN AIA - MD. #6374 01.19.05

OMNIPOINT COMMUNICATIONS CAP OPERATIONS, LLC
a subsidiary of T-MOBILE USA, INCORPORATED
fka VOICESTREAM WIRELESS CORPORATION

12050 BALTIMORE AVENUE BELTSVILLE, MD 20705
Tel. (240) 264-8600 FAX (240) 264-8610

APPROVALS

Omnipoint	
LANDLORD	
LEASING	
R.F.	
ZONING	
CONSTRUCTION	

NOTE

This Document is the Creation, Design, Property and Copyrighted Work of Omnipoint Communications Cap Operations, LLP a Subsidiary of T-Mobile USA, Inc., fka Voicestream Wireless. Any Duplication or use Without Express Written Consent is Strictly Prohibited.

PROJECT NO.	DRAWN BY	CHECK BY
OP-414	CMB	RJK

SUBMITTALS

NO.	DATE	ISSUE
0	10/01/02	TTV VISIT
1	06/05/03	Issued for Const. Review
2	09/25/03	REVISED PER COMMENTS
3	12/10/03	Minor Revision
4		
5		
6		

PLAN TO ACCOMPANY DRC REQUEST AND SPECIAL EXCEPTION PETITION

GRAPHIC SCALE
0 1 2

PROJECT

HONEYGO VILLAGE CENTER (aka CRESWELL PROPERTY)
SITE #BAN-254D
PROPOSED STEALTH DESIGN MONOPOLE
@ HONEYGO VILLAGE CENTER (aka CRESWELL PROPERTY)
9380 HONEYGO BOULEVARD
BALTIMORE, MARYLAND 21128
BALTIMORE COUNTY
DISTRICT #11 ACCOUNT #1103067500
COUNCILMANIC-5

SHEET TITLE

ANTENNA AND GPS ANTENNA MOUNTING DETAILS AND COAXIAL CABLE ROUTING DETAIL

SHEET NUMBER

D-3

STEALTH DESIGN MONOPOLE @ HONEYGO VILLAGE CENTER (aka CRESWELL PROPERTY) SITE #BAN-254D

1 ANTENNAS / SECTOR
EXPANSION CONFIGURATION

3 ANTENNAS PER SITE
12 ddTMA'S PER SITE
12 COAX RUNS PER SITE
6 DEdb BIAS PER SITE
3 RBS 2106 PER SITE
20 JUMPERS PER SECTOR

JUMPER DD TMA TO ANTENNA:
3' FOAM: PS #4602
DIN-m TO DIN-m
(SAME COLOR AS COAX)

DUAL DUPLEXOR TMA
(KRY 112 71/2)

JUMPER DD TMA TO COAX:
6' FOAM: PS #4621
DIN-m TO DIN-m
(SAME COLOR AS COAX)

COAX SIZE: SEE SMS RF
REPORT OR SITE DRAWING
DIN-f TO DIN-f

JUMPER DEdb TO COAX:
6' FOAM: PS #4621
DIN-m TO DIN-m

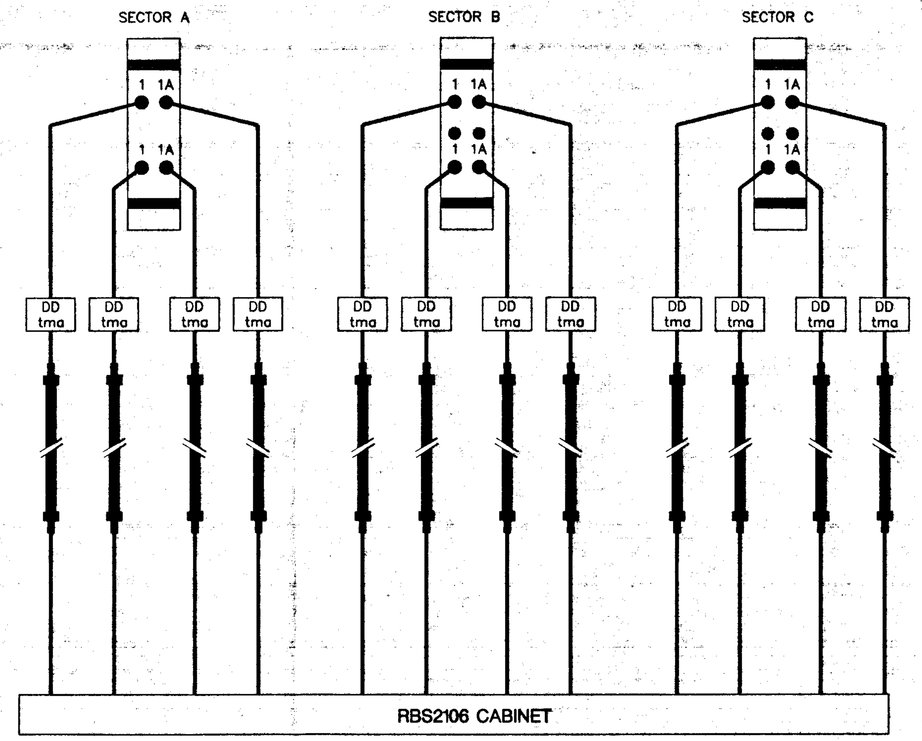

A LAYOUT DIAGRAM
D-2 SCALE: Not To Scale

ANTENNA AND COAXIAL CABLE SCHEDULE

ANTENNA MARK	SECTOR	ANTENNA	COAXIAL CABLE FEED LOCATION	DOWN-TILT	AZIMUTH	ANTENNA ℄ HEIGHT	COAXIAL CABLE LENGTH	COAXIAL CABLE	COLOR CODE HARD LINE	BOTTOM JUMPER CONFIGURATION COLOR CODE	
1-A(1Rx0)	1	EMS DR65-18-02DPL2Q (112" × 8" × 2.75")	BOTTOM/ TOP	2°	15°	95.7'	125' × 4	CELWAVE FLEXWELL 1 1/4"Φ FLC 114-50J	1 RED	Rx 1 (1 RED)	Tx 1 (1 RED/1 WHITE)
									4 RED	Rx 2A (2 RED)	Tx 2A (2 RED/1 WHITE)
								CELWAVE FLEXWELL 1 1/4"Φ FLC 114-50J	1 RED	Rx 1 (1 RED)	Tx 1 (1 RED/1 WHITE)
									4 RED	Rx 2A (2 RED)	Tx 2A (2 RED/1 WHITE)
1-B(2Rx0)	2	EMS DR65-18-02DPL2Q (112" × 8" × 2.75")	BOTTOM/ TOP	2°	135°	95.7'	125' × 4	CELWAVE FLEXWELL 1 1/4"Φ FLC 114-50J	1 GREEN	Rx 1 (1 GREEN)	Tx 1 (1 GREEN/1 WHITE)
									4 GREEN	Rx 2A (2 GREEN)	Tx 2A (2 GREEN/1 WHITE)
								CELWAVE FLEXWELL 1 1/4"Φ FLC 114-50J	1 GREEN	Rx 1 (1 GREEN)	Tx 1 (1 GREEN/1 WHITE)
									4 GREEN	Rx 2A (2 GREEN)	Tx 2A (2 GREEN/1 WHITE)
1-C(3Rx0)	3	EMS DR65-18-02DPL2Q (112" × 8" × 2.75")	BOTTOM/ TOP	2°	255°	95.7'	125' × 4	CELWAVE FLEXWELL 1 1/4"Φ FLC 114-50J	1 BLUE	Rx 1 (1 BLUE)	Tx 1 (1 BLUE/1 WHITE)
									4 BLUE	Rx 2A (2 BLUE)	Tx 2A (2 BLUE/1 WHITE)
								CELWAVE FLEXWELL 1 1/4"Φ FLC 114-50J	1 BLUE	Rx 1 (1 BLUE)	Tx 1 (1 BLUE/1 WHITE)
									4 BLUE	Rx 2A (2 BLUE)	Tx 2A (2 BLUE/1 WHITE)
					TOTAL LENGTH		1500'				

NOTES

1. ALL ANTENNAS TO BE FURNISHED WITH DOWNTILT BRACKETS. CONTRACTOR TO COORDINATE REQUIRED MECHANICAL DOWNTILT FOR EACH ANTENNA WITH RF ENGINEER.
2. ANTENNA CENTERLINE HEIGHT IS IN REFERENCE TO ELEVATION 0.0'.
3. CHECK WITH RF ENGINEER FOR LATEST ANTENNA TYPE & AZIMUTH.
4. CONTRACTOR SHALL VERIFY ANTENN A TYPE AND AZIMUTH WITH CONSTRUCTION MANAGER PRIOR TO CONSTRUCTION.
5. CONTRACTOR SHALL NOT INSTALL COLD SHRINK RAP INSULATORS UNTIL AFTER CABLES HAVE BEEN SWEPT.
6. THE COAXIAL CABLE SHALL NOT EXCEED 100.0' BETWEEN GROUND KITS.
7. THE USE OF ALTERNATE GROUNDING MEANS (SUCH AS LYNCOLE XIT) SHALL COMPLY WITH D.C.E.I. CONSTRUCTION SPECIFICATIONS & BUILDING PRACTICES.

COAXIAL CABLE SCHEDULE

DIAMETER	CABLE LENGTH	db LOSS / 100.0'	MIN. BENDING RADIUS
1/2" FLEX	0.0' - 10.0'	5.1	10"
1/2"	0.0' - 50.0'	3.5'	10"
7/8"	51.0' - 100.0'	1.95	18.0"
1 1/4"	101.0' - 200.0'	1.55	22.0"
1 5/8"	200.0' - UP	1.25	28.0"

1. CONTRACTOR WILL PROVIDE ANTENNA SERIAL NUMBER AFTER INSTALLATION AND FACTORY FIELD SWEEP TEST.
2. ALL CHANGES TO THIS SCHEDULE SHOULD BE APPROVED BY OMNIPOINT RF ENGINEERING
3. OMNIPOINT TO INSTALL A TOTAL OF 4 CABLE RUNS PER SECTOR

B ANTENNA AND COAXIAL CABLE SCHEDULE
D-2 SCALE: Not To Scale

INITIAL BUILD INSTALLATION
(3 SLANT45 ANTENNAS PER SECTOR,)
(6 ddTMA'S PER SECTOR,)
(12 COAX RUNS PER SECTOR,)
(3 deDB BIAS PER SECTOR,)
(1 RBS 2106 PER SITE)

ANTENNA

JUMPER DD TMA TO ANTENNA:
3' FOAM: PS# 4602
DIN-m to DIN-m

DUAL DUPLEXOR TMA (fullband)
(KRY 112 71/2)
(PS #135) FULLBAND BAND

JUMPER DD TMA TO COAX:
6' FOAM: PS#4621
DIN-m to DIN-m

COAX SIZE: SEE SMS RF REPORT OR SCHEDULE
DIN-f to DIN-f

JUMPER DEdb to COAX
6' FOAM: PS#4621
DIN-m to DIN-m

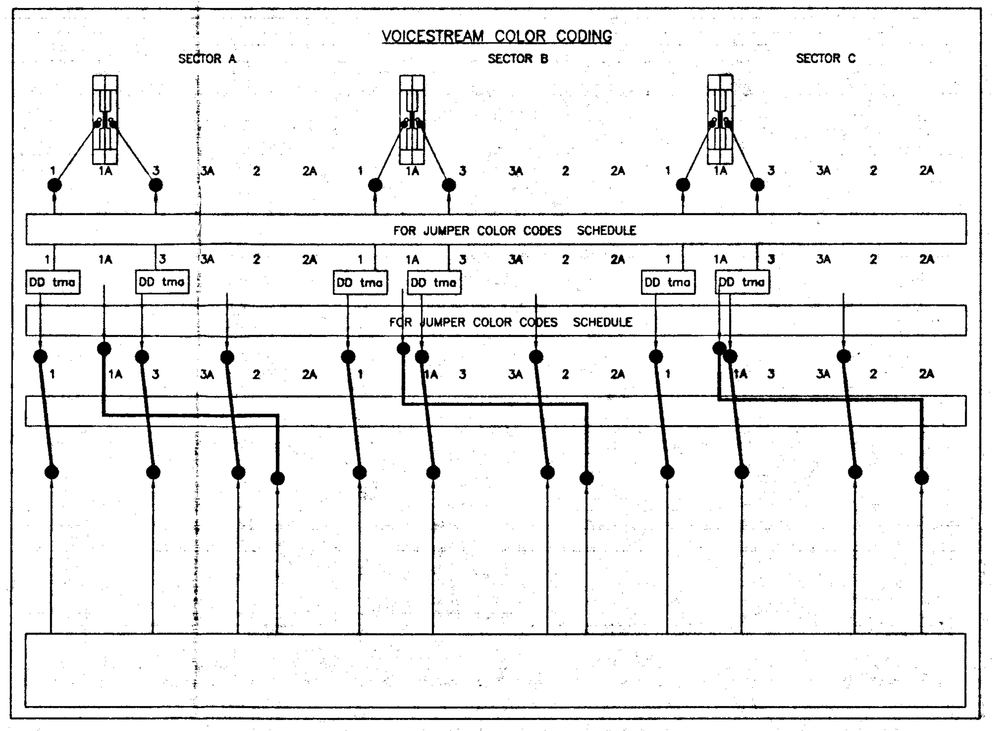

C LAYOUT DIAGRAM
D-2 SCALE: Not To Scale

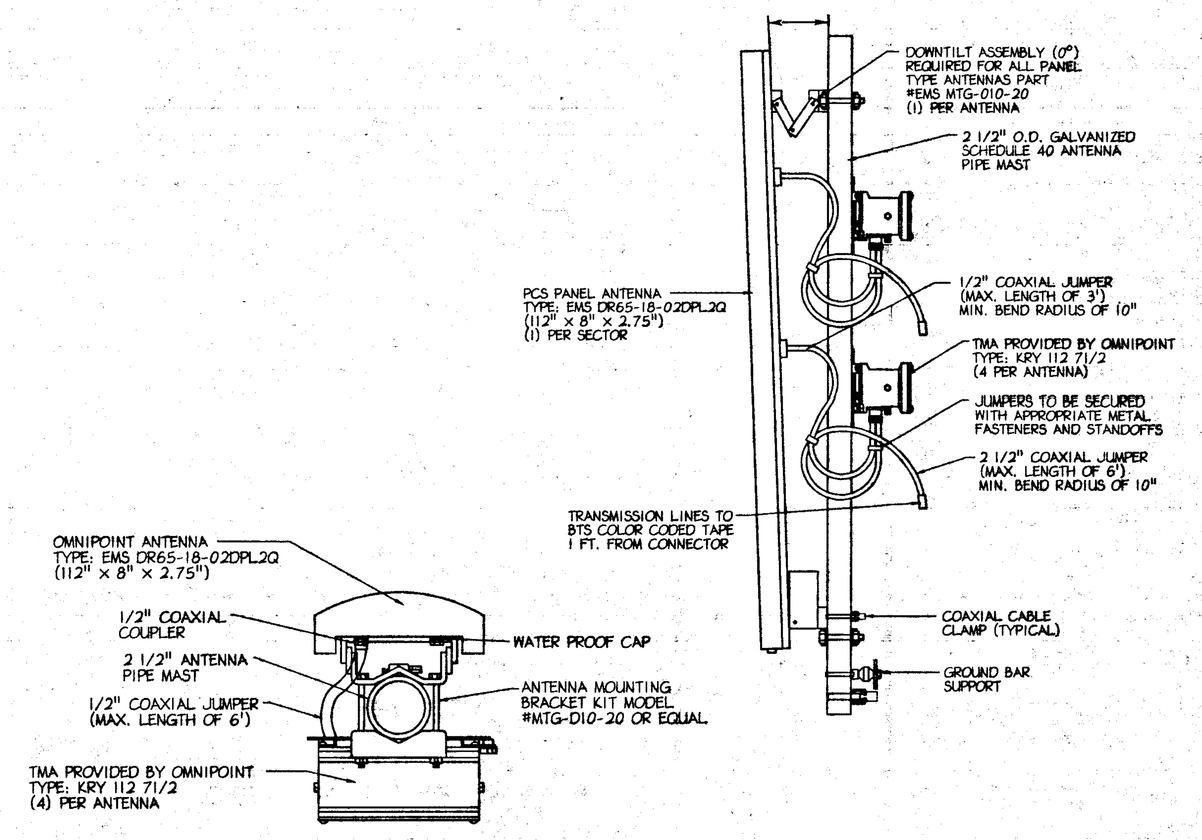

D ANTENNA DETAIL
D-2 SCALE: Not To Scale

Betzwood Associates PC
Architects & Engineers
Robin J. Kohn, AIA — Regis W. Kubit, PE
523 Kimberton Road, Suite 118 Phoenixville, PA 19460
tel. (610) 917-8831 fax (610) 917-8836
email mail@betzwood.com http://www.betzwood.com

SEAL BLOCK

I CERTIFY THAT THESE DOCUMENTS WERE PREPARED OR APPROVED BY ME, AND THAT I AM A DULY LICENSED ARCHITECT UNDER THE LAWS OF THE STATE OF MARYLAND.

BOARD OF ARCHITECTS 9374 Robin J. Kohn STATE OF MARYLAND

ROBIN J. KOHN AIA ~ MD. #9374 01.19.05

OMNIPOINT COMMUNICATIONS
CAP OPERATIONS, LLC
a subsidiary of T-MOBILE USA., INCORPORATED
fka VOICESTREAM WIRELESS CORPORATION

12050 BALTIMORE AVENUE BELTSVILLE, MD 20705
Tel. (240) 264-8600 FAX (240) 264-8610

APPROVALS
Omnipoint _____
LANDLORD _____
LEASING _____
R.F. _____
ZONING _____
CONSTRUCTION _____

NOTE

This Document is the Creation, Design, Property and Copyrighted Work of Omnipoint Communications Cap Operations, LLP a Subsidiary of T-Mobile USA, Inc., fka Voicestream Wireless. Any Duplication or use Without Express Written Consent is Strictly Prohibited.

PROJECT NO.	DRAWN BY	CHECK BY
OP-414	CMB	RJK

SUBMITTALS

NO.	DATE	ISSUE
0	10/01/02	TTV VISIT
1	06/05/03	Issued for Const. Review
2	09/25/03	REVISED PER COMMENTS
3	12/10/03	Minor Revision
4		
5		
6		

PLAN TO ACCOMPANY DRC REQUEST AND SPECIAL EXCEPTION PETITION

GRAPHIC SCALE
0 1 2

PROJECT
HONEYGO VILLAGE CENTER (aka CRESWELL PROPERTY)
SITE #BAN-254D
PROPOSED STEALTH DESIGN MONOPOLE
@ HONEYGO VILLAGE CENTER (aka CRESWELL PROPERTY)
9380 HONEYGO BOULEVARD
BALTIMORE, MARYLAND 21128
BALTIMORE COUNTY
DISTRICT #11 ACCOUNT #1103067500
COUNCILMANIC-5

SHEET TITLE
ANTENNA AND COAXIAL CABLE SCHEDULE AND DIAGRAMS AND ANTENNA DETAILS

SHEET NUMBER
D-2

STEALTH DESIGN MONOPOLE @ HONEYGO VILLAGE CENTER (aka CRESWELL PROPERTY) SITE #BAN-254D

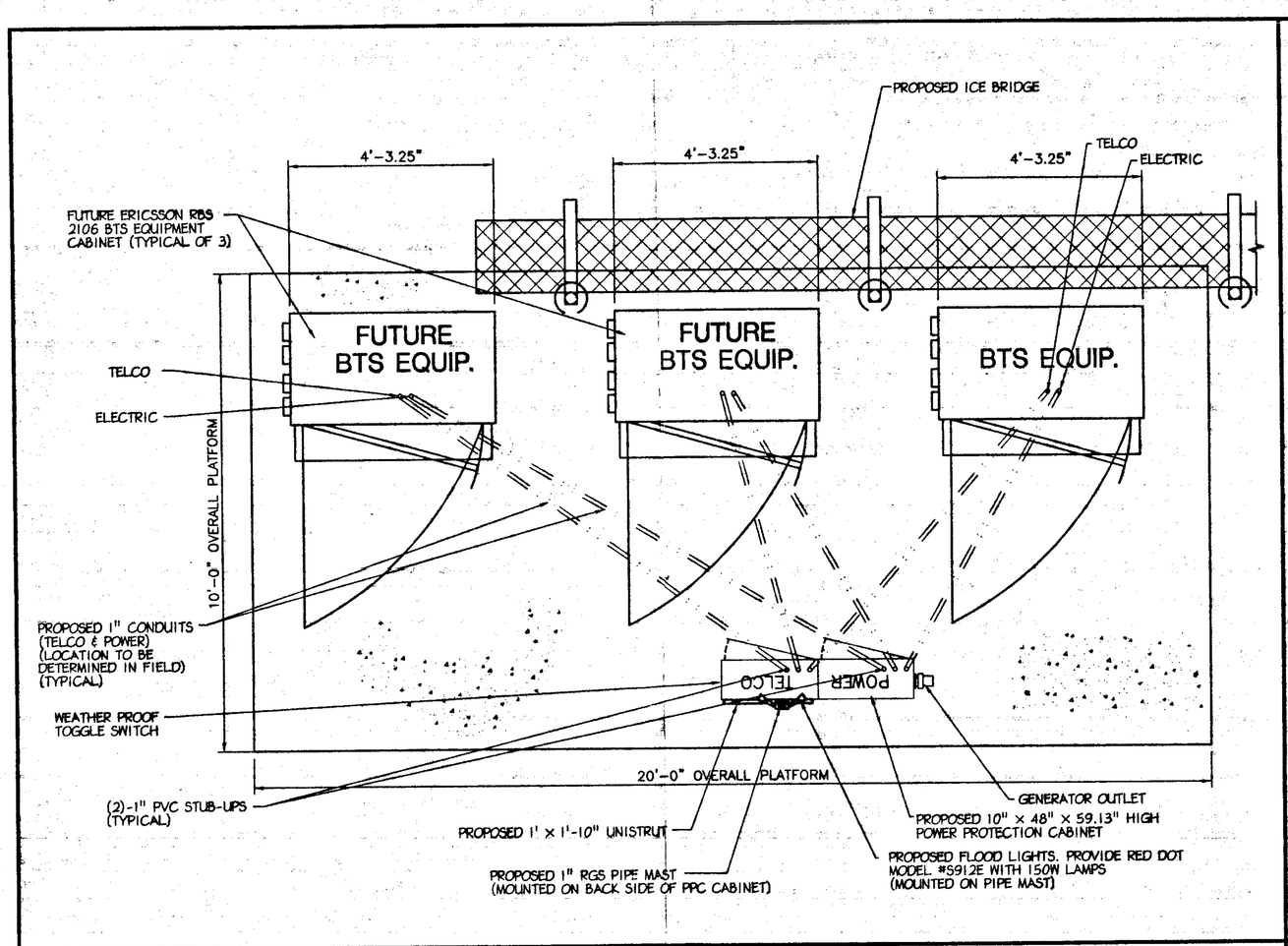

A D-1 EQUIPMENT LAYOUT DETAIL
SCALE: 1/2" = 1'-0"

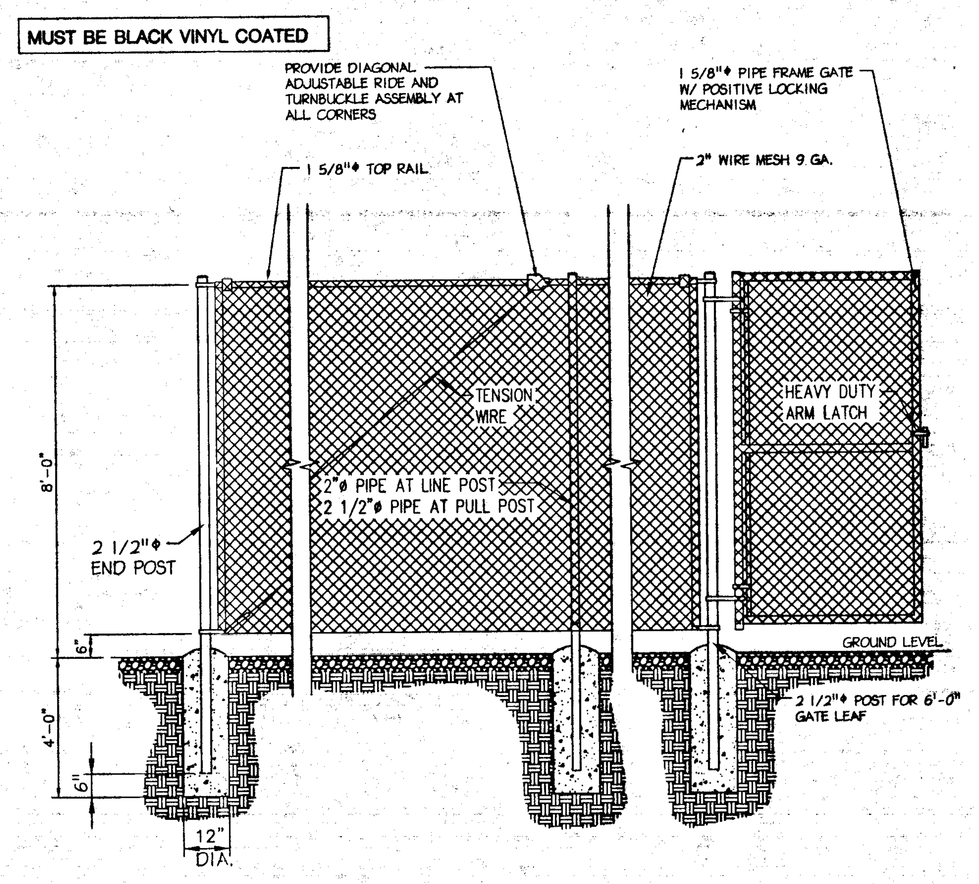

B D-1 COMPOUND FENCE DETAIL
SCALE: Not To Scale

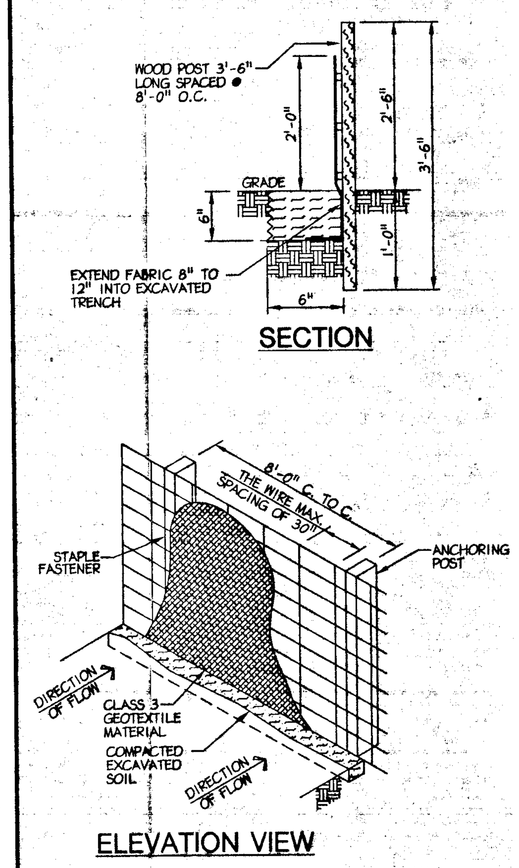

C D-1 SILT FENCE DETAIL
SCALE: Not To Scale If Required

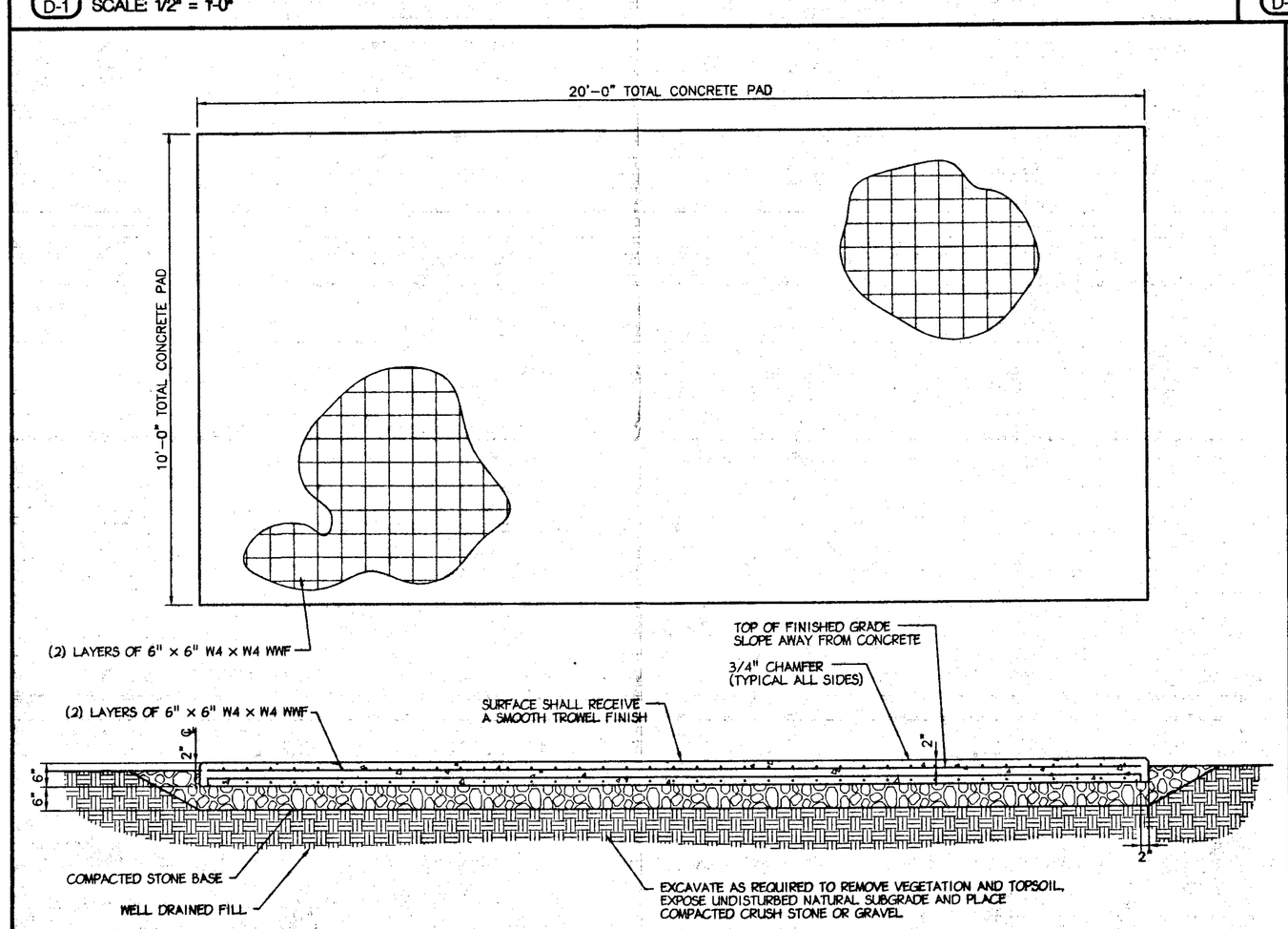

D D-1 CONCRETE PAD DETAIL
SCALE: 1/2" = 1'-0"

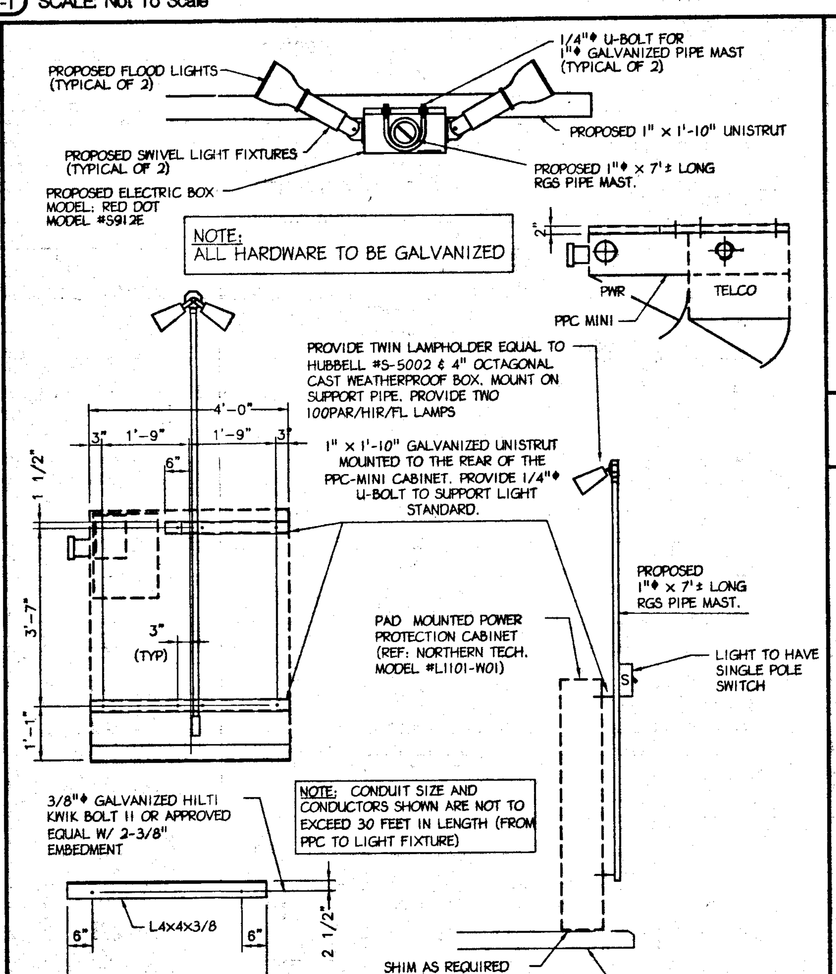

E D-1 POST MOUNTED LIGHT DETAIL
SCALE: Not To Scale

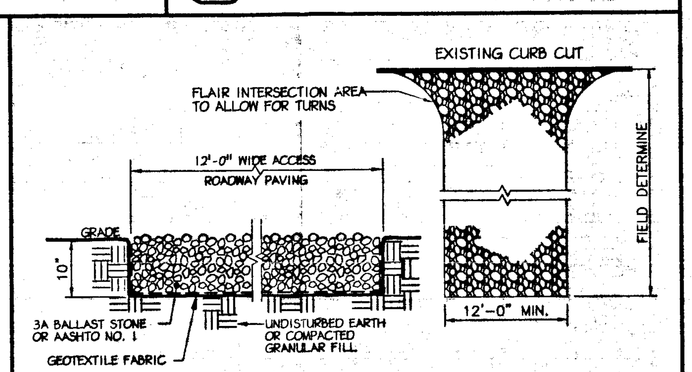

F D-1 TIRE SCRUBBER DETAIL
SCALE: Not To Scale If Required

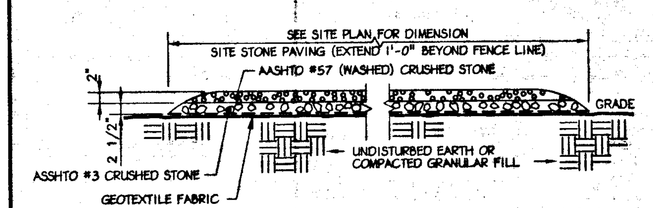

SITE COMPOUND STONE PAVING

G D-1 STONE PAVING
SCALE: Not To Scale If Required

Betzwood Associates PC
Architects & Engineers
Robin J. Kohn, AIA — Regis W. Kubit, PE
523 Kimberton Road, Suite 11B Phoenixville, PA 19460
tel. (610) 917-8831 fax (610) 917-8836
email mail@betzwood.com http://www.betzwood.com

SEAL BLOCK

I CERTIFY THAT THESE DOCUMENTS WERE PREPARED OR APPROVED BY ME, AND THAT I AM A DULY LICENSED ARCHITECT UNDER THE LAWS OF THE STATE OF MARYLAND.

BOARD OF ARCHITECTS 9374 ROBIN J. KOHN STATE OF MARYLAND

ROBIN J. KOHN AIA - MD. #9374 01.19.06

OMNIPOINT COMMUNICATIONS CAP OPERATIONS, LLC
a subsidiary of T-MOBILE USA, INCORPORATED
fka VOICESTREAM WIRELESS CORPORATION

12050 BALTIMORE AVENUE BELTSVILLE, MD 20705
Tel. (240) 264-5600 FAX (240) 264-5610

APPROVALS
Omnipoint
LANDLORD
LEASING
R.F.
ZONING
CONSTRUCTION

NOTE

This Document is the Creation, Design, Property and Copyrighted Work of Omnipoint Communications Cap Operations, LLP a Subsidiary of T-Mobile USA, Inc., fka Voicestream Wireless. Any Duplication or use Without Express Written Consent is Strictly Prohibited.

PROJECT NO.	DRAWN BY	CHECK BY
OP-414	CMB	RJK

SUBMITTALS

NO.	DATE	ISSUE
0	10/01/02	TTV VISIT
1	06/05/03	Issued for Const. Review
2	09/25/03	REVISED PER COMMENTS
3	12/10/03	Minor Revision
4		
5		
6		

PLAN TO ACCOMPANY DRC REQUEST AND SPECIAL EXCEPTION PETITION

GRAPHIC SCALE
0 1 2

PROJECT
HONEYGO VILLAGE CENTER (aka CRESWELL PROPERTY)
SITE #BAN-254D
PROPOSED STEALTH DESIGN MONOPOLE
ϕ HONEYGO VILLAGE CENTER (aka CRESWELL PROPERTY)
9380 HONEYGO BOULEVARD
BALTIMORE, MARYLAND 21128
BALTIMORE COUNTY
DISTRICT #11 ACCOUNT #1103067500
COUNCILMANIC-5

SHEET TITLE
CONSTRUCTION DETAILS

SHEET NUMBER
D-1

STEALTH DESIGN MONOPOLE ϕ HONEYGO VILLAGE CENTER (aka CRESWELL PROPERTY) SITE #BAN-254D

STRUCTURAL, GENERAL & SITE NOTES

1. THE GENERAL CONTRACTOR AND OR HIS SUB-CONSULTANT SHALL BE RESPONSIBLE FOR OBTAINING ALL PERMITS AND INSPECTION WHICH MAY BE REQUIRED FOR THE WORK BY THE ARCHITECT/ ENGINEER, THE STATE, COUNTY OR LOCAL GOVERNMENT AUTHORITY.
2. DESIGN REQUIREMENTS FOR THE ANTENNA SUPPORTING STRUCTURES ARE PER 2000 IBC – STRUCTURAL WIND LOAD STANDARDS
3. ALL STRUCTURAL STEEL SHALL BE HOT-DIPPED GALVANIZED AFTER FABRICATION.
4. FACILITY WILL BE INDEPENDENTLY POWERED WITH SEPARATE SERVICE & METER.
5. THE PROPOSED FACILITY IS UNMANNED AND VISITED ONCE TO TWICE A MONTH FOR ROUTINE MAINTENANCE. THEREFORE, POTABLE WATER, GAS & SANITARY SEWER SERVICES ARE NOT REQUIRED OR PROPOSED.
6. OUTDOOR STORAGE AND SOLID WASTE CONTAINERS ARE NOT PROPOSED.
7. APPLICANT PROPOSES AN UNMANNED, MODULAR, RADIO EQUIPMENT CABINETS & ASSOCIATED ANTENNAS MOUNTED TO AN PROPOSED STEALTH DESIGNED MONOPOLE.
8. FACILITY WILL NOT BE LIGHTED WITH EXCEPTION OF EMERGENCY CONDITIONS. A SINGLE SWITCHED LIGHT LOCATED NEAR EQUIPMENT
9. ANTENNA INSTALLATION SHALL BE CONDUCTED BY FIELD CREWS EXPERIENCED IN THE ASSEMBLY & ERECTION OF RADIO ANTENNAS, TRANSMISSION LINES & SUPPORT STRUCTURES.
10. STRUCTURAL STEEL SHALL CONFORM TO LATEST EDITION OF THE AISC SPECIFICATIONS FOR STRUCTURAL STEEL BUILDINGS – ALLOWABLE STRESS DESIGN AND PLASTIC DESIGN INCLUDING THE COMMENTARY AND THE CODE OF STANDARD PRACTICE.
11. STRUCTURAL STEEL PLATES AND SHAPES SHALL CONFORM TO ASTM A36. ALL STRUCTURAL STEEL PIPES SHALL CONFORM TO ASTM A53 GRADE 'B'. ALL STRUCTURAL STEEL COMPONENTS AND FABRICATED ASSEMBLIES SHALL BE HOT-DIPPED GALVANIZED AFTER FABRICATION.
12. WELDING SHALL BE IN ACCORDANCE WITH THE AMERICAN WELDING SOCIETY (AWS) D.1.1-92 STRUCTURAL WELDING CODE – STEEL WELD ELECTRODES SHALL BE E70XX.
13. ALL THREADED STRUCTURAL FASTENERS FOR ANTENNA SUPPORT ASSEMBLIES SHALL CONFORM TO ASTM A325. FASTENERS SHALL BE 5/8"ø MINIMUM BEARING TYPE CONNECTIONS WITH THREADS INCLUDED IN THE SHEAR PLANE. ALL EXPOSED FASTENERS, NUTS AND WASHERS SHALL BE GALVANIZED UNLESS OTHERWISE NOTED.
14. ALL COAXIAL CABLE CONNECTIONS AND TRANSMITTER EQUIPMENT SHALL BE AS SPECIFIED BY THE OWNER. THE CONTRACTOR SHALL FURNISH ALL CONNECTION HARDWARE REQUIRED TO SECURE THE CABLES.

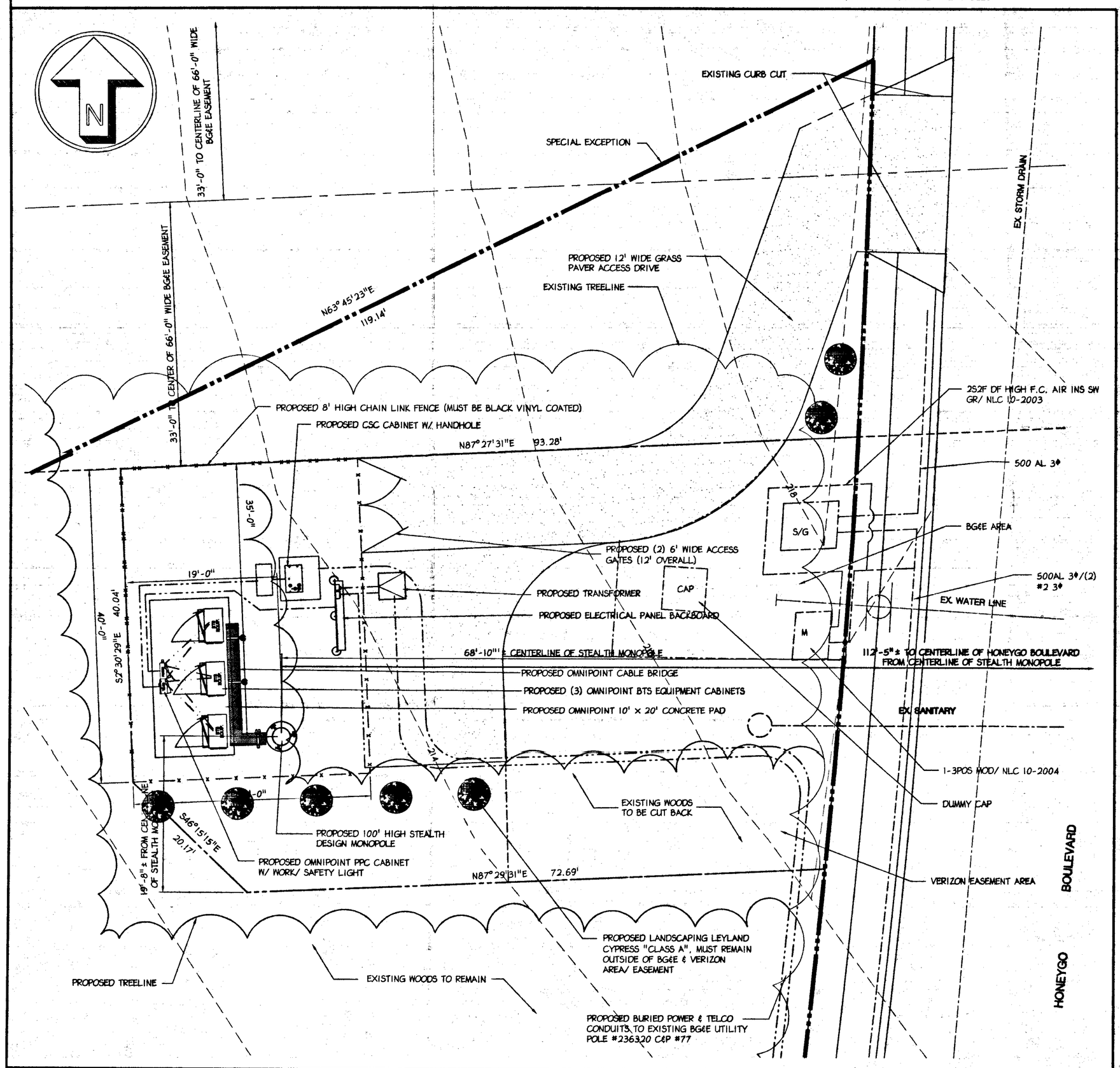

1 / Z-1 **ENLARGED COMPOUND PLAN**
SCALE: 1/8" = 1'-0"

GENERAL STRUCTURAL NOTES:

1. SPECIFICATIONS / CODES

   CONCRETE WORK SHALL BE PERFORMED IN ACCORDANCE WITH LATEST EDITION OF THE ACI CODE. STEEL WORK SHALL BE PERFORMED IN ACCORDANCE WITH AISC STEEL CONSTRUCTION MANUAL, 9th EDITION. WELDING SHALL BE PERFORMED IN ACCORDANCE WITH AMERICAN WELDING SOCIETY (AWS) D11-92 'STRUCTURAL WELDING CODE-STEEL. REINFORCING STEEL SHALL BE PLACED IN ACCORDANCE WITH THE CONCRETE REINFORCING STEEL INSTITUTE (CRSI), "MANUAL OF STANDARD PRACTICE".

2. MATERIALS

   CONCRETE fc = 3000 PSI
   REINFORCING STEEL: ASTM A615, GRADE 60.
   WIRE MESH: ASTM A 185
   STRUCTURAL STEEL: ASTM A 36
   ELECTRODES FOR WELDING: E 70xx
   GALVANIZING: ASTM A 153
   EXPANSION BOLTS: HILTI KWIK BOLT II, STAINLESS STEEL, 3/4" EMBEDMENT, OR AN APPROVED EQUAL.

3. GEOTECHNICAL:

   CONCRETE SLAB DESIGN IS BASED ON 2000 PSF SOIL BEARING CAPACITY. IF OTHER CONDITIONS EXIST, FOUNDATION SHALL BE REDESIGNED. CONTRACTOR SHALL HAVE SOIL BEARING CAPACITY VERIFIED BY A LICENSED PROFESSIONAL GEOTECHNICAL ENGINEER PRIOR TO INITIATION OF CONSTRUCTION ACTIVITIES.
   DL = 8,100 LBS.
   LL = 100 PSF.

   ALL BACKFILL SHALL BE THOROUGHLY COMPACTED TO A MINIMUM OF 95% MODIFIED PROCTOR DENSITY.

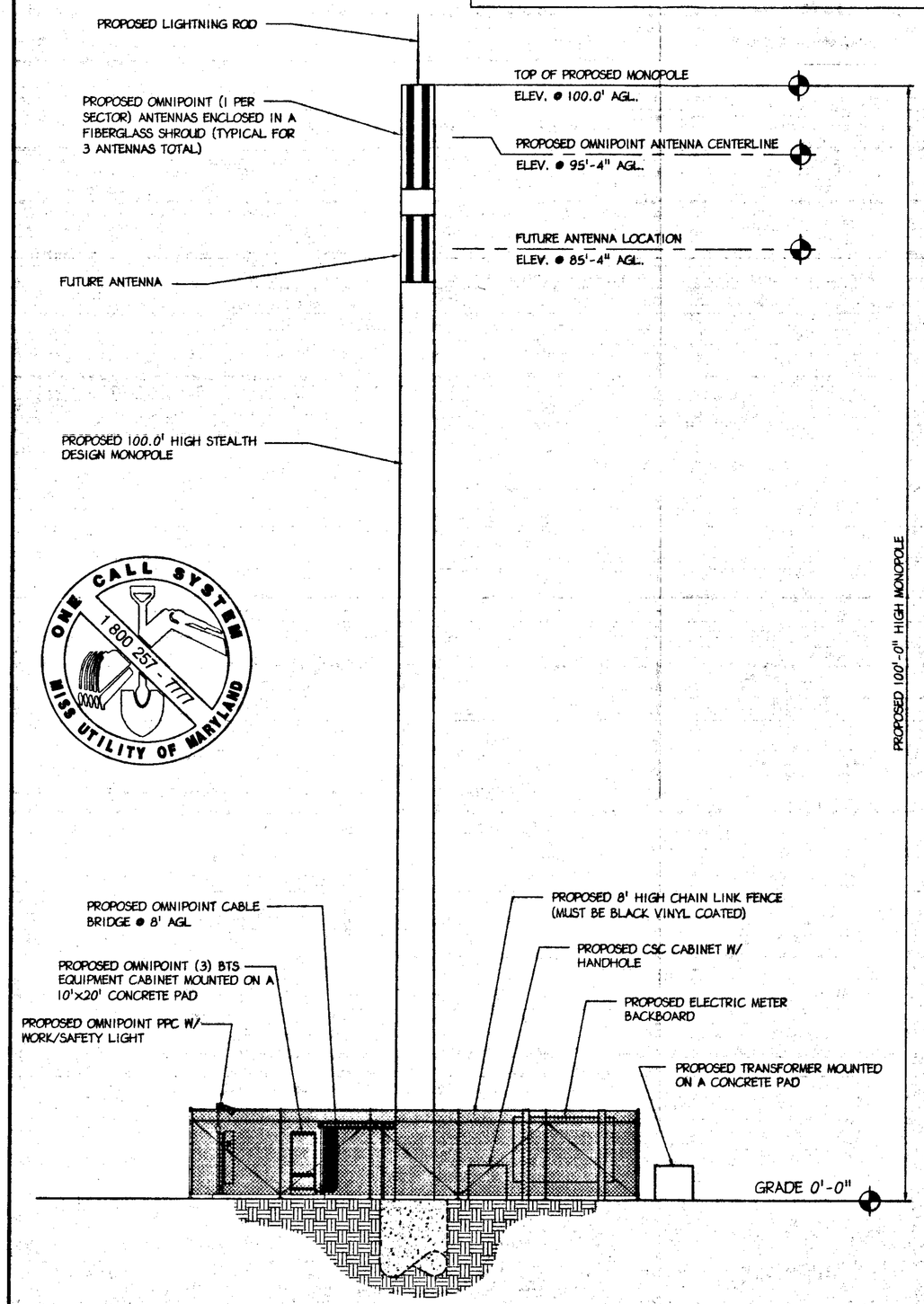

2 / Z-1 **SITE ELEVATION & NOTES**
SCALE: 1/8" = 1'-0"

Betzwood Associates PC
Architects & Engineers
Robin J. Kohn, AIA — Regis W. Kubit, PE
523 Kimberton Road, Suite 118 Phoenixville, PA 19460
tel. (610) 917-8831 fax (610) 917-8836
email mail@betzwood.com http://www.betzwood.com

SEAL BLOCK

I CERTIFY THAT THESE DOCUMENTS WERE PREPARED OR APPROVED BY ME, AND THAT I AM A DULY LICENSED ARCHITECT UNDER THE LAWS OF THE STATE OF MARYLAND.

BOARD OF ARCHITECTS 9374 ROBIN J. KOHN STATE OF MARYLAND

ROBIN J. KOHN AIA – MD. #9374 01.19.06

OMNIPOINT COMMUNICATIONS CAP OPERATIONS, LLC
a subsidiary of T-MOBILE USA, INCORPORATED
fka VOICESTREAM WIRELESS CORPORATION

12050 BALTIMORE AVENUE BELTSVILLE, MD 20705
Tel. (240) 264-8600 FAX (240) 264-8610

APPROVALS
Omnipoint
LANDLORD
LEASING
R.F.
ZONING
CONSTRUCTION

NOTE

This Document is the Creation, Design, Property and Copyrighted Work of Omnipoint Communications Cap Operations, LLP a Subsidiary of T-Mobile USA, Inc., fka Voicestream Wireless. Any Duplication or use Without Express Written Consent is Strictly Prohibited.

PROJECT NO.	DRAWN BY	CHECK BY
OP-414	CMB	RJK

SUBMITTALS

NO.	DATE	ISSUE
0	10/01/02	TTV VISIT
1	06/05/03	Issued for Const. Review
2	09/25/03	REVISED PER COMMENTS
3	12/10/03	Minor Revision
4		
5		
6		

PLAN TO ACCOMPANY DRC REQUEST AND SPECIAL EXCEPTION PETITION

GRAPHIC SCALE
0 1 2

PROJECT
HONEYGO VILLAGE CENTER (aka CRESWELL PROPERTY)
SITE #BAN-254D
PROPOSED STEALTH DESIGN MONOPOLE
● HONEYGO VILLAGE CENTER (aka CRESWELL PROPERTY)
9380 HONEYGO BOULEVARD
BALTIMORE, MARYLAND 21128
BALTIMORE COUNTY
DISTRICT #11 ACCOUNT #1103067500
COUNCILMANIC-5

SHEET TITLE
ENLARGED SITE PLAN AND ELEVATION

SHEET NUMBER
Z-1

PROPOSED STEALTH DESIGN MONOPOLE ● HONEYGO VILLAGE CENTER (aka CRESWELL PROPERTY) SITE #BAN-254D

SITE LEGEND

- SITE PROPERTY LINE
- ZONING DISTRICT BOUNDARY
- STREET OR ROAD
- RIGHT OF WAY
- OVERHEAD UTILITY LINES
- UNDERGROUND UTILITY LINES
- CHAINLINK FENCE
- EXISTING TREES & SHRUBS
- UTILITY POLE
- SPECIAL EXCEPTION

SITE DATA

LATITUDE ..... N 39°-24'-21.7" (USGS)
LONGITUDE ..... W 77°-26'-41.4" (USGS)
USGS MAP ..... WHITE MARSH, MD.
PROPERTY OWNER:
RITA LIMITED PARTNERSHIP
4750 OWINGS MILLS BOULEVARD
OWINGS MILLS, MD 21117
DEED REF.: 12293/ 445
TAX MAP ACCT. #
MAP: 72; GRID: 11; PARCEL: 78; GROUP: 82
BALTIMORE COUNTY
DISTRICT #11, ACCT. #1103067500
ZONING: DR 10.5

ZONING DESCRIPTION:

CONTAINING: 481,773 SQ. FT. OR 11.0605 ACRES OF LAND, MORE OR LESS, BEING A PORTION OF #9300 HONEYGO BOULEVARD, AND BEING LOCATED IN THE ELEVENTH ELECTION DISTRICT OF BALTIMORE COUNTY, MARYLAND.

EXCEPTING: TEMPORARY SLOPE EASEMENT 99-2083
66' PERPETUAL EASEMENT 1295/086
FOREST CONSERVATION EASEMENT AND FOREST BUFFER EASEMENT
100-YEAR FLOOD PLAIN RESERVATION, APPROX. 0.4790 ACRES
DRAINAGE AND UTILITY EASEMENT 11044/673, RW 87-278-14
STORMWATER MANAGEMENT RESERVATION #2, APPROX. 2.3848 ACRES
STORMWATER MANAGEMENT RESERVATION #1, APPROX. 0.6395 ACRES
DRAINAGE AND UTILITY EASEMENT AND TEMPORARY SLOPE EASEMENT 99-2082

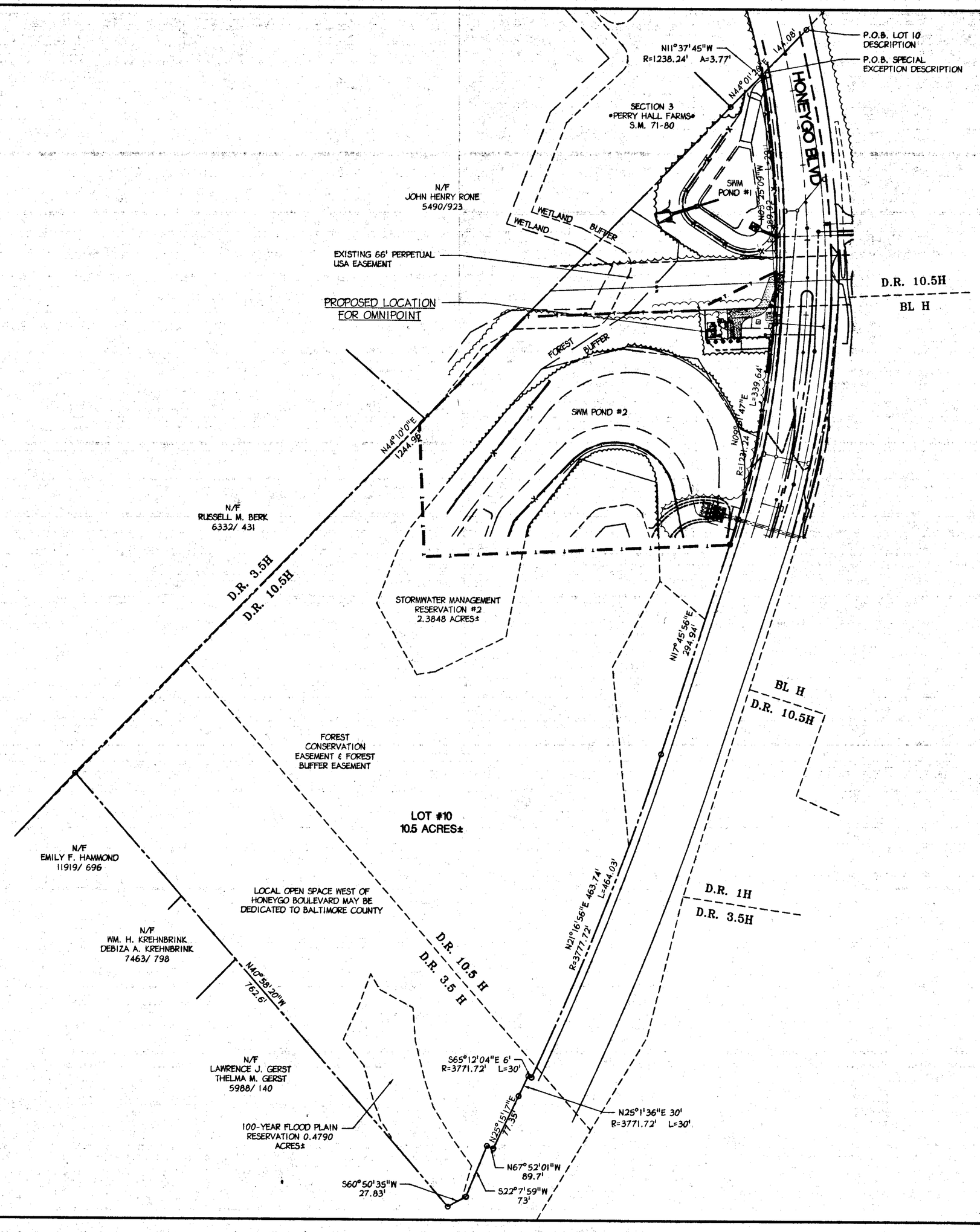

0 40 80 160 240 320
GRAPHIC SCALE
SCALE : 1 INCH = 80 FEET

1 LS-3 LOT 10 ENLARGEMENT PLAN
SCALE: 1" = 80'-0"

Betzwood Associates PC
Architects & Engineers
Robin J. Kohn, AIA — Regis W. Kubik, PE
523 Kimberton Road, Suite 118 Phoenixville, PA 19460
tel. (610) 917-8831 fax (610) 917-8836
email mail@betzwood.com http://www.betzwood.com

SEAL BLOCK

I CERTIFY THAT THESE DOCUMENTS WERE PREPARED OR APPROVED BY ME, AND THAT I AM A DULY LICENSED ARCHITECT UNDER THE LAWS OF THE STATE OF MARYLAND.

BOARD OF ARCHITECTS 9374 ROBIN J. KOHN STATE OF MARYLAND

ROBIN J. KOHN AIA – MD. #9374 01.19.05

OMNIPOINT COMMUNICATIONS CAP OPERATIONS, LLC
a subsidiary of T-MOBILE USA, INCORPORATED
fka VOICESTREAM WIRELESS CORPORATION

12050 BALTIMORE AVENUE BELTSVILLE, MD 20705
Tel. (240) 264-8600 FAX (240) 264-8610

APPROVALS
Omnipoint
LANDLORD
LEASING
R.F.
ZONING
CONSTRUCTION

NOTE

This Document is the Creation, Design, Property and Copyrighted Work of Omnipoint Communications Cap Operations, LLP a Subsidiary of T-Mobile USA, Inc., fka Voicestream Wireless. Any Duplication or use Without Express Written Consent is Strictly Prohibited.

PROJECT NO.	DRAWN BY	CHECK BY
OP-414	CMB	RJK

SUBMITTALS

NO.	DATE	ISSUE
0	10/01/02	TTV VISIT
1	06/05/03	Issued for Const. Review
2	09/25/05	REVISED PER COMMENTS
3	12/10/03	Minor Revision
4		
5		
6		

PLAN TO ACCOMPANY DRC REQUEST AND SPECIAL EXCEPTION PETITION

GRAPHIC SCALE
0 1 2

PROJECT
HONEYGO VILLAGE CENTER (aka CRESWELL PROPERTY)
SITE #BAN-254D
PROPOSED STEALTH DESIGN MONOPOLE
@ HONEYGO VILLAGE CENTER (aka CRESWELL PROPERTY)
9380 HONEYGO BOULEVARD
BALTIMORE, MARYLAND 21128
BALTIMORE COUNTY
DISTRICT #11 ACCOUNT #1103067500
COUNCILMANIC-5

SHEET TITLE
LOT 10 ENLARGEMENT ZONING PLAN

SHEET NUMBER
LS-3

PROPOSED STEALTH DESIGN MONOPOLE HONEYGO VILLAGE CENTER (aka CRESWELL PROPERTY) SITE #BAN-254D

SITE GENERAL NOTES

1. ALL EXISTING BUILDINGS, WATERCOURSES, MARSHES, ROCK OUTCROPS, WOODED AREAS, SINGLE TREES LARGER THAN 8" IN DIA. AT THREE FEET ABOVE GROUND LEVEL AND ALL OTHER SIGNIFICANT FEATURES HAVE BEEN SHOWN WITHIN THE LIMITS OF DISTURBANCE UNDERGROUND IMPROVEMETNS, IF ANY, & NOT VISIBLE OR MARKED BY "ONE CALL" ARE NOT SHOWN.
2. THE PROPOSED DEVELOPMENT IS UNMANNED AND THEREFORE DOES NOT REQUIRE A MEANS OF WATER SUPPLY OR SEWAGE DISPOSAL.
3. THE PROPOSED DEVELOPMENT WILL NOT IMPACT THE EXISTING STORM WATER DRAINAGE SYSTEM.
4. THE PROPOSED DEVELOPMENT DOES NOT INCLUDE SIGNS OF ADVERTISING.
5. THE PROPOSED DEVELOPMENT DOES NOT INCLUDE OUTDOOR STORAGE OR ANY SOLID WASTE RECEPTACLES.
6. NO LANDSCAPING WORK IS PROPOSED IN CONJUNCTION WITH THIS DEVELOPMENT OTHER THAN THAT SHOWN.
7. A COMPLETE BOUNDARY SURVEY OF THE HOST PARCEL HAS NOT BEEN PERFORMED BY BETZWOOD ASSOCIATES.
8. THERE IS NO GRADING WHICH SLOPES GREATER THAN 5% IN THE PROPOSED AREA OF DISTURBANCE
9. THE INCREASE IN STORM WATER RUNOFF DUE TO THE INCREASE IN IMPERVIOUS AREA IS INSIGNIFICANT. EXISTING DRAINAGE PATTERNS WILL NOT BE ALTERED. THEREFORE, DRAINAGE STRUCTURES ARE NOT PROPOSED.
10. THERE IS ONE OFF-STREET PARKING SPACE PROPOSED WITH THIS APPLICATION.
11. ALL CONSTRUCTION FOR SITE IMPROVEMENTS SHALL CONFORM TO APPLICABLE SPECIFICATIONS, STANDARDS AND REQUIREMENTS OF THE GOVERNMENTAL OR UTILITY AUTHORITY HAVING JURISDICTION.
12. EXISTING ON-SITE VEGETATION SHALL BE PRESERVED TO THE MAXIMUM EXTENT.
13. ALL INFORMATION ON THIS PLAN IS NOT TO BE USED FOR BOUNDARY, TITLE OR CONSTRUCTION PURPOSES.
14. BOUNDARY INFORMATION WAS OBTAINED FROM DRAWINGS PREPARED BY MORRIS & RITCHE ASSOCIATES, INC, FINAL PLAT ONE HONEYGO VILLAGE CENTER DATED 9/18/01 & ALTERNATE DEVELOPMENT PLAN DATED 11/06/02.
15. UTILITIES SHOWN ON PLAN ARE TAKEN FROM OWNERS RECORDS AND FIELD LOCATION OF VISIBLE SURFACE FEATURES. THE EXISTENCE, EXTENT AND EXACT HORIZONTAL AND VERTICAL LOCATIONS OF UTILITIES HAS NOT BEEN VERIFIED. ANY CONTRACTOR PERFORMING WORK ON THIS SITE MUST CONTACT MD ONE CALL UTILITY AT LEAST 48 HOURS PRIOR TO COMMENCING WORK.
16. PROPOSED TOWER DEVELOPEMENT IS UNMMANNED AND THEREFORE DOES NOT GENERATE TRAFFIC OF SIGNIFICANCE (ON AVERAGE ONE-TWO VEHICLE PER MONTH WILL VISIT FACILITY FOR MAINTENENCE).

SITE GENERAL NOTES

1. EXISTING ZONING = DR 10.5 (DENSITY - RESIDENTAL)
2. EXISTING USE = SHOPPING CENTER / MIXED USE RESIDENTIAL
3. TOTAL AREA OF PARCEL =54.0074 ACRES, 2352544.92 SQ. FT.
4. TOTAL DISTURBED AREA = 2375± SQUARE FEET, TOTAL LEASE AREA: 1200 SQUARE FEET.
5. TO REMAIN SHOPPING CENTER MAINTENANCE
6. THE PROPERTY SHOWN HEREON IS OWNED BY: RITA LIMITED PARTNERSHIP, BY DEED RECORDED AMONG THE LAND RECORDS OF BALTIMORE COUNTY IN LIBER 12293, FOLIO 445
7. TAX MAP: 72, GRID: 11 PARCEL: 78, GROUP: 82
8. TOPOGRAPHY SHOWN HERON IS DEPICTED FROM A PLAN BY MORRIS & RITCHE ASSOCIATES, INC. DATED 11/06/02 FINAL PLAT ONE HONEYGO VILLAGE CENTER
9. THE CONTRACTOR SHALL NOTE THAT IN CASE OF A DISCREPANCY BETWEEN THE SCALED AND FIGURED DIMENSIONS SHOWN ON THESE PLANS, THE FIGURED DIMENSIONS SHALL GOVERN.
10. PROPOSED DEVELEPMENT IS NOT LOCATED WITHIN THE CRITICAL AREA OF THE CHESAPEAKE BAY AND FLOODPLAIN.

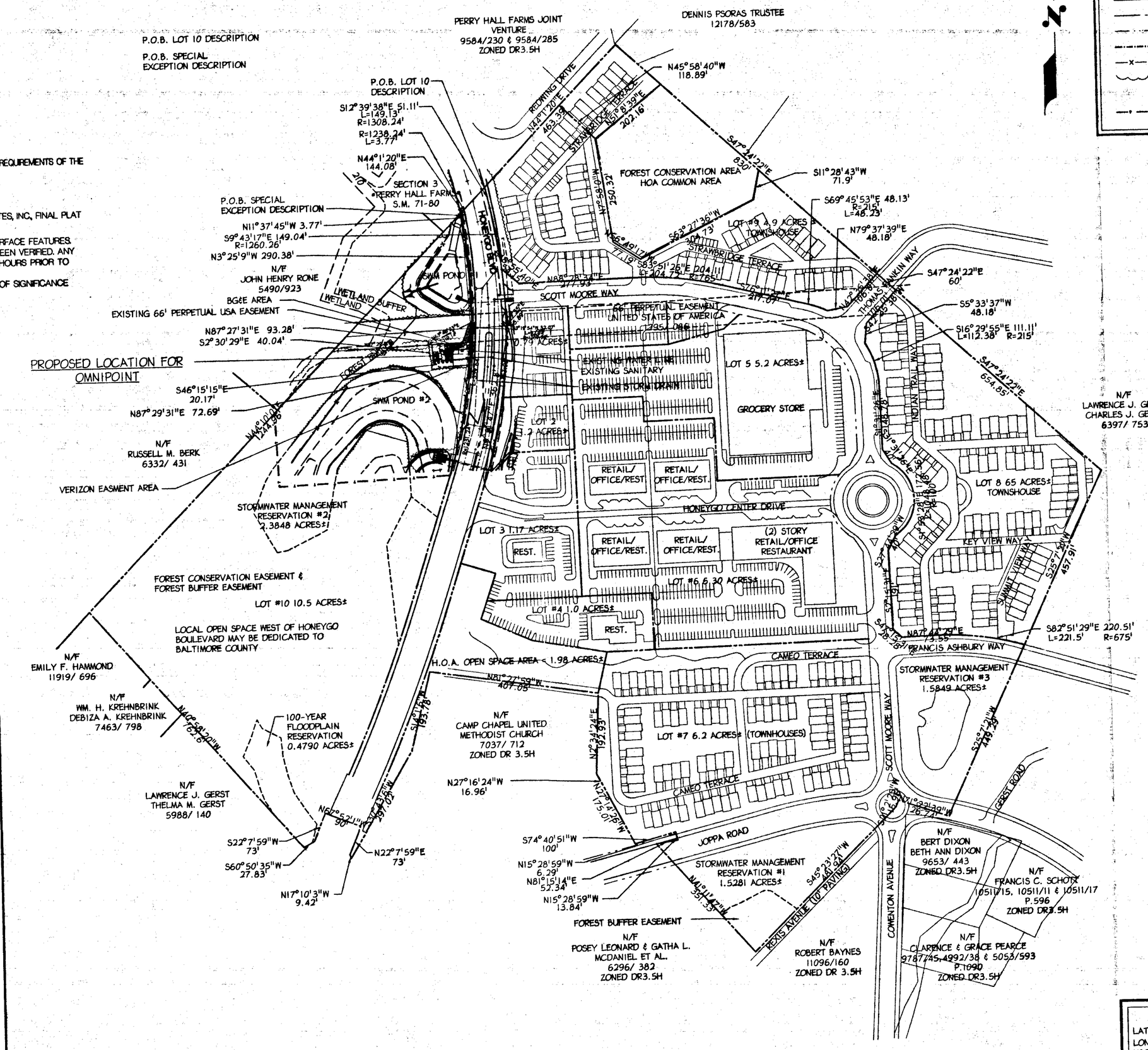

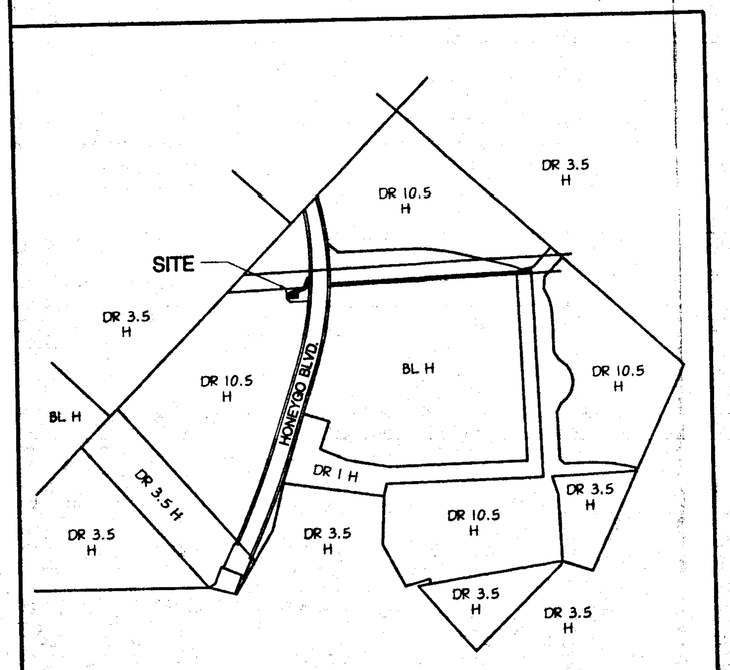

VICINITY MAP 1" = 400'-0"

SITE LEGEND

- SITE PROPERTY LINE
- BUILDING SETBACKS
- DRAINAGE OR ACCESS EASEMENT
- STREET OR ROAD
- RIGHT OF WAY
- OVERHEAD UTILITY LINES
- UNDERGROUND UTILITY LINES
- CHAINLINK FENCE
- EXISTING TREES & SHRUBS
- UTILITY POLE
- SPECIAL EXCEPTION

SITE DATA

LATITUDE ..... N 39°-24'-21.7" (USGS)
LONGITUDE ..... W 77°-26'-41.4" (USGS)
USGS MAP ..... WHITE MARSH, MD.
PROPERTY OWNER:
RITA LIMITED PARTNERSHIP
4750 OWINGS MILLS BOULEVARD
OWINGS MILLS, MD 21117
DEED REF.: 12293/ 445
TAX MAP ACCT. #
MAP: 72, GRID: 11, PARCEL: 78, GROUP: 82
BALTIMORE COUNTY
DISTRICT #11, ACCT. #1103067500
ZONING: DR 10.5

1 SITE PLAN
LS-2 SCALE: 1" = 150'-0"

Betzwood Associates PC
Architects & Engineers
Robin J. Kohn, AIA — Regis W. Kubik, PE
523 Kimberton Road, Suite 118 Phoenixville, PA 19460
tel. (610) 917-8831 fax (610) 917-8836
email mail@betzwood.com http://www.betzwood.com

SEAL BLOCK

I CERTIFY THAT THESE DOCUMENTS WERE PREPARED OR APPROVED BY ME, AND THAT I AM A DULY LICENSED ARCHITECT UNDER THE LAWS OF THE STATE OF MARYLAND.

BOARD OF ARCHITECTS 9374 STATE OF MARYLAND — ROBIN J. KOHN

ROBIN J. KOHN AIA - MD. #9374 01.19.05

OMNIPOINT COMMUNICATIONS CAP OPERATIONS, LLC
a subsidiary of T-MOBILE USA, INCORPORATED
fka VOICESTREAM WIRELESS CORPORATION
12050 BALTIMORE AVENUE BELTSVILLE, MD 20705
Tel. (240) 264-8600 FAX (240) 264-8610

APPROVALS
Omnipoint
LANDLORD
LEASING
R.F.
ZONING
CONSTRUCTION

NOTE

This Document is the Creation, Design, Property and Copyrighted Work of Omnipoint Communications Cap Operations, LLP a Subsidiary of T-Mobile USA, Inc., fka Voicestream Wireless. Any Duplication or use Without Express Written Consent is Strictly Prohibited.

PROJECT NO.	DRAWN BY	CHECK BY
OP-414	CMB	RJK

SUBMITTALS

NO.	DATE	ISSUE
0	10/01/02	TTV VISIT
1	06/05/03	Issued for Const. Review
2	09/25/03	REVISED PER COMMENTS
3	12/10/03	Minor Revision
4		
5		
6		

PLAN TO ACCOMPANY DRC REQUEST AND SPECIAL EXCEPTION PETITION

GRAPHIC SCALE
0 1 2

PROJECT
HONEYGO VILLAGE CENTER (aka CRESWELL PROPERTY)
SITE #BAN-254D
PROPOSED STEALTH DESIGN MONOPOLE
@ HONEYGO VILLAGE CENTER (aka CRESWELL PROPERTY)
9380 HONEYGO BOULEVARD
BALTIMORE, MARYLAND 21128
BALTIMORE COUNTY
DISTRICT #11 ACCOUNT #1103067500
COUNCILMANIC-5

SHEET TITLE
ZONING PLAN AND NOTES

SHEET NUMBER
LS-2

PROPOSED STEALTH DESIGN MONOPOLE HONEYGO VILLAGE CENTER (aka CRESWELL PROPERTY) SITE #BAN-254D

ZONING HISTORY: PDM XI-843
ALTERNATE DEVELOPMENT PLAN DRC 070802G
DRC 070802G
DRC 0807001

THE PROPOSED DEVELOPMENT IS NOT LOCATED WITHIN A FLOODPLAIN AND IS NOT WITHIN THE THE CRITICAL AREA OF THE CHESAPEAKE BAY.

SPECIAL EXCEPTION NOTES

1. PER SECTION 426.1, THE PROPOSED STEALTH DESIGN MONOPOLE IS DEFINED AS A TOWER: "TOWER: A SELF-SUPPORTING, GUYED OR FREESTANDING STRUCTURE THAT IS DESIGNED AND CONSTRUCTED FOR THE PURPOSE OF SUPPORTING ONE OR MORE WIRELESS TELECOMMUNICATIONS ANTENNAS FOR TELEPHONE, RADIO AND SIMILIAR COMMUNICATION PURPOSES, WHETHER SUCH SUPPORT IS THE PRIMARY OR SECONDARY PURPOSE OF TE STRUCTURE."

2. PER SECTION 426.2, THE PROPOSALS MEETS THE LEGISLATIVE POLICY FOR SITING OF WIRELESS TELECOMMUNICATIONS ANTENNAS AND TOWERS, AS DOCUMENTED IN THE REPORT OF THE FEBRUARY 25, 2003 MEETING OF THE BALTIMORE COUNTY TOWER REVIEW COMMITTEE.

3. THE EXCEPTIONS OF 426.3 ARE NOT APPLICABLE TO THE PROPOSED TOWER.

4. PER SECTION 426.4, THE TOWER REVIEW COMMITTEE REVIEWED THE APPLICATION AND VOTED FOR A POSITIVE RECOMMENDATION AT ITS MEETING OF FEBRUARY 25, 2003.

5. PER SECTION 426.5, THE PROPOSED TOWER IS PERMITTED BY SPECIAL EXCEPTION IN THE DR 10.5 ZONE.

6. PER SECTION 426.6A, THE TOWER MEETS ALL SETBACK REQUIREMENTS; 426.6B, NO STROBOSCOPIC LIGHTS WILL BE PLACED ON THE TOWER AND IT WILL BE PAINTED BROWN TO BLEND WITH THE TREES; 426.C, THE EQUIPMENT AREA WILL BE FENCED AND SCREENED AS RECOMMENDED BY THE BALTIMORE COUNTY PLANNING OFFICE; 426.6D, THE OWNER OF THE TOWER SHALL CERTIFY THAT THE TOWER MEETS ALL SAFETY REQUIREMENTS UPON COMPLETION AND EVERY FIVE YEARS; 426.6E, THE TOWER OWNER SHALL SUBMIT ANNUALLY TO THE TOWER COORDINATOR WRITTEN CERTIFICATION AS TO THE NUMBER OF PROVIDERS AND ANTENNAS ON THE TOWER.

7. PER SECTION 426.7, APPLICANT SHALL PROVIDE A SECURITY BOND OR FEE AS DETERMINED BY THE COUNTY.

8. PER SECTION 426.8, THE TOWER AND SUPPORTING EQUIPMENT SHALL BE MAINTAINED IN GOOD WORKING CONDITION WITH NO UNSAFE OR HAZARDOUS CONDITIONS.

9. PER SECTION 426.9, AN EXISTING TOWER OR STRUCTURE WAS NOT AVAILABLE. THE TRANSMISSION TOWERS CROSSING THE PARCEL COULD NOT BE USED FOR THE TELECOMMUNICATIONS DUE TO AN AGREEMENT BETWEEN BG&E AND THE DEPARTMENT OF DEFENSE. THE PROPOSED TOWER WILL BE LOCATED CLOSE TO THE FOREST BUFFER DEFINED FOR THE HONEYGO VILLE CENTER AND CLOSE TO THE TRANSMISSION TOWERS. DUE TO THESE FEATURES, THE TOWER WILL BE LESS VISIBLE ON THE DR 10.5 PORTION OF THE SITE THAN ON THE BL-H PORTION. NO OTHER MEDIUM OR HIGH INTENSITY ZONE WAS AVAILABLE FOR THE PROPOSED TOWER. THE TOWER HAS BEEN DESIGNED TO ENABLE ONE ADDITIONAL CARRIER TO LOCATE WITHIN THE TOWER. DUE TO THE STEALTH DESIGN, IT IS NOT TECHNICALLY FEASIBLE TO ACCOMMODATE A SECOND CARRIER. THE TOWER WILL BE PAINTED BROWN TO BLEND WITH THE TREES IN THE AREA. THE TOWER IS LOCATED ON A LOT OF AT LEAST 3 ACRES.

10. PER SECTION 426.10, APPLICANT IS AWARE OF THE CONDITIONS ENABLING THE CODE OFFICIAL TO REMOVE A TOWER.

11. PER SECTION 426.11, NO VARIANCE IS REQUESTED FOR THE TOWER.

12. PER SECTION 502.1, THE PROPOSED TOWER WILL BE UNMANNED. IT WILL GENERATE APPROXIMATELY TWO TRIPS PER MONTH FOR MAINTENANCE PURPOSES. APPLICANT WILL COMPLY WITH ALL FEDERAL REQUIREMENTS REGARDING RF EMISSIONS AS A CONDITION OF MAINTAINING ITS LICENSE TO OPERATE. THE ANTENNAS WILL BENEFIT THE SUBSCRIBING PUBLIC BY ENABLING CONTINUOUS TELECOMMUNICATIONS SERVICES FOR PERSONNAL, BUSINESS AND EMERGENCY PURPOSES. THE PROPOSED TOWER WILL NOT:

A. BE DETRIMENTAL TO THE HEALTH, SAFETY OR GENERAL WELFARE OF THE LOCALITY.
B. TEND TO CREATE CONGESTION IN ROADS, STREET OR ALLEYS THEREIN;
C. CREATE A POTENTIAL HAZARD FROM FIRE, PANIC OR OTHER DANGER;
D. INTERFERE WITH ADEQUATE PROVISIONS FOR SCHOOLS, PARKS, WATER, SEWERAGE, TRANSPORATION OR OTHER PUBLIC REQUIREMENTS, CONVENIENCES OR IMPROVEMENTS;
E. INTERFERE WITH ADEQUATE LIGHT AND AIR
F. BE INCONSISTENT WITH THE PURPOSES OF THE PROPERTY'S ZONING CLASSIFICATION NO IN ANY OTHER WAY INCONSISTENT WITH THE SPIRIT AND INTENT OF THE ZONING REGULATIONS; NOR
G. BE INCONSISTENT WITH THE IMPERMEABLE SURFACE AND VEGETATIVE RETENTION PROVISIONS OF THE ZONING REGULATIONS.

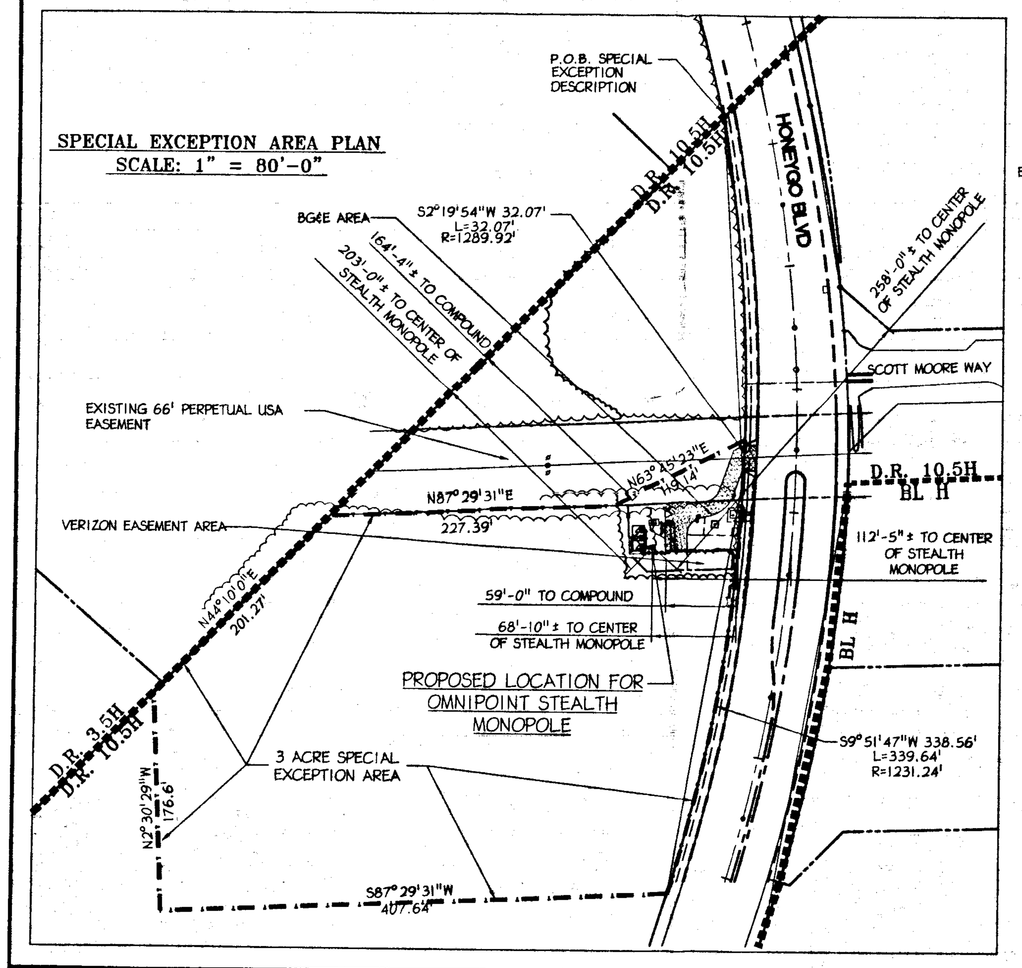

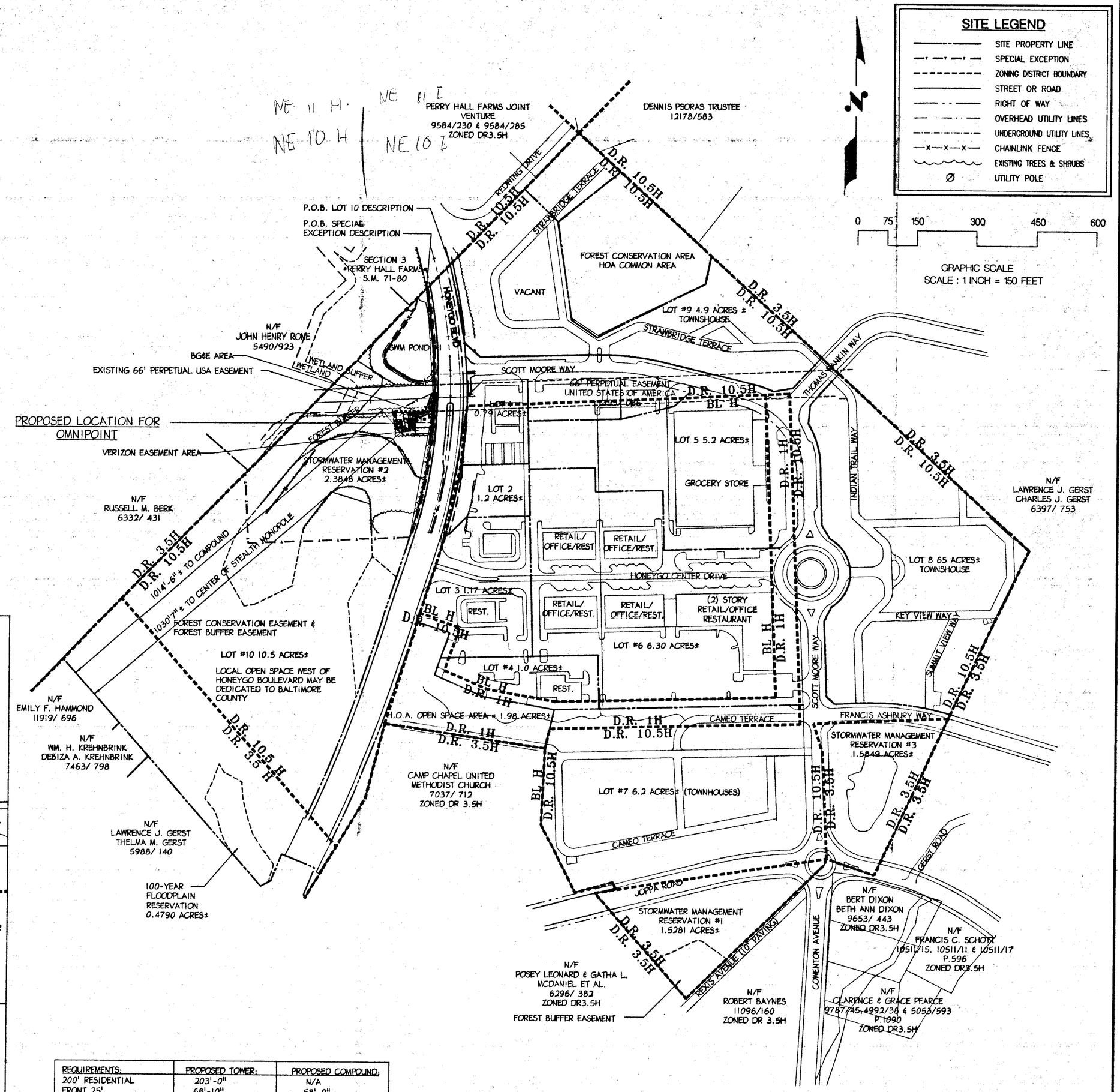

REQUIREMENTS:	PROPOSED TOWER:	PROPOSED COMPOUND:
200' RESIDENTIAL	203'-0"	N/A
FRONT 25'	68'-10"	58'-0"
SIDE 20'	1030'-7"	1014'-6"
CORNER STREET SIDE 35'	68'-10"	58'-0"
REAR 50'	203'-0"	164'-4"

1 LS-1 ZONING PLAN
SCALE: 1" = 150'-0"

SITE LEGEND

- SITE PROPERTY LINE
- SPECIAL EXCEPTION
- ZONING DISTRICT BOUNDARY
- STREET OR ROAD
- RIGHT OF WAY
- OVERHEAD UTILITY LINES
- UNDERGROUND UTILITY LINES
- CHAINLINK FENCE
- EXISTING TREES & SHRUBS
- UTILITY POLE

Betzwood Associates PC
Architects & Engineers
Robin J. Kohn, AIA — Regis W. Kubik, PE
523 Kimberton Road, Suite 118 Phoenixville, PA 19460
tel. (610) 917-8831 fax (610) 917-8836
email ma@betzwood.com http://www.betzwood.com

SEAL BLOCK

I CERTIFY THAT THESE DOCUMENTS WERE PREPARED OR APPROVED BY ME, AND THAT I AM A DULY LICENSED ARCHITECT UNDER THE LAWS OF THE STATE OF MARYLAND.

BOARD OF ARCHITECTS 9374 ROBIN J. KOHN STATE OF MARYLAND

ROBIN J. KOHN AIA - MD. #9374 01.19.05

OMNIPOINT COMMUNICATIONS CAP OPERATIONS, LLC
a subsidiary of T-MOBILE USA, INCORPORATED
fka VOICESTREAM WIRELESS CORPORATION
12050 BALTIMORE AVENUE BELTSVILLE, MD 20705
Tel. (240) 264-8800 FAX (240) 264-8810

APPROVALS
Omnipoint
LANDLORD
LEASING
R.F.
ZONING
CONSTRUCTION

NOTE

This Document is the Creation, Design, Property and Copyrighted Work of Omnipoint Communications Cap Operations, LLP a Subsidiary of T-Mobile USA, Inc., fka Voicestream Wireless. Any Duplication or use Without Express Written Consent is Strictly Prohibited.

PROJECT NO.	DRAWN BY	CHECK BY
OP-414	CMB	RJK

SUBMITTALS

NO.	DATE	ISSUE
0	10/01/02	TTV VISIT
1	06/05/03	Issued for Const. Review
2	09/25/03	REVISED PER COMMENTS
3	12/10/03	Minor Revision
4		
5		
6		

PLAN TO ACCOMPANY DRC REQUEST AND SPECIAL EXCEPTION PETITION

GRAPHIC SCALE
0 1 2

PROJECT
HONEYGO VILLAGE CENTER (aka CRESWELL PROPERTY)
SITE #BAN-254D
PROPOSED STEALTH DESIGN MONOPOLE
• HONEYGO VILLAGE CENTER (aka CRESWELL PROPERTY)
9380 HONEYGO BOULEVARD
BALTIMORE, MARYLAND 21128
BALTIMORE COUNTY
DISTRICT #11 ACCOUNT #1103067500
COUNCILMANIC-5

SHEET TITLE
ZONING PLAN AND NOTES

SHEET NUMBER
LS-1

STEALTH DESIGN MONOPOLE • HONEYGO VILLAGE CENTER (aka CRESWELL PROPERTY) SITE #BAN-254D

OMNIPOINT COMMUNICATIONS CAP OPERATIONS, LLC

a subsidiary of T-MOBILE USA., INCORPORATED,

fka VOICESTREAM WIRELESS CORPORATION

STEALTH DESIGN MONOPOLE @ HONEYGO VILLAGE CENTER (aka CRESWELL PROPERTY)

9380 HONEYGO BOULEVARD
BALTIMORE, MARYLAND 21128

SITE #BAN-254D

PROPOSED TELECOMMUNICATIONS FACILITY

1. OMNIPOINTS ANTENNAS, AND THE ANTENNAS OF ANY FUTURE CARRIER WILL BE INSIDE THE MONOPOLE.
2. THERE ARE NO OTHER STRUCTURES WITHIN THE 3 ACRE ARE NOR DOES THIS APPLICATION CONTEMPLATE THE BUILDING OF ANY OTHER STRUCTURE.

LEGEND

ADJ	ADJUSTABLE
AGL	ABOVE GROUND LEVEL
AMSL	ABOVE MEAN SEA LEVEL
ANT	ANTENNA
APPROX	APPROXIMATE
AZI	AZIMUTH
BTS	BASE TRANSMISSION STATION
CAB	CABINET
CONC	CONCRETE
CONT	CONTINUOUS
CONST	CONSTRUCTION
COAX	COAXIAL
CJ	CONSTRUCTION JOINT
DIA	DIAMETER
DTL	DETAIL
DWG	DRAWING
EA	EACH
ELEC	ELECTRIC
ELEV	ELEVATION
EQ	EQUAL
EQUIP	EQUIPMENT
EXT	EXTERIOR
FF	FINISH FLOOR
FTG	FOOTING
GA	GAUGE
GALV	GALVANIZED
GC	GENERAL CONTRACTOR
GRND	GROUND
INT	INTERIOR
LG	LONG
MAX	MAXIMUM
MFG	MANUFACTURER
MIN	MINIMUM
MTL	METAL
NIC	NOT IN CONTRACT
NTS	NOT TO SCALE
OC	ON CENTER
OHP	OVERHEAD POWER
OHT	OVERHEAD TELCO
PCS	PERSONAL COMMUNICATIONS SERVICES
PWR	POWER
SF	SQUARE FOOT
SHT	SHEET
SIM	SIMILAR
SS	STAINLESS STEEL
STL	STEEL
TELCO	TELEPHONE COMPANY
TO	TOP OF
TYP	TYPICAL
VIF	VERIFY IN FIELD
UON	UNLESS OTHERWISE NOTED
USGS	U.S. GEOLOGICAL SURVEY
WWF	WELDED WIRE FABRIC
A-1	ANTENNA MARK NUMBER
(E)	EXISTING
(N)	NEW
(P)	PROPOSED
℄	CENTERLINE
℘	PLATE
B/W	BARBED WIRE
C/L	CHAINLINK
ø	DIAMETER
W/	WITH

SECTION NUMBER / SHEET NUMBER — DRAWING SECTION

SECTION NUMBER / SHEET NUMBER — DETAIL

SECTION NUMBER / SHEET NO. — DETAIL ENLARGEMENT

REVISION NUMBER

DATUM ELEVATION

MATCH LINE

(TB) TEST BORING
(WP) WORK POINT
(DP) DATUM POINT

CAST IN PLACE OR PRE-CAST CONCRETE

LIGHT WEIGHT CONCRETE

EARTH: UNDISTURBED

EARTH: BACKFILL

CRUSHED STONE, GRAVEL OR POROUS FILL

PLASTER CEMENT, SAND, GROUT

ROCK OR STONE

RIGID INSULATION

STEEL

METAL, ALUMINUM, ECT.

CONCRETE MASONRY UNIT

BRICK

DRAWING INDEX

T-1	TITLE SHEET
LS-1	ZONING PLAN AND NOTES
LS-2	ZONING PLAN AND NOTES
LS-3	LOT 10 ENLARGEMENT ZONING PLAN
Z-1	ENLARGED COMPOUND PLAN AND SITE ELEVATION
D-1	CONSTRUCTION DETAILS
D-2	ANTENNA DETAIL, ANTENNA AND COAXIAL CABLE SCHEDULE AND DIAGRAMS
D-3	COAXIAL CABLE ROUTING DETAIL, ANTENNA AND GPS ANTENNA MOUNTING DETAILS
D-4	CONSTRUCTION DETAILS, CABLE BRIDGE DETAILS AND NOTES
E-1	GROUNDING PLAN, ELECTRIC AND TELCO NOTES AND DIAGRAMS
E-2	GROUNDING RISER DIAGRAM AND GROUNDING NOTES
E-3	CABLE CONFIGURATIONS, MARKINGS, DETAILS AND GROUNDING ROD DETAILS

PROJECT DESCRIPTION:
THE PROPOSED WORK WILL CONSISTS OF ATTACHING A ANTENNAS INCLOSED INSIDE A FIBERGLASS SHROUD TO A PROPOSED 100'-0" HIGH STEALTH DESIGNED MONOPOLE TO BE USED AS A MOUNTING FOR (9) PANEL ANTENNAS, EACH 72" x 8" x 2.75". A 10' x 20' CONCRETE PAD WILL BE PLACED AT THE BASE OF THE PROPOSED STEALTH DESIGNED MONOPOLE LOCATED INSIDE A PROPOSED 30' x 40', 8' HIGH CHAIN LINK FENCED COMPOUND TO MOUNT (3) EQUIPMENT CABINETS 4'-3" x 2'-4" x 5'-8" HIGH AND RELATIVE EQUIPMENT. ACCESS TO SITE WILL BE UTILIZATION ON A PROPOSED 12'-0" WIDE STONE DRIVE PER AGREEMENT W/ LAND OWNER.

DRIVING DIRECTIONS:
FROM T-MOBILE OFFICE TAKE US-1 BALTIMORE AVENUE (NORTHEAST) (1.98 MILES). TURN RIGHT ONTO CONTEE RD. (1.13 MILES). TURN RIGHT ONTO MD-197 S/LAUREL BOWIE RD. (1.33 MILES). TURN SHARP LEFT TO TAKE THE B/W PKWY. NORTH RAMP. MERGE ONTO MD-295 N. (15.89 MILES). TAKE THE I-895/HARBOR TUNNEL THRWY EXIT. MERGE ONTO HARBOR TUNNEL THRWY. (10.16 MILES). HARBOR TUNNEL THRWY BECOMES I-95 N. (5.80 MILES). TAKE THE MD-43 E/WHITE MARSH BLVD. EAST EXIT - EXIT #67A - TOWARDS US-40. MERGE ONTO MD-43 E. TAKE THE RAMP TOWARD MD-7/PHILADELPHIA RD. KEEP RIGHT AT THE FORK IN THE RAMP. MERGE ONTO INDUSTRIAL PARK RD. TURN RIGHT ONTO MD-7/PHILADELPHIA RD. STAY STRAIGHT TO GO ONTO MD-7/PHILADELPHIA RD. TURN LEFT ONTO CONENTON AVE. (1.52 MILES). TURN LEFT ONTO E. JOPPA RD.

VICINITY MAP

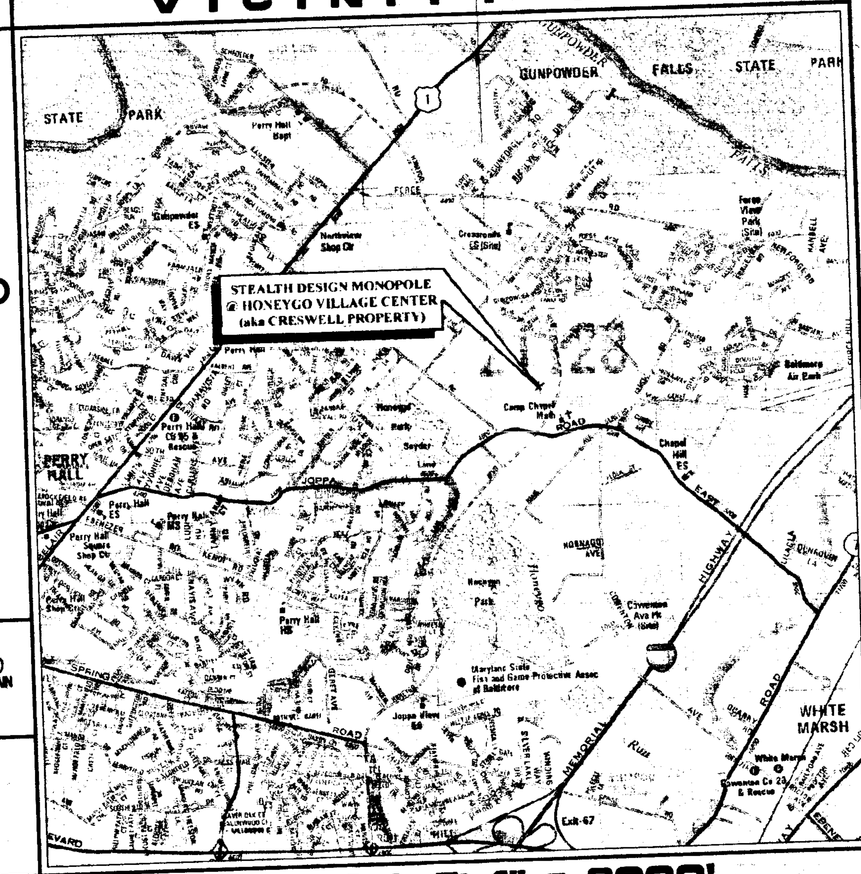

SCALE: 1" = 2000'

PROJECT SUMMARY

SITE NUMBER: #BAN-254D
SITE NAME: HONEYGO VILLAGE CENTER (aka CRESWELL PROPERTY)
SITE ADDRESS: 9380 HONEYGO BOULEVARD BALTIMORE, MARYLAND 21128
TAX NUMBER: MAP #72 GRID #11 PARCEL #78 GROUP #82
DEED BOOK REF: 12293/ 445
CURRENT ZONING: DR 10.5
JURISDICTION: BALTIMORE COUNTY DISTRICT II ACCOUNT 1103067500

PROPERTY OWNER: RITA LIMITED PARTNERSHIP
4750 OWINGS MILLS BOULEVARD
OWINGS MILLS, MARYLAND 21117

CONTACT PERSON: SCOTT ROUCK
(410) 581-9405 x 252

APPLICANT: OMNIPOINT COMMUNICATIONS CAP OPERATIONS, LLC
a subsidairy of T-MOBILE USA INCORPORATED
fka VOICESTREAM WIRELESS CORPORATION
12050 BALTIMORE AVENUE
BELTSVILLE MARYLAND 20705
CONTACT: TELE: 240-264-8600

SITE DATA:
LATITUDE: N 39-24'-21.7" (USGS)
LONGITUDE: W 77-26'-41.4" (USGS)
ELEVATION: 210'± AMSL @ BASE
USGS MAP: WHITE MARSH, MARYLAND
REF. MAP: BALTIMORE COUNTY
PAGE: MAP #29
GRID: G-5

ZONING HISTORY: PDM XI-843
ALTERNATE DEVELOPMENT PLAN DRC 070802G
DRC 070802G
DRC 080700I

T.T.V. PARTICIPANTS:

TTV REP:	NAME	COMPANY	TEL. NO.
R.F. ENG.	D. LORA	T-MOBILE	
A & E REP.	J. CLAUSEN	BTZWD.	610-917-8831
S.A.Q. REP.	K. LARKIN	T-MOBILE	
CONST. REP.	B. BAYS	T-MOBILE	
ZONING REP.	H. MORRISON	T-MOBILE	
OWNER REP.			
OTHER			

BTS TYPE: ERICSSON RBS 2102 COU-A

Betzwood Associates PC
Architects & Engineers
Robin J. Kohn, AIA
Regis W. Kubit, PE
523 Kimberton Road, Suite 11B Phoenixville, PA 19460
tel. (610) 917-8831 fax (610) 917-8836
email mail@betzwood.com http://www.betzwood.com

SEAL BLOCK

I CERTIFY THAT THESE DOCUMENTS WERE PREPARED OR APPROVED BY ME, AND THAT I AM A DULY LICENSED ARCHITECT UNDER THE LAWS OF THE STATE OF MARYLAND.

BOARD OF ARCHITECTS 9374 ROBIN J. KOHN STATE OF MARYLAND

ROBIN J. KOHN AIA – MD. #9374 01.19.05

OMNIPOINT COMMUNICATIONS CAP OPERATIONS, LLC
a subsidiary of T-MOBILE USA., INCORPORATED
fka VOICESTREAM WIRELESS CORPORATION
12050 BALTIMORE AVENUE BELTSVILLE, MD 20705
Tel. (240) 264-8600 FAX (240) 264-8810

APPROVALS
Omnipoint
LANDLORD
LEASING
R.F.
ZONING
CONSTRUCTION

NOTE:
This Document is the Creation, Design, Property and Copyrighted Work of Omnipoint Communications Cap Operations, LLP a Subsidiary of T-Mobile USA, Inc., fka Voicestream Wireless. Any Duplication or use Without Express Written Consent is Strictly Prohibited.

PROJECT NO.	DRAWN BY	CHECK BY
OP-414	GMB	RJK

SUBMITTALS

NO.	DATE	ISSUE
0	10/01/02	TTV VISIT
1	06/05/03	Issued for Const. Review
2	09/25/03	REVISED PER COMMENTS
3	12/10/03	Minor Revision
4		
5		
6		

PLAN TO ACCOMPANY DRC REQUEST AND SPECIAL EXCEPTION PETITION

GRAPHIC SCALE
0 1 2

PROJECT
HONEYGO VILLAGE CENTER (aka CRESWELL PROPERTY)
SITE #BAN-254D
PROPOSED STEALTH DESIGN MONOPOLE
@ HONEYGO VILLAGE CENTER (aka CRESWELL PROPERTY)
9380 HONEYGO BOULEVARD
BALTIMORE, MARYLAND 21128
BALTIMORE COUNTY
DISTRICT #11 ACCOUNT #1103067500
COUNCILMANIC-5

SHEET TITLE
TITLE SHEET

SHEET NUMBER
T-1

STEALTH DESIGN MONOPOLE @ HONEYGO VILLAGE CENTER (aka CRESWELL PROPERTY) SITE #BAN-254D