IN RE: DEVELOPMENT PLAN HEARING N and S sides Cotter Road, W Bollinger Road 6th Election District 3rd Councilmanic District **(Rauh Property)**	* * * *	BEFORE THE HEARING OFFICER FOR BALTIMORE COUNTY
Freefollie Farms LLC *Developer/Petitioner*	*	06-303 **Case No. ~~XV-874~~ and 08-045-SPH**

* * * * * * * * * * * * * * * * * * *

HEARING OFFICER'S OPINION & DEVELOPMENT PLAN ORDER

This matter comes before this Hearing Officer/Deputy Zoning Commissioner for Baltimore County, for a public hearing on a Development Plan proposal submitted in accordance with the development review and approval process contained in Article 32, Title 4, of the Baltimore County Code (B.C.C.). The Developer of the property, Freefollie Farms LLC (Developer), submitted for approval a development plan prepared by Matis Warfield, Inc., known as "Rauh Property." The Developer is proposing the development of the subject property into 12 single family detached dwellings (nine dwellings in the R.C.4 zone and three dwellings in the R.C.2 zone) on 205.80 acres of land, more or less. The property is consists of 81.09 acres zoned R.C.2, 84.19 acres zoned R.C.4, and 40.51 acres zoned R.C.8. The subject property is located between Middletown Road and Cotter Road and west of Bollinger Road in the Freeland area of Baltimore County. It is also bisected by Flintstone Road. The proposed development is more particularly described on the redlined Development Plan, which was marked and accepted into evidence as Developer's Exhibit 2.

In addition to the Development Plan Hearing, Special Hearing relief is requested pursuant to Section 500.7 of the Baltimore County Zoning Regulations (B.C.Z.R.) to approve a waiver pursuant to Baltimore County Code Section 32-4-107. Baltimore County Code Section 32-4-302(a) requires an applicant to provide the public improvements or private improvements required by the County. In this case, the Developer is seeking a waiver of the requirement to widen portions of Flintstone Road.

ORDER RECEIVED FOR FILING
Date 11-14-07
By PB

The property was posted with Notice of Hearing Officer's Hearing, as well as Notice of the Special Hearing, on September 3, 2007, for 20 working days prior to the hearing, in order to notify all interested citizens of the date and location of the hearing. The property was also published with Notice of the Special Hearing on September 18, 2007.

As to the history of the project, a concept plan of the proposed development was prepared and Concept Plan Conference (CPC) was held on April 16, 2007, at 9:00 AM in the County Office Building. As the name suggests, the concept plan is a schematic representation of the proposed subdivision and is initially reviewed by and between representatives of the Developer and the reviewing County Agencies at the CPC. Thereafter, as is also required in the development review process, notice of a Community Input Meeting (CIM) is posted and scheduled during evening hours at a location near the proposed subdivision to provide residents of the area an opportunity to review and comment firsthand on the plan. In this case, the CIM was held on May 10, 2007 at 7:00 PM at the Prettyboy Elementary School, where representatives of the Developer and the County attended, as well as a number of interested persons from the community. Subsequently, a development plan is prepared, based upon the comments received at the CPC and the CIM, and the development plan is submitted for further review at a Development Plan Conference (DPC), which, again, is held between the Developer's consultants and County agency representatives to further review and scrutinize the plan. The Development Plan Conference occurred on September 12, 2007. The Hearing Officer's Hearing for this proposed development was then held on October 4, 2007 in Room 106 of the County Office Building.

It should be noted at this juncture that the role of each reviewing County agency in the development review and approval process is to independently and thoroughly review the development plan as it pertains to their specific area of concern and expertise. These agencies provide comments to the plan and make determinations where necessary as to whether the plan complies with applicable Federal, State, and/or County laws and regulations pertaining to development and related issues. In addition, these agencies carry out this role throughout the entire development plan and approval process.

ORDER RECEIVED FOR FILING
Date 11-14-07
By PB

Appearing at the requisite public hearing in support of the Development Plan approval request was John Canoles on behalf of the Developer, Robert C. Douglas, Esquire, the attorney representing the Developer, and Steve Warfield with Matis Warfield, Inc., the professional engineer who prepared the redlined Development Plan. Also appearing in support of the Development Plan were Sally Malena with Human & Rohde, Inc., the Landscape Architect who prepared the Schematic Landscape Plan for the property, and Carl Wilson with The Traffic Group, the Professional Traffic Engineer who prepared a traffic study of the subject property.

Several interested persons residing near the location of the proposed Development Plan attended the hearing as well. These individuals included Richard and Carol West of 2927 Cotter Road, Colleen Callahan of 2720 Flintstone Road, and Reb and Beverly Scavone of 20220 Middletown Road.

Also in attendance were representatives of the various Baltimore County reviewing agencies, including the following individuals from the Department of Permits and Development Management: Darryl Putty (Project Manager), Dennis Kennedy (Bureau of Development Plans Review), Joe Merrey (Zoning Review Office), and Brad Knatz (Bureau of Land Acquisition). Also appearing on behalf of the County were Dave Lykens from the Department of Environmental Protection and Resource Management (DEPRM); Lloyd Moxley from the Office of Planning; and Bruce Gill from the Department of Recreation & Parks. In addition, written comments were received from Lt. Roland Bosley, Jr. of the Baltimore County Fire Marshal's Office and Steven D. Foster on behalf of the Maryland State Highway Administration. These and other agency remarks are contained within the case file.

Pursuant to B.C.C. Sections 32-4-227 and 32-4-228, which regulates the conduct of the Hearing Officer's Hearing, I am required, first, to identify any unresolved comments or issues as of the date of the hearing. As such, I inquired of Mr. Douglas, counsel for the Developer, as to any unresolved issues from the Developer's perspective. Mr. Douglas indicated that there were essentially three issues which needed to be addressed. First, there was a road widening issue. This issue is also related to the Special Hearing request. In short, the County's Bureau of

ORDER RECEIVED FOR FILING
Date 11-14-07
By PB

Development Plans Review has requested that, as a condition of plan approval, the Developer be required to widen Flintstone Road for public safety reasons as well as to satisfy the development regulations. In particular, Baltimore County Code Section 32-4-302(a) requires an applicant for a Development Plan to provide the public improvements or private improvements required by the County. On the other hand, the Developer has requested that road widening on Flintstone Road not be a condition of approval, or that the Developer be granted special hearing relief to waive the requirement that it widen portions of Flintstone Road.

The second issue Mr. Douglas identified was the County's requirement that streetlights in the new development be installed. There are obvious safety benefits to this requirement, however, the Developer is resistant to this requirement because of the amount of light that could be generated from these lights, and the fact that none of the other streets immediately adjacent to the proposed development have streetlights. The third issue identified by Mr. Douglas concerned the Forest Conservation Plan. The recently submitted revised plan has not yet been finally approved by DEPRM. In light of these issues, which the Developer was optimistic could be addressed and remedied to the satisfaction of the County agencies and the community, the Developer requested that the record of the hearing be kept open for a reasonable period of time following the hearing.

I then inquired of the particular County agency representatives and asked that they state whether there were any outstanding issues applicable to their particular agency. Their responses are summarized below:

Recreation and Parks: Bruce Gill appeared on behalf of the Department of Recreation and Parks and indicated that the required local open space for the development proposal is 12,000 square feet or 0.28 acres, more or less, of which 7,800 square feet is active and 4,200 square feet is passive open space. Mr. Gill also indicated that a proposed development involving 20 units or less should be considered for a fee in lieu of open space if requested. He confirmed that a waiver of local open space requirements, pursuant to B.C.C. Section 32-6-108(c)(3)(ii) and (d), was requested by the Developer to pay a fee in lieu of providing local open space. The Department granted that request as shown by the letter dated October 2, 2007, which was marked and accepted

RECEIVED FOR FILING
Date 11-14-07
By

into evidence as Baltimore County Exhibit 1, and indicated that a fee of $29,125.20 is to be paid prior to the recordation of the Record Plat. Therefore, the Department of Recreation and Parks recommended approval of the plan.

Planning Office: Lloyd Moxley appeared on behalf of the Office of Planning. Mr. Moxley indicated that a School Impact Analysis was prepared and submitted by the engineer and showed that the elementary school and middle school in the District possess adequate capacity for additional students, and that Hereford High School exceeds capacity. Mr. Moxley also pointed out that Dulaney High School and Franklin High School currently possess sufficient capacity to accommodate a potential overflow from Hereford, therefore, the adequate facilities requirements were fulfilled. Mr. Moxley submitted the School Impact Analysis prepared by the County which confirmed the aforementioned capacity. This was marked and accepted into evidence as Baltimore County Exhibit 2. Mr. Moxley also indicated that the redlined Development Plan met all other Planning Office requirements, including a finding that the plan meets all R.C. Performance Standards, and that the Landscape Plan addresses and meets the requirements for scenic routes. As such, the Office of Planning recommended approval of the redlined plan.

Development Plans Review (Public Works): Dennis Kennedy appeared on behalf of the Bureau of Development Plans Review. Mr. Kennedy indicated that the redlined Development Plan addressed his agency's comments. In addition, Mr. Kennedy discussed the requirement that the Developer provide road widening on Flintstone Road and the related Special Hearing for a waiver of that requirement. He indicated that the County required road widening on Flintstone Road from Cotter Road to the newly proposed Rauh Court in order to make the road 16 feet wide. Related to this issue, Mr. Kennedy pointed out that the road is approximately 15 feet wide plus a shoulder, and that there are some areas wider than 15 feet. In addition, the community is not in favor of road widening due to the character of Flintstone Road as a scenic route. Therefore, Mr. Kennedy indicated that the Director of Public Works recommended a waiver of the road widening requirement. However, as to the streetlights issue, Mr. Kennedy indicated the Department of Public Works did not recommend a waiver of that requirement. He indicated that streetlights are

ORDER RECEIVED FOR FILING
Date 11-14-07
By PB

necessary for intersections and cul-de-sacs and should be incorporated into the Development Plan. Otherwise, Mr. Kennedy indicated that his department recommends approval of the plan.

Department of Environmental Protection and Resource Management: Dave Lykens appeared on behalf of DEPRM. Mr. Lykens indicated that, as mentioned by the Developer's attorney, there still remained an outstanding issue with regard to the Forest Conservation Plan, and that other minor issues were being reviewed and addressed. Mr. Lykens also indicated that the revised Forest Conservation Plan had only recently been received by his office and was in the process of being reviewed, though it does appear to show sufficient area to meet the R.C. requirements. Mr. Lykens concurred with the Developer's request to keep the record open in order to resolve this issue. In light of the Developer's request and Mr. Lykens' concurrence to keep the record open, the request was granted pending further notification from DEPRM or the Developer concerning the Forest Conservation Plan.

Office of Zoning Review: Joe Merrey appeared in place of June Fernando on behalf of the Zoning Review Office. Mr. Merrey indicated that all comments had been addressed and that his department recommended approval of the redlined Development Plan.

Land Acquisition: Brad Knatz appeared on behalf of the Bureau of Land Acquisition. Mr. Knatz indicated that his agency did not have any outstanding issues and recommended approval of the redlined Development Plan.

As previously indicated, several interested persons residing near the location of the proposed Development Plan attended the hearing. In addition, several letters of concern from other interested citizens were received prior to the hearing and were accepted as exhibits. A letter from Susan and Larry Sauder of 2713 Flintstone Road was marked and accepted into evidence as Community Exhibit 1, and a letter from Andy Rathgeber on behalf of the Freeland Community Association was marked and accepted into evidence as Community Exhibit 2. Following input from the Developer and the County representatives as to any unresolved issues, I inquired of the community as to any unresolved issues. None of the members of the community in attendance at the hearing indicated specific opposition to the development, but did touch on issues of

RECEIVED FOR FILING
Date 11-14-07
By PB

importance to them individually.

Ms. Callahan expressed concern about safety on Flintstone Road. Though she was not in favor of widening the road, she did express concern that the drop-off from the shoulder results in a swale in some areas of the road. Ms. West indicated that her property is down a hill to the southwest of the proposed development and that she is concerned that three to four septic systems will drain in her direction. However, Mr. Warfield, the Developer's engineer, approached the redlined Development Plan that was displayed at the Hearing and pointed out that the location of the septic reserve areas and the topography of the property indicated that there would be no flow onto Ms. West's property. Ms. West also indicated that she has a carport and that according to the plans she has reviewed, it indicated that one corner of the carport encroached over the proposed line for the conservancy area, which needed to be followed up between Ms. West and the Developer and the County, and addressed in this Order. Mr. Douglas, the Developer's attorney, indicated he had made a note of this issue and would look into resolving this minor matter with Ms. West.

Moving next to the more formal portion of the hearing, the Developer presented its case in support of approval of the plan. It should be noted that during his opening remarks at the outset of the Hearing, the Developer's attorney, Mr. Douglas, offered some historical perspective on the property and what the Developer's intentions are with respect to this proposed development. Mr. Douglas indicated that the property was owned for a number of years by Gladys Rauh. Following her passing in January 2006, the property was inherited by members of Ms. Rauh's family. According to Mr. Douglas, Ms. Rauh long appreciated the rural character of the Freeland area and desired that this character be maintained. Prior to her death, Ms. Rauh expressed a willingness to having the property developed, but did not want the property exploited to such an extent that it would lose its rural character. In short, Ms. Rauh understood the benefits of developing the property, but wanted a proper balance between providing her family with financial security and keeping the rural quality of the land and the natural resources intact as much as possible. As such, in planning and preparing the Development Plan, Mr. Douglas indicated the Developer kept Ms.

Date 11-14-07
By PB

Rauh's wishes at the forefront and wanted to capture her desires for the property, while also presenting a plan that would hopefully be viewed favorably by neighbors.

Mr. Douglas then called on Steve Warfield to present the Development Plan. Mr. Warfield testified that he is a professional engineer and a principle with the firm of Matis Warfield, LLC. He submitted a copy of his resume which was marked and accepted into evidence as Developer's Exhibit 1. His firm specializes in storm water management design, utility design, sediment control and road design, and land development. Mr. Warfield, who has been a registered professional engineer since 1995, was offered and accepted as an expert in civil engineering, land development, and the necessary zoning and land use requirements in Baltimore County.

Mr. Warfield testified that he was directly involved in the development and preparation of the Development Plan and the revisions. He attended the CIM, the CPC, the DPC, and met with representatives of the County reviewing agencies. He also prepared and sealed the redlined Development Plan offered and accepted into evidence as Developer's Exhibit 2, and also prepared the Color Development Plan Sketch which was marked and accepted into evidence as Developer's Exhibit 3. Page one of Developer's Exhibit 2 contains the Cover Sheet, page two contains the Notes and Details, page three contains the Development Plan, and page four contains the Blowup of R.C.4 Cluster.

The subject property involves two adjacent lots which straddle Cotter Road. The northern parcel lies above Cotter Road and the southern parcel lies below Cotter Road as shown on the Development Plan. The Developer proposes to construct 12 single-family homes in various locations throughout the property. In laying out the proposed development, Mr. Warfield indicated that, in keeping with Ms. Rauh's wishes, the goal was not to maximize the number of homes on the property (in which the zoning would have allowed up to 30), but to fashion a layout that, while being economically viable, would also be consistent with the rural character of the property and would present the least impact aesthetically and environmentally. To illustrate this point, Mr. Warfield submitted an aerial photograph which was marked and accepted into evidence as Developer's Exhibit 4 (a smaller version of this exhibit was marked and accepted into evidence

ORDER RECEIVED FOR FILING
Date 11-14-07
By PM

as Developer's Exhibit 4A). The aerial photograph shows the view of the property currently, with an overlay of the proposed development. The overlay shows that the location and configuration of the lots will be in areas that are already cleared. In fact, Mr. Warfield opined that the amount of forested areas to be cleared will be approximately 1.4 acres, and possibly less.

Mr. Warfield then discussed the proposed layout which is planned as follows: Lot 1 will be located at the northeast corner of Cotter Road and Flintstone Road and will consist of approximately 7.86 acres. Access to the lot will be from Flintstone Road. Lot 2 will be located on the east and southeast side of the property and will be bisected by Cotter Road. Lot 2 will be by far the largest of the 12 lots, consisting of approximately 82.23 acres in the R.C.2, R.C.4, and R.C.8 zones. Access will be from Cotter Road. It will include large areas of wetlands, streams, forests, and other undisturbed environmentally sensitive areas.. Lot 3 will be located at the far northeast corner of the property and will consist of approximately 22.64 acres, also in the R.C.2, R.C.4, and R.C.8 zones. This lot will include an abundance of land that is already cleared, with some undisturbed forest area as well. Access will be from Flintstone Road, closer to Middletown Road. Lot 4 will be located at the northwest corner of the property, abutting Flintstone Road, and will consist of 39.56 acres. It will also include land that will be part of the conservancy area. Access to the lot will be from the proposed Rauh Court to be connected to Flintstone Road, and over half of this lot will consist of undisturbed forest area. Lots 5 through 12 will be located near the northwest corner of Cotter Road and Flintstone Road. These lots will range in size from 1.53 acres to 2.11 acres and all except Lot 11 will be accessed from Rauh Court. Lot 11 will be accessed from Flintstone Road. This proposed cluster of lots will create the least environmental impact -- and the most preservation of existing conditions. In addition, Mr. Warfield indicated that this area is the only area on the property where there are non-prime and productive soils.

Mr. Warfield also indicated that a large area -- known as Tract A -- located at the southwest corner of the property consisting of approximately 29.53 acres will be placed in a preservation easement, part of which will also be included in the conservancy area. The lots will utilize well and septic. The storm water management area for Lots 5 through 12 will be located at

OPEN RECEIVED FOR FILING
Date 11-14-07
By PM

the northwest corner of Flintstone Road and Rauh Court and will flow through an underground pipe below Flintstone Road to the other side, then along the rear, forested area of Lot 1 to the adjacent stream. Landscaping will be provided according to the Schematic Landscape Plan prepared by Ms. Malena with Human & Rohde, Inc., which was marked and accepted into evidence as Developer's Exhibit 5. This exhibit shows an abundance of trees and shrubs throughout the main areas of the development consisting of Lots 5 through 12, as well as landscaping around Lots 1 and 2 in the areas which front Cotter Road, in order to preserve the character of Cotter Road as a scenic road.

In support of the Petition for Special Hearing requesting a waiver pursuant to Baltimore County Code (B.C.C.) Section 32-4-107 of the requirement for providing public or private improvements pursuant to B.C.C. Section 32-4-302(a) -- specifically, widening Flintstone Road to 16 feet, Mr. Warfield submitted a site plan of the area of Flintstone Road and Cotter Road, which was marked and accepted into evidence as Developer's Exhibit 7. Mr. Warfield then testified he believed a waiver was warranted in this case. He indicated that as it is now configured, Flintstone Road is approximately 15.5 feet wide in a number of areas, and just under 16 feet in other areas. In order to properly widen the road, it would actually need to be widened to greater than 16 feet. This result would not be beneficial aesthetically and would have only a marginal, if any, impact on safety. It would also interfere with the road's rural and rustic character.

In concluding his testimony, Mr. Warfield indicated that the redlined Development Plan had been presented to County agency representatives and had addressed all of those agencies' comments. Finally, he offered his opinion that, but for the revised Forest Conservation Plan being considered by DEPRM, and based on his professional knowledge and experience, the redlined Development Plan marked and accepted into evidence as Developer's Exhibit 2 fully complies with the development regulations, rules and policies contained in the Baltimore County Zoning Regulations (B.C.Z.R.) and the Baltimore County Code (B.C.C.). Mr. Warfield also opined that a waiver of the requirements of B.C.C. Section 32-4-302(a) was appropriate and that the Developer's Petition for Special Hearing should be granted.

ORDER RECEIVED FOR FILING
Date 11-14-07
By PB

The final witness to testify was Carl Wilson of The Traffic Group. The Traffic Group specializes in transportation engineering and transportation planning. Mr. Wilson is a civil engineer with a master's degree in engineering from the University of Maryland and has been qualified and testified in Baltimore County as an expert in traffic engineering. Marked and accepted into evidence as Developer's Exhibit 8 was Mr. Wilson's resume. He was offered and accepted as an expert in this case. Mr. Wilson indicated that his firm was retained to perform and prepare a traffic impact analysis of the subject property. This included intersection movement counts in mornings and afternoons at Middletown Road and Flintstone Road and Flintstone Road and Cotter Road, calculating average daily traffic at these locations, as well as observing site distances. Mr. Wilson's report, which was marked and accepted into evidence as Developer's Exhibit 9, revealed that the existing intersections are currently operating at a Level of Service "A" during peak hours, and that the intersections will continue a Level of Service "A" with the proposed development. The existing peak hour traffic volumes were marked and accepted into evidence as Developer's Exhibit 10. He also indicated that site distances at the intersections were satisfactory.

On November 8, 2007, the undersigned received an Inter-Office Correspondence of the same date from David Lykens, Development Coordinator with DEPRM, concerning the instant matter and the issues regarding the proposed development's environmental considerations -- in particular, the Forest Conservation Plan. Mr. Lykens' correspondence and the redlined Development Plan attached to it (identical to the redlined plan accepted as Developer's Exhibit 2) shall be marked and accepted into evidence as Baltimore County Exhibit 3. It indicates that his department completed its review of the environmental information associated with the subject property and the proposed development, and that based on that review, DEPRM now recommends approval of the redlined Development Plan.

The Baltimore County Code clearly provides that the "Hearing Officer shall grant approval of a development plan that complies with these development regulations and applicable policies, rules and regulations." B.C.C. Section 32-4-229.

ORDER RECEIVED FOR FILING
Date 11-14-07
By BM

After due consideration of the testimony presented by Mr. Warfield concerning the Development Plan proposal, the traffic analysis prepared by Mr. Wilson, the related exhibits, as well as the concurrence of the various County agencies, I find that the redlined Development Plan accepted into evidence as Developer's Exhibit 2 is in compliance with all applicable policies, rules, and regulations. I am also persuaded by the testimony of Mr. Warfield and his presentation of the redlined Development Plan and the Forest Conservation Plan, the Landscape Plan prepared by Ms. Malena, and the input from the relevant County agencies that this Development Plan is in keeping with the spirit and intent of the development regulations and will not have a detrimental effect on the health, safety, and welfare of the public, or the surrounding locale. Therefore, having identified no remaining unresolved or outstanding issues that would prevent plan approval, the Developer has satisfied its burden of proof and, therefore, is entitled to approval of the redlined Development Plan. The only condition to be attached to this approval shall be in connection with the comment from Mr. Kennedy of the County's Bureau of Development Plans Review concerning the requirement of streetlights. Having heard no persuasive evidence or testimony to refute this requirement, the Developer shall provide streetlights as required by Baltimore County.

As to the Petition for Special Hearing requesting a waiver pursuant to B.C.C. Section 32-4-107 of the requirement for widening Flintstone Road to 16 feet pursuant to B.C.C. Section 32-4-302(a), I am persuaded to grant this relief. Based on the testimony from Mr. Warfield as well as the testimony of Mr. Kennedy indicating that the Director of Public Works recommended a waiver of the road widening requirement, I believe a waiver is warranted. The allocation of resources to widen the road very slightly, taken with the potential negative aesthetic impacts on the rural and rustic character of Flintstone Road leads me to determine that a waiver is in the best interests of the community and the Developer. While I am mindful of the rationale of a road widening requirement -- to increase safety on the road, this rationale has not been supported by any specific evidence on this issue applicable to this particular case. Hence, I shall grant the special hearing request and approve a waiver as it pertains to the road widening requirement.

ORDER RECEIVED FOR FILING
Date 11-14-07
By BZ

Pursuant to the advertisement, posting of the property, and public hearing held thereon, the requirements of which are contained in Article 32, Title 4, of the Baltimore County Code, the redlined "Rauh Property" Development Plan, introduced as Developer's Exhibit 2, shall be approved consistent with the directions and conditions contained herein.

THEREFORE, IT IS ORDERED by this Hearing Officer/Deputy Zoning Commissioner for Baltimore County, this 14th of November, 2007, that the redlined "RAUH PROPERTY" Development Plan, entered into evidence as "Developer's Exhibit 2," be and is hereby APPROVED.

IT IS FURTHER ORDERED, that Petitioner's request for Special Hearing relief pursuant to Section 500.7 of the Baltimore County Zoning Regulations (B.C.Z.R.), to approve a waiver pursuant to Baltimore County Code Section 32-4-107 of the requirement that the Developer widen portions of Flintstone Road pursuant to B.C.C. Section 32-4-302(a) be and is hereby GRANTED.

Any appeal of this decision must be taken in accordance with Section 32-4-281 of the Baltimore County Code.

THOMAS H. BOSTWICK
Deputy Zoning Commissioner
for Baltimore County

THB:pz

11-14-07

BALTIMORE COUNTY
MARYLAND

JAMES T. SMITH, JR.
County Executive

THOMAS H. BOSTWICK
Deputy Zoning Commissioner

November 14, 2007

JOHN CANOLES
1527 YORK ROAD
LUTHERVILLE MD 21093

Re: Development Plan Order
Case No. VI-303
Project: Rauh Property

Dear Mr. Canoles:

Enclosed please find the decision rendered in the above-captioned case.

In the event the decision rendered is unfavorable to any party, please be advised that any party may file an appeal within thirty (30) days from the date of the Order to the Department of Permits and Development Management. If you require additional information concerning filing an appeal, please feel free to contact our appeals clerk at 410-887-3391.

Very truly yours,

THOMAS H. BOSTWICK
Deputy Zoning Commissioner
for Baltimore County

THB:pz

Enclosure

c: Robert Douglas, Esquire, DLA Piper USA LLC, 6225 Smith Avenue, Baltimore MD 21209
Carl Wison, The Traffic Group, 9900 Franklin Square Drive #H, Baltimore MD 21236
Sally Malena, 512 Virginia Avenue, Towson MD 21286
Steve Warfield, Matis Warfield, Inc., 10540 York Road #M, Hunt Valley MD 21030
Richard and Carol West, 2927 Cotter Road, Manchester MD 21102
Colleen Callahan, 2720 Flintstone Road, Freeland MD 21053
Reb and Beverly Scavone, 20220 Middletown Road, Freeland MD 21053

Petition for Special Hearing

to the Zoning Commissioner of Baltimore County

for the property located at Intersection of Flintstone and Cotter Roads

which is presently zoned RC-2, RC-4 and RC-8

*(This petition **must** be filed in person, in the zoning office, in triplicate, with original signatures.)*

This Petition shall be filed with the Department of Permits and Development Management. The undersigned, legal owner(s) of the property situate in Baltimore County and which is described in the description and plat attached hereto and made a part hereof, hereby petition for a Special Hearing under Section 500.7 of the Zoning Regulations of Baltimore County, to determine whether or not the Zoning Commissioner should approve

(This box to be completed by planner)

See Attached

Property is to be posted and advertised as prescribed by the zoning regulations.
I, or we, agree to pay expenses of above Special Hearing, advertising, posting, etc. and further agree to and are to be bounded by the zoning regulations and restrictions of Baltimore County adopted pursuant to the zoning law for Baltimore County.

I/We do solemnly declare and affirm, under the penalties of perjury, that I/we are the legal owner(s) of the property which is the subject of this Petition.

Contract Purchaser/Lessee:

Not Applicable
Name - Type or Print

Signature

Address Telephone No.

City State Zip Code

Legal Owner(s):

Freefollie Farms LLC
Name - Type or Print

Signature

David Rauh, Manager
Name - Type or Print

Signature

308 Lincoln St. 847-729-4188
Address Telephone No.

Glenview IL 60025
City State Zip Code

Attorney For Petitioner:

Robert C. Douglas
Name - Type or Print

Signature

DLA Piper USA LLC
Company

6225 Smith Avenue 410-580-4141
Address Telephone No.

Baltimore MD 21122
City State Zip Code

Representative to be Contacted:

Robert C. Douglas
Name

6225 Smith Avenue 410-580-4141
Address Telephone No.

Baltimore MD 21209
City State Zip Code

OFFICE USE ONLY

ESTIMATED LENGTH OF HEARING _____

UNAVAILABLE FOR HEARING _____

Reviewed By _____ Date 7-25-07

Case No. 08-045 SPH

REV 9/15/98

Petition for Special Hearing – Attachment
Freefollie Farms LLC
Owner of property located at intersection of Flintstone and Cotter Roads

The owner requests a hearing to determine whether the Zoning Commissioner should approve a waiver pursuant to Baltimore County Code Section 32-4-107. Baltimore County Code Section 32-4-302(a) requires an applicant to provide the public improvements or private improvements required by the County. In this case, we seek a waiver of the requirement to widen portions of Flintstone Road.

Matis Warfield

consulting engineers

ZONING DESCRIPTION to Accompany Petition For Variance Request

Beginning at a point on the north side of Cotter Road which is 15 feet wide and 620 feet+/- west from where Flintstone Road and Cotter Road intersect. Thence the following courses and distances:

N 52° 18' 27" W 415.651'
N 29° 10' 18" E 1171.245'
N 29° 27' 32" E 1032.550'
S 31° 25' 25" E 702.756'
S 45° 50' 10" E 828.874'
N 32° 06' 00" E 171.415'
S 44° 26' 43" E 152.998'
N 58° 45' 00" E 115.910'
N 44° 34' 00" E 116.590'
N 77° 22' 00" E 118.790'
N 86° 26' 00" W 161.930'
N 71° 36' 00" E 57.317'
S 54° 55' 04" E 59.954'
S 48° 49' 24" E 351.462'
S 11° 51' 13" W 359.979'
S 88° 53' 22" E 135.946'
S 25° 28' 46" E 613.737'
S 41° 46' 14" W 466.126'
S 17° 54' 16" E 1055.172'
S 24° 36' 36" E 252.000'
N 85° 08' 22" W 456.000'
S 18° 59' 41" W 150.149'
S 08° 12' 53" E 144.846'
S 18° 47' 07" W 141.000'
N 73° 42' 05" W 195.000'
N 60° 02' 21" W 592.589'
S 21° 27' 45" W 707.395
N 58° 42' 32" W 405.599'
N 47° 44' 01" W 900.918'
N 78° 19' 44" W 49.280'
N 72° 26' 06" W 25.372'

Matis Warfield, Inc.
10540 york road • suite m • hunt valley, maryland 21030
phone 410-683-7004 • facsimile 410-683-1798
www.matiswarfield.com

S 33° 38' 56" W 1023.000'
N 05° 10' 09" W 95.367'
N 35° 38' 56" E 990.000'
N 39° 41' 04" W 591.117'
S 46° 19' 47" W 575.526'
N 76° 40' 18" W 1027.929'
N 18° 29' 42" E 913.637'
S 73° 59' 31" E 674.021'
N 33° 27' 59" E 448.937'

To the place of beginning,
Containing 205.80-acres±, and being Parcels 31 and 57 as shown on Baltimore County Tax Map 5, 6, 10 and 11. All parcels are located in the 6th Election District.

THIS DESCRIPTION COMPILED FOR ZONING PURPOSES ONLY AND IS NOT INTENDED TO BE USED FOR CONVEYANCES OR AGREEMENTS

NOTICE OF ZONING HEARING

The Zoning Commissioner of Baltimore County, by authority of the Zoning Act and Regulations of Baltimore County will hold a public hearing in Towson, Maryland on the property identified herein as follows:

Case: # 08-045-SPH
Intersection of Flintstone and Cotter Roads
N/side of Cotter Road, 620 ft. +/- west of Flintstone Road
6th Election District - 3rd Councilmanic District
Legal Owner(s): Freefollie Farms, LLC

Special Hearing: to determine whether the Zoning Commissioner should approve a waiver pursuant to Baltimore County Code Section 32-4-107. Baltimore County Code Section 32-4-302(a) requires an applicant to provide the public improvements or private improvements required by the County. In this case, we seek a waiver of the requirement to widen portions of Flintstone Road.

Hearing: Thursday, October 4, 2007 at 9:00 a.m. in Room 106, County Office Building, 111 West Chesapeake Avenue, Towson 21204

WILLIAM J. WISEMAN, III
Zoning Commissioner for Baltimore County

NOTES: (1) Hearings are Handicapped Accessible; for special accommodations Please Contact the Zoning Commissioner's Office at (410) 887-4386.
(2) For information concerning the File and/or Hearing, Contact the Zoning Review Office at (410) 887-3391.

JT 9/710 Sept. 18 149164

CERTIFICATE OF PUBLICATION

9/20, 2007

THIS IS TO CERTIFY, that the annexed advertisement was published in the following weekly newspaper published in Baltimore County, Md., once in each of 1 ~~successive~~ weeks, the first publication appearing on 9/18, 2007.

- ☑ The Jeffersonian
- ☐ Arbutus Times
- ☐ Catonsville Times
- ☐ Towson Times
- ☐ Owings Mills Times
- ☐ NE Booster/Reporter
- ☐ North County News

S. Wilkinson

LEGAL ADVERTISING

BALTIMORE COUNTY, MARYLAND
OFFICE OF BUDGET AND FINANCE
MISCELLANEOUS RECEIPT

No. 03897

Date: 7-25-07

Fund	Agcy	Orgn	Sub Orgn	Rev Source	Sub Rev	Rept Catg	BS Acct	Amount
001	006			6150				325.—
							Total:	325.—

Rec From: FRED DOUGLAS

For: 045 SD HRG.

DISTRIBUTION
WHITE - CASHIER PINK - AGENCY YELLOW - CUSTOMER

PAID RECEIPT

CASHIER'S VALIDATION

CERTIFICATE OF POSTING

RE: Case No.: 08-045-SPH

Petitioner/Developer: FREEFOLLIE FARMS

Date of Hearing/Closing: OCT 4, 2007

Baltimore County Department of
Permits and Development Management
County Office Building, Room 111
111 West Chesapeake Avenue
Towson, Maryland 21204

ATTN: Kristen Matthews {(410) 887-3394}

Ladies and Gentlemen:

This letter is to certify under the penalties of perjury that the necessary sign(s) required by law were posted conspicuously on the property located at: 3 SIGNS POSTED, FLINTSTONE + BOLLINGER, FLINTSTONE + COTTER, AND FLINTSTONE RD

The sign(s) were posted on 9-3-07
(Month, Day, Year)

Sincerely,

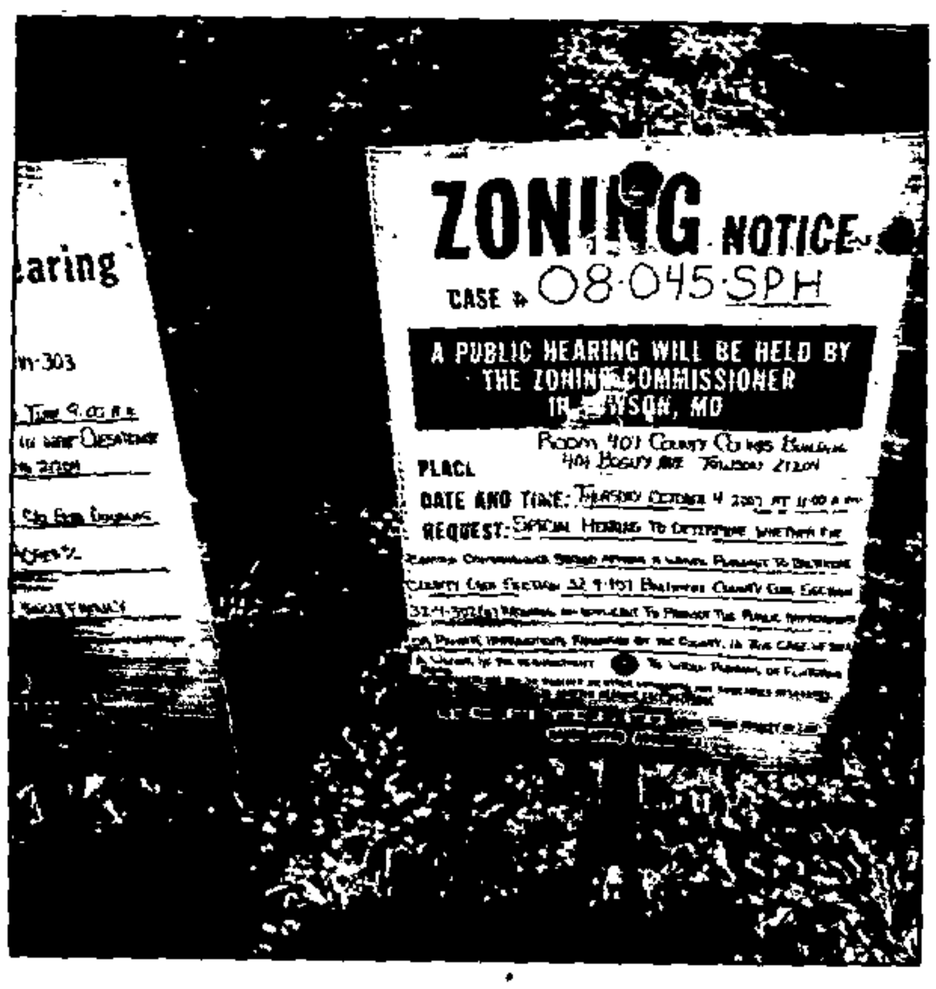

FLINTSTONE

Robert Black 9-6-07
(Signature of Sign Poster) (Date)

SSG Robert Black
(Print Name)

1508 Leslie Road
(Address)

Dundalk, Maryland 21222
(City, State, Zip Code)

(410) 282-7940
(Telephone Number)

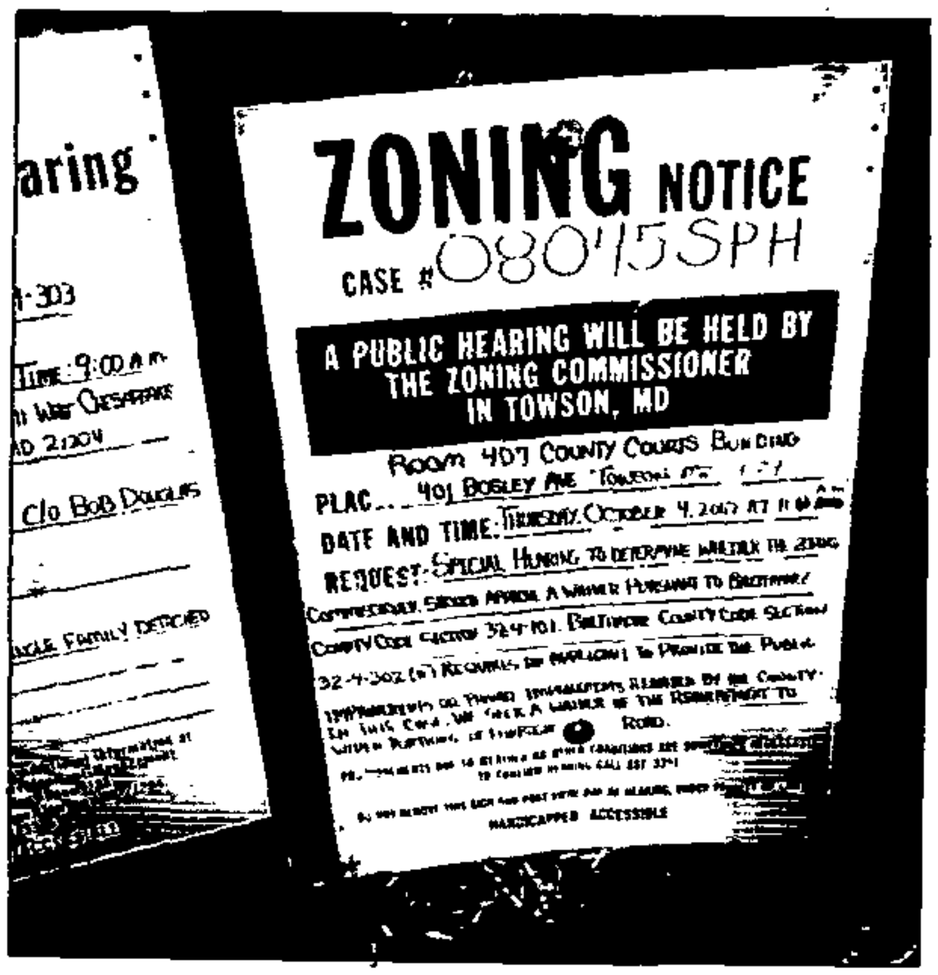

FLINTSTONE & COTTER

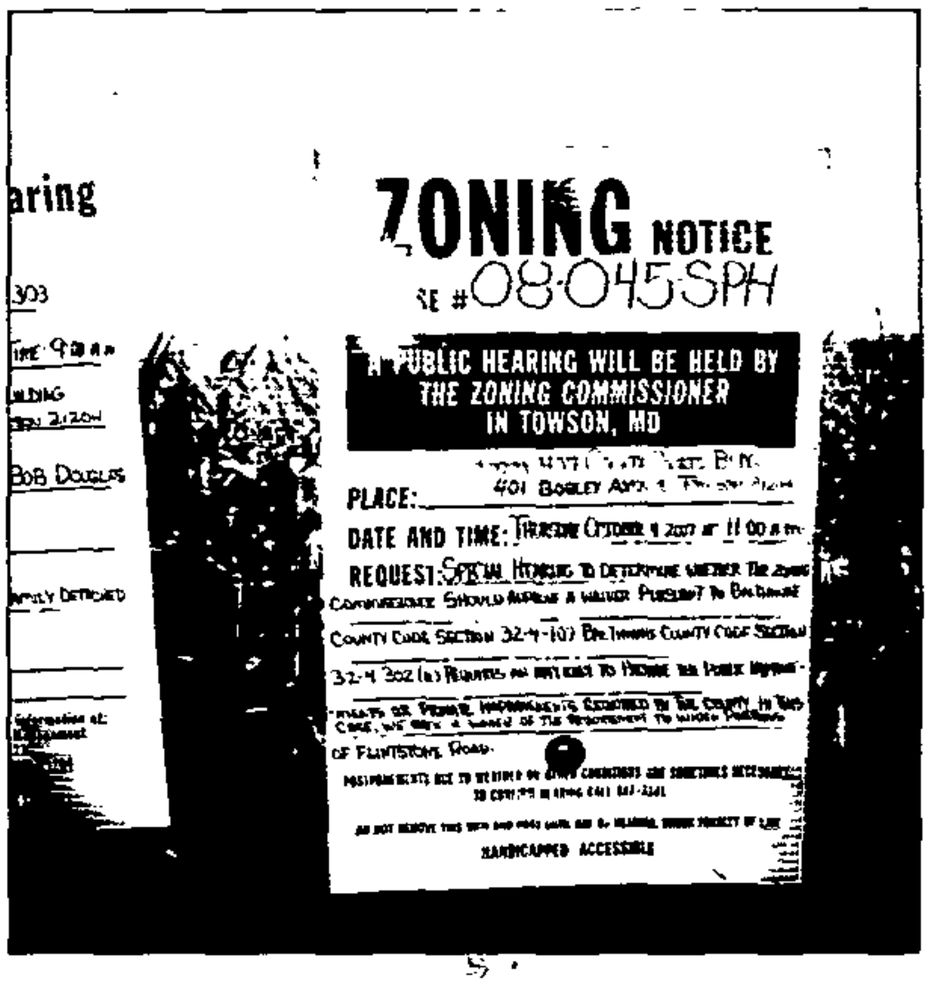

FLINTSTONE & BOLLINGER

TO: PATUXENT PUBLISHING COMPANY
Tuesday, September 18, 2007 Issue - Jeffersonian

Please forward billing to:
Robert Douglas
DLA Piper USA
6225 Smith Avenue
Baltimore, MD 21122

410-580-4141

CORRECTED NOTICE OF ZONING HEARING

The Zoning Commissioner of Baltimore County, by authority of the Zoning Act and Regulations of Baltimore County, will hold a public hearing in Towson, Maryland on the property identified herein as follows:

CASE NUMBER: 08-045-SPH
Intersection of Flintstone and Cotter Roads
N/side of Cotter Road, 620 ft. +/- west of Flintstone Road
6th Election District – 3rd Councilmanic District
Legal Owners: Freefollie Farms, LLC

Special Hearing to determine whether the Zoning Commissioner should approve a waiver pursuant to Baltimore County Code Section 32-4-107. Baltimore County Code Section 32-4-302(a) requires an applicant to provide the public improvements or private improvements required by the County. In this case, we seek a waiver of the requirement to widen portions of Flintstone Road.

Hearing: Thursday, October 4, 2007 at 9:00 a.m. in Room 106, County Office Building, 111 West Chesapeake Avenue, Towson 21204

WILLIAM J. WISEMAN III
ZONING COMMISSIONER FOR BALTIMORE COUNTY

NOTES: (1) HEARINGS ARE HANDICAPPED ACCESSIBLE; FOR SPECIAL ACCOMODATIONS, PLEASE CONTACT THE ZONING COMMISSIONER'S OFFICE AT 410-887-4386.
(2) FOR INFORMATION CONCERNING THE FILE AND/OR HEARING, CONTACT THE ZONING REVIEW OFFICE AT 410-887-3391.

BALTIMORE COUNTY

MARYLAND

JAMES T. SMITH, JR.
County Executive

TIMOTHY M. KOTROCO, *Director*
Department of Permits and Development Management

August 30, 2007

CORRECTED NOTICE OF ZONING HEARING

The Zoning Commissioner of Baltimore County, by authority of the Zoning Act and Regulations of Baltimore County, will hold a public hearing in Towson, Maryland on the property identified herein as follows:

CASE NUMBER: 08-045-SPH
Intersection of Flintstone and Cotter Roads
N/side of Cotter Road, 620 ft. +/- west of Flintstone Road
6th Election District – 3rd Councilmanic District
Legal Owners: Freefollie Farms, LLC

Special Hearing to determine whether the Zoning Commissioner should approve a waiver pursuant to Baltimore County Code Section 32-4-107. Baltimore County Code Section 32-4-302(a) requires an applicant to provide the public improvements or private improvements required by the County. In this case, we seek a waiver of the requirement to widen portions of Flintstone Road.

Hearing: Thursday, October 4, 2007 at 9:00 a.m. in Room 106, County Office Building, 111 West Chesapeake Avenue, Towson 21204

Timothy Kotroco

Timothy Kotroco
Director

TK:klm

C: Robert Douglas, DLA Piper USA, LLC, 6225 Smith Avenue, Baltimore 21122
David Rauh, Freefollie Farms, LLC, 308 Lincoln Street, Glenview Illinois 60025

NOTES: (1) **THE PETITIONER MUST HAVE THE ZONING NOTICE SIGN POSTED BY AN APPROVED POSTER ON THE PROPERTY BY WEDNESDAY, SEPT. 19, 2007.**
(2) HEARINGS ARE HANDICAPPED ACCESSIBLE; FOR SPECIAL ACCOMMODATIONS PLEASE CALL THE ZONING COMMISSIONER'S OFFICE AT 410-887-4386.
(3) FOR INFORMATION CONCERNING THE FILE AND/OR HEARING, CONTACT THE ZONING REVIEW OFFICE AT 410-887-3391.

DEPARTMENT OF PERMITS AND DEVELOPMENT MANAGEMENT

ZONING REVIEW

ADVERTISING REQUIREMENTS AND PROCEDURES FOR ZONING HEARINGS

The Baltimore County Zoning Regulations (BCZR) require that notice be given to the general public/neighboring property owners relative to property which is the subject of an upcoming zoning hearing. For those petitions which require a public hearing, this notice is accomplished by posting a sign on the property (responsibility of the petitioner) and placement of a notice in a newspaper of general circulation in the County, both at least fifteen (15) days before the hearing.

Zoning Review will ensure that the legal requirements for advertising are satisfied. However, the petitioner is responsible for the costs associated with these requirements. The newspaper will bill the person listed below for the advertising. This advertising is due upon receipt and should be remitted directly to the newspaper.

OPINIONS MAY NOT BE ISSUED UNTIL ALL ADVERTISING COSTS ARE PAID.

For Newspaper Advertising:

Item Number or Case Number: 045

Petitioner: Free Follie Farms, LLC; DAVID RAUH, Manager

Address or Location: 308 Lincoln St. Glenview IL. 60025

PLEASE FORWARD ADVERTISING BILL TO:

Name: Bob Douglas Company: DLA Piper Rudnick Gary Cary US LLP

Address: 6225 Smith Ave

Baltimore, MD 21209

Telephone Number: 410-580-4141

BALTIMORE COUNTY
MARYLAND

JAMES T. SMITH, JR.
County Executive

TIMOTHY M. KOTROCO, *Director*
Department of Permits and Development Management

September 26, 2007

Robert C. Douglas
DLA Piper USA LLC
6225 Smith Avenue
Baltimore, MD 21122

Dear Mr. Douglas:

RE: Case Number: 08-045-SPH, Intersection of Flintstone and Cotter Roads

The above referenced petition was accepted for processing **ONLY** by the Bureau of Zoning Review, Department of Permits and Development Management (PDM) on July 25, 2007. This letter is not an approval, but only a **NOTIFICATION.**

The Zoning Advisory Committee (ZAC), which consists of representatives from several approval agencies, has reviewed the plans that were submitted with your petition. All comments submitted thus far from the members of the ZAC are attached. These comments are not intended to indicate the appropriateness of the zoning action requested, but to ensure that all parties (zoning commissioner, attorney, petitioner, etc.) are made aware of plans or problems with regard to the proposed improvements that may have a bearing on this case. All comments will be placed in the permanent case file.

If you need further information or have any questions, please do not hesitate to contact the commenting agency.

Very truly yours,

W. Carl Richards, Jr.
Supervisor, Zoning Review

WCR:amf

Enclosures

c: People's Counsel
Freefollie Farms LLC David Rauh, Manager 308 Lincoln Street Glenview, IL 60025

BALTIMORE COUNTY
MARYLAND

JAMES T. SMITH, JR.
County Executive

JOHN J. HOHMAN, *Chief*
Fire Department

County Office Building, Room 111
Mail Stop #1105
111 West Chesapeake Avenue
Towson, Maryland 21204

August 2, 2007

ATTENTION: Zoning Review Planners

Distribution Meeting Of: July 30, 2007

Item Number: 045

Pursuant to your request, the referenced plan(s) have been reviewed by this Bureau and the comments below are applicable and required to be corrected or incorporated into the final plans for the property.

3. The site shall be made to comply with all applicable parts of the Baltimore County Fire Prevention Code prior to occupancy or beginning of operation.

Lieutenant Roland P Bosley Jr.
Fire Marshal's Office
410-887-4881 (C)443-829-2946
MS-1102F

cc: File

Martin O'Malley, *Governor*
Anthony G. Brown, *Lt. Governor*

SHA
State Highway Administration
Maryland Department of Transportation

John D. Porcari, *Secretary*
Neil J. Pedersen, *Administrator*

Date: JULY 31, 2007

Ms. Kristen Matthews
Baltimore County Office Of
Permits and Development Management
County Office Building, Room 109
Towson, Maryland 21204

RE: Baltimore County
Item No. 8-45-SPH
FLINSTONE & COTTER ROADS
FREEFOLIE FARMS LLC
SPECIAL HEARING

Dear Ms. Matthews:

Thank you for the opportunity to review your referral request on the subject of the above captioned. We have determined that the subject property does not access a State roadway and is not affected by any State Highway Administration projects. Therefore, based upon available information this office has no objection to Baltimore County Zoning Advisory Committee approval of Item No. 8-45-SPH.

Should you have any questions regarding this matter, please contact Michael Bailey at 410-545-2803 or 1-800-876-4742 extension 5593. Also, you may E-mail him at (mbailey@sha.state.md.us).

Very truly yours,

Michael P. Bailey

For Steven D. Foster, Chief
Engineering Access Permits
Division

SDF/MB

BALTIMORE COUNTY, MARYLAND

INTEROFFICE CORRESPONDENCE

TO: Timothy Kotroco, Director
Department of Permits &
Development Management

DATE: July 31, 2007

FROM: Dennis A. Kennedy
Bureau of Development Plans Review

SUBJECT: Zoning Advisory Committee
Item No. 08-045-SPH

County Code Section 32-4-107, concerning waivers, begins with the phrase, "At the request of a department director, the Hearing Officer may grant a waiver of…." Neither the Director of Public Works nor the Director of Permits and Development Management has requested that this waiver be granted. As far as we know, no director of any department has made the request. We therefore do not believe that the petitioner's request should be entertained.

Should the hearing proceed, our reasoning and bases for making the requirement to widen Flintstone Road are as follows:

From the *Bureau of Development Plans Review Policy Manual, February, 2002, page 9, number 7-Road Improvements - With rural developments, the developer shall be fully responsible for the cost of road improvements related to the applicable open-section or concrete mountable curb and gutter section as established by the Bureau of Development Plans Review.* This manual was adopted by the County Council. The long-standing policy is that if the frontage road is not at least 16-feet wide, it should be widened to 18 feet so that it matches the minimum road width shown on the Department of Public Works Standard Detail R-I-1. Sixteen feet is considered the minimum width required for two cars to pass without slowing appreciably.

Also from the *Bureau of Development Plans Review Policy Manual, page 9, number 3-Improvements required for Access - The developer is responsible for the cost of offsite improvements required to provide his development with a suitable access.* The table below this indicates a width of 16-feet. From the configuration of the proposed site, we cannot tell which way the new residents will travel. They may take Flintstone Road south, go to Cotter Road and proceed to Beckleysville Road or they may take Flintstone Road north directly to Middletown Road. It was therefore difficult to determine which direction on Flintstone Road constituted the primary means of access. We decided that Flintstone Road south to Cotter Road would be considered the primary access. In accordance with numbers 3 and 7 from the *Policy*

Manual, we required widening along Flintstone Road south of the intersection.

Because of number 7 **and** because we are not sure which way the future owners will travel, we required widening along Flintstone Road north of the proposed intersection. This resulted in the requirement to widen Flintstone Road along the frontage. Please note that if we considered Flintstone Road north to be the primary access, the required widening would extend from the proposed intersection all the way to Middletown Road.

In light of the foregoing, we feel that the required widening is fair and is the minimum necessary for public safety and to satisfy the development regulations.

* * * * *

DAK
attachments
cc:file

3. Improvements Required for Access – The developer is responsible for the cost of offsite improvements required to provide his development with a suitable access. Minimum roadway width exclusive of any shoulder shall be as set forth in the following table. Average Daily Traffic (ADT) shall include traffic anticipated to be generated by the development.

ROADWAY WIDTH (Feet)	ADT Not to Exceed
16	500
18	2000
20	5000
22	9000
24	All roads exceeding 9000 ADT

4. Additional Means of Access – Where additional means of access for circulation within or between developments is deemed necessary, the developer shall provide such access and bear the cost of improvements.

5. Roads Terminating at Boundary Line – Where roads temporarily terminate at a property boundary line, a temporary "T" turnaround shall be required. The developer shall provide engineering drawings for an extended road grade for sufficient distance beyond the property line to establish a suitable grade.

6. Road Reconstruction – Where reconstruction of an existing road is required, the County may defer the improvements until proper methods of sequence of construction and/or detour of traffic can be resolved. The developer must provide engineering drawings for the reconstruction and maybe required to post approved security for the improvements.

7. Road Improvements – With rural developments, the developer shall be fully responsible for the cost of road improvements related to the applicable open-section or concrete mountable curb and gutter section as established by the Bureau of Development Plans Review.

DETAIL "A"

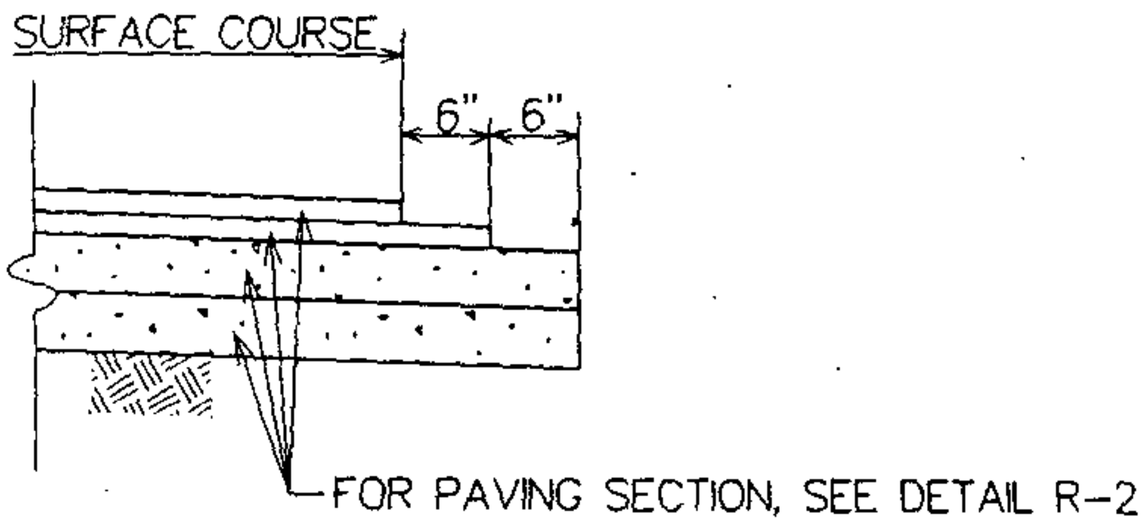

NOTES

THIS DETAIL SHALL BE USED ONLY IN RC ZONES.

STABILIZATION OF SLOPES & GRADES SHALL BE IN ACCORDANCE WITH THE PLANS OR AS DIRECTED BY THE ENGINEER.

* CUT & FILL SLOPE GRADES SHALL BE IN ACCORDANCE WITH RECOMMENDATIONS OF A REGISTERED GEOTECHNICAL ENGINEER.

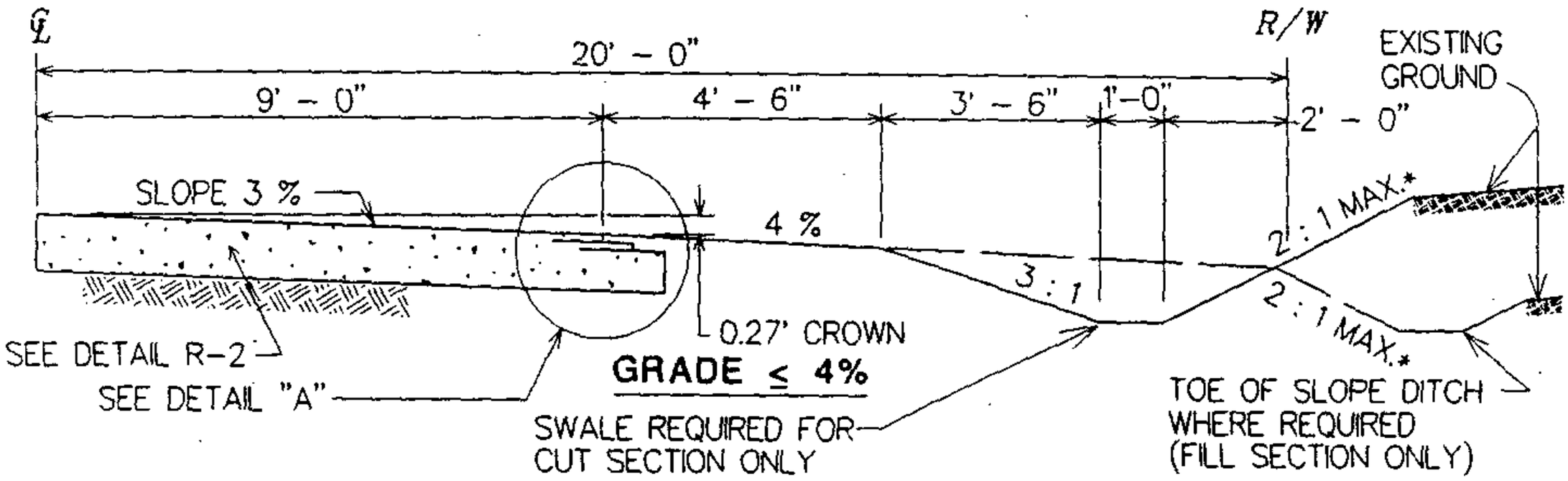

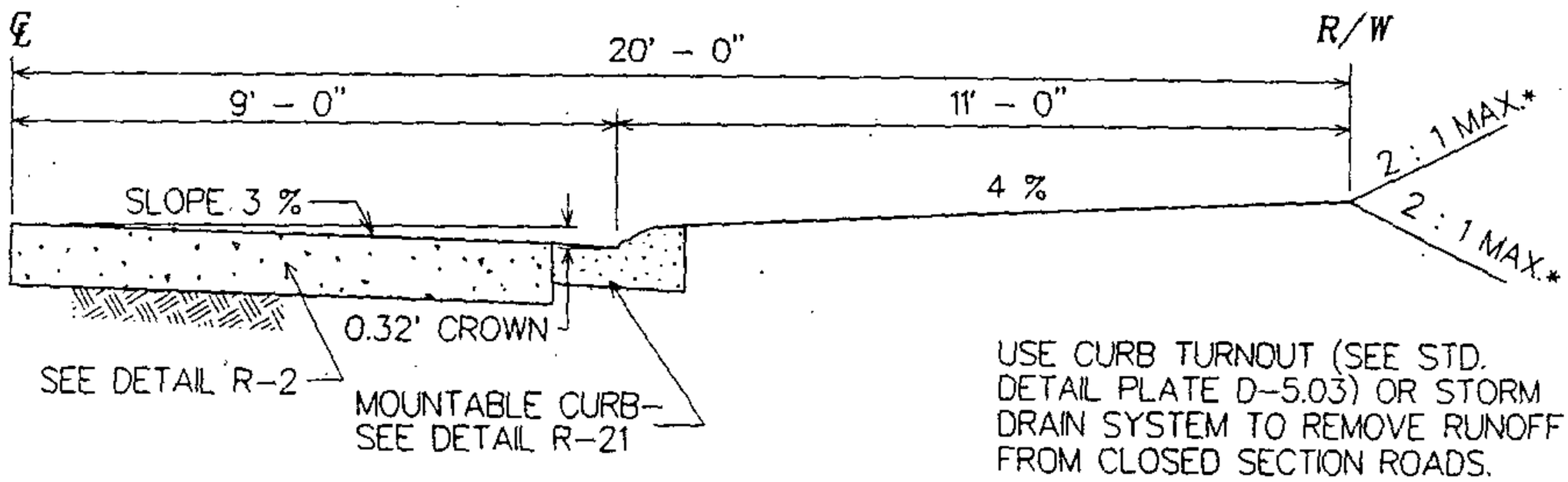

USE CURB TURNOUT (SEE STD. DETAIL PLATE D–5.03) OR STORM DRAIN SYSTEM TO REMOVE RUNOFF FROM CLOSED SECTION ROADS.

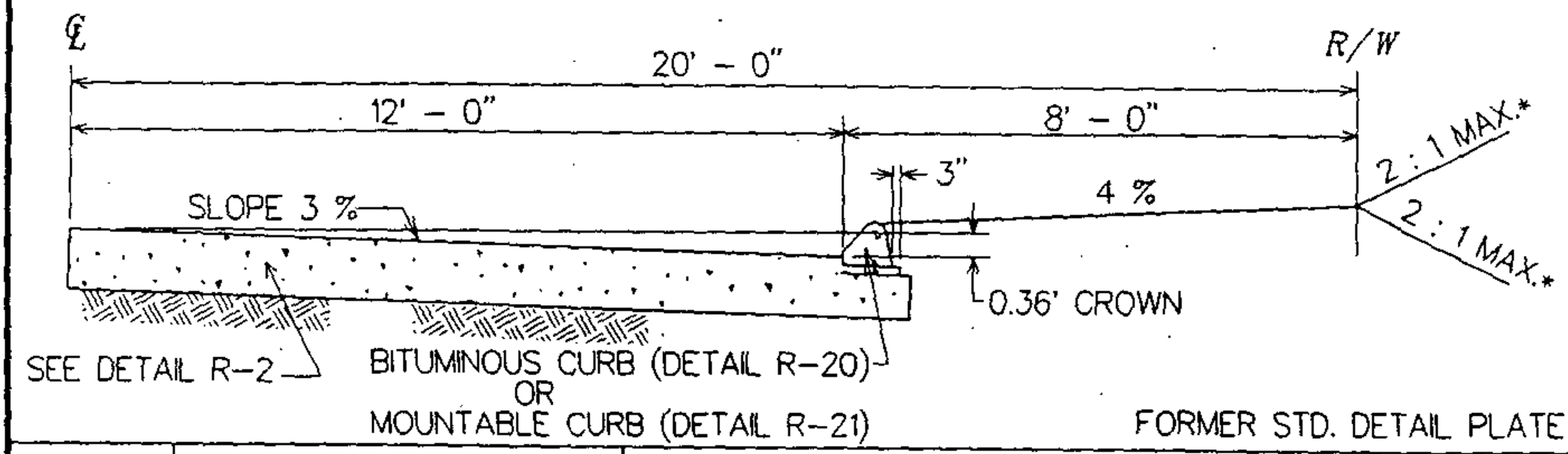

FORMER STD. DETAIL PLATE R–3

BALTIMORE COUNTY MARYLAND	APPROVAL DIRECTOR William Hoffman BUR. OF ENGINEERING & CONSTRUCTION 9/12/80 DATE	DEPARTMENT OF PUBLIC WORKS STANDARD ROAD & STREET DESIGN **MINOR RURAL STREET** LOTS ≥ 1 ACRE & FRONTAGE ≥ 150 FEET	ISSUED: AUGUST, 1997 REVISED: REVISED: PLATE **R-I-1**

BALTIMORE COUNTY, MARYLAND

INTER-OFFICE CORRESPONDENCE

TO: Timothy M. Kotroco, Director
Department of Permits and
Development Management

DATE: August 10, 2007

FROM: Arnold F. 'Pat' Keller, III
Director, Office of Planning

SUBJECT: Zoning Advisory Petition(s): **Case(s) 08-045- Special Hearing**

The Office of Planning has reviewed the above referenced case(s) and has no comments to offer.

For further questions or additional information concerning the matters stated herein, please contact Jessie Bailek in the Office of Planning at 410-887-3480.

Prepared By: Cindy Murray

Division Chief: Lyn Lanham

CM/LL

W:\DEVREV\ZAC\8-045.doc

RE:	PETITION FOR SPECIAL HEARING Intersection of Flintstone & Cotter Roads; N/S Cotter Rd, 620' W Flintstone Road 6th Election & 3rd Councilmanic Districts Legal Owner(s): Freefollie Farms, LLC Petitioner(s)	* * * * * *	BEFORE THE ZONING COMMISSIONER FOR BALTIMORE COUNTY 08-045-SPH

* * * * * * * * * * * * *

ENTRY OF APPEARANCE

Please enter the appearance of People's Counsel in the above-captioned matter. Notice should be sent of any hearing dates or other proceedings in this matter and the passage of any preliminary or final Order. All parties should copy People's Counsel on all correspondence sent and all documentation filed in the case.

Peter Max Zimmerman
PETER MAX ZIMMERMAN
People's Counsel for Baltimore County

Carole S. Demilio
CAROLE S. DEMILIO
Deputy People's Counsel
Old Courthouse, Room 47
400 Washington Avenue
Towson, MD 21204
(410) 887-2188

CERTIFICATE OF SERVICE

I HEREBY CERTIFY that on this 3rd day of August, 2007, a copy of the foregoing Entry of Appearance was mailed to, Robert Douglas, DLA Piper USA, LLC, 6225 Smith Avenue, Baltimore, MD 21209, Representative for Petitioner(s).

RECEIVED
AUG 03 2007
Per.....

Peter Max Zimmerman
PETER MAX ZIMMERMAN
People's Counsel for Baltimore County

A. PREPARER OF PLAN	OWNER	DEVELOPER	TAX ACCOUNTS
Name: Matis Warfield, Inc. Address: 10540 York Road Suite M Hunt Valley, Maryland 21030	Name: Freefollie Farms, LLC Address: C/O Bob Douglas 6225 Smith Ave Baltimore, MD 21209	Name: Freefollie Farms, LLC Address: C/O Bob Douglas 6225 Smith Ave Baltimore, MD 21209	Number: 0618000100 (parcel 31) 0618000101 (parcel 57) Tax Map 5

B. ENVIRONMENTAL INFORMATION

Existing	Not Existing	Field Delineated	Field Verified		REMARKS
×				Topography and street grades (minimum 5 ft. contour appropriately labeled)	FROM BALTIMORE COUNTY GIS TOPO
×				Slopes greater than 25%	Shaded Gray
×			×	100 year floodplain	From Matis Warfield, Inc. Study
×				Soils mapped according to Soil Survey, Baltimore County, Maryland.	
×			×	Streams, seeps, ponds or other water bodies shown on site and within 200 ft. of site boundaries	
×		×	×	Wetlands	FIELD LOCATED BY ECO SCIENSE, INC.
×			×	Forest buffer limits including adjustments for steep slopes and/or erodible soils	Computed By ECO SCIENCE, INC.
×				Land cover on and within 200 ft. of site	
	×			Significant regulated plant or wildlife communities	
×			×	Wells on site or within 100 ft. of site	NONE PER ECO SCIENCE, INC.
×			×	Septic on site or within 100 ft. of site	
	×			Underground fuel tanks on site and within 100 ft. of site	
		×	×	Soil evaluation tests (perc tests) performed	

C: EXISITNG BUILT CONDITIONS

Existing	Not Existing		REMARKS
X		Locations of existing buildings within 200 ft. of site boundaries	
×		Location of existing roads within 200 ft. of site boundaries	
×		Designated historic sites	McCullough House BA-2351 (Adjacent Property)
	×	Designated archeological sites	
	×	Significant views	
	×	Significant features (specimen trees, buildings, streetscape, etc.)	
×		Land uses on and within 200 ft. of site	
×		Roads rights-of-way and easements	

D: COUNTY ADOPTED PLANS

Existing	Not Existing	In Conformance		REMARKS
×		×	Balto. Co. Master Plan 2001-2010	
	×		Community or Revitilization Plan(s)	
	×		Recreation and Parks Plan	
	×		Streetscape Plan	
	×		Greenways Plan	
	×		Other:	

E: SITE DEVELOPMENT PROPOSAL

Dwelling Type	Proposed Units	Parking Required	Parking Provided	Average Daily Trips	Phase	Development Schedule
SINGLE FAMILY SEMI-DETACHED	12	2 Per Dwelling	2 Per Dwelling	120	N/A	N/A
Total	12	2 Per Dwelling	2 Per Dwelling	120	N/A	N/A

F: CONSERVANCY AREA PROPOSAL (RC4 ON PARCEL 1 WITH AREA 58.90 ACRES)

OPEN SPACE TYPE	REQUIRED	PROVIDED
CONSERVANCY AREA	41.23 ACRES	41.53 ACRES (2 SWM AREAS INCLUDED)

G: SITE DEVELOPMENT PROPOSAL

DWELLING TYPE	PROPOSED UNITS	PARKING REQUIRED	PARKING PROVIDED	OPEN SPACE REQUIRED
SINGLE FAMILY DETACHED	12	(24) 2 PER DWELLING	24+	7,800 SF - 0.179 AC - ACTIVE (@650 SF/LOT * 12 LOTS) 4,200 SF - 0.096 AC - PASSIVE (@350SF/LOT * 12 LOTS) OR A COMBINATION 12,000 SF - 0.275 AC THEREOF AS SPECIFIED IN SECTION III.D.3

OPEN SPACE PROPOSED	AVERAGE DAILY TRIPS	PHASE	DEVELOPMENT SCHEDULE
NONE - LESS THAN 20 LOTS WAIVER REQUESTED & FEE IN LIEU TO BE PAID	80	N/A	N/A

SITE DATA

SITE ADDRESS: INTERSECTION OF THE FLINTSTONE ROAD AND COTTER ROAD
GROSS SITE AREA: 205.80 AC (8,964,648 SQ FT)
PARCEL 1: 82.60 AC (RC-2 15.09 AC, RC-4 66.44 AC, RC-8 1.29 AC)
PARCEL 2: 123.20 AC (RC-2 56.16 AC, RC-4 54.81 AC, RC-5 0.03 AC, RC-8 2.20 AC)
NET SITE AREA: 198.42 AC (8,643,175 SQ FT)

EXISTING USE: VACANT / AGRICULTURAL
PROPOSED USE: 12 Single Family Detached,
PREVIOUS PERMITS - UNKNOWN
DEVELOPMENT APPROVALS: NONE
PRIOR ZONING CASES:NONE
SIGNAGE -
NONE PROPOSED AT THIS TIME; HOWEVER ANY FUTURE SIGNAGE TO COMPLY WITH SECTION 450 BCZR AND ALL ZONING SIGN POLICIES.
AS KNOWN TO THE APPLICANT, THERE ARE NO KNOWN HAZARDOUS MATERIALS AS DEFINED BY SECTION 7-101 OF THE ENVIRONMENTAL ARTICLE OF THE ANNOTATED CODE OF MARYLAND, AS FROM TIME TO TIME AMENDED.
"Bureau of Traffic Enginering and Transportation Planning" has confirmed that the subject site is not within a traffic deficient area.

ADDITIONAL INFORMATION

BULK REGULATIONS FOR DEVELOPMENT:
RC-4 Zone:
MAXIMUM BUILDING HEIGHT=35-feet
Detached Single Family-Residential (minimum setbacks)
Front bldg face to public R/W or property line=25-feet
Front bldg face to paving of private road=35-feet
Bldg face to an adjacent RC-2 zone line=100-feet for dwellings
Bldg face to a reservoir property line=100-feet
Bldg face to an adjacent conservancy area which will be used for agricultural purposes=50-feet
Side bldg face to tract boundary=25-feet
Setbacks to be increased by 20-feet when adjacent to an Arterial Street
RC-2 Zone
MAXIMUM BUILDING HEIGHT=35-feet
Detached Single Family-Residential (minimum setbacks)
No principal buildings or dwelling in an RC-2 Zone may be situated within 75 feet of the center line of any street or within 35 feet of any lot line other than a street line

OPEN SPACE

Open Space Required - 7,800-sf Active and 4,200-sf Passive of a combination thereof as specified in Section III.D.3; Open Space Provided 0-sf; Waiver requested and fee in lieu to be paid.

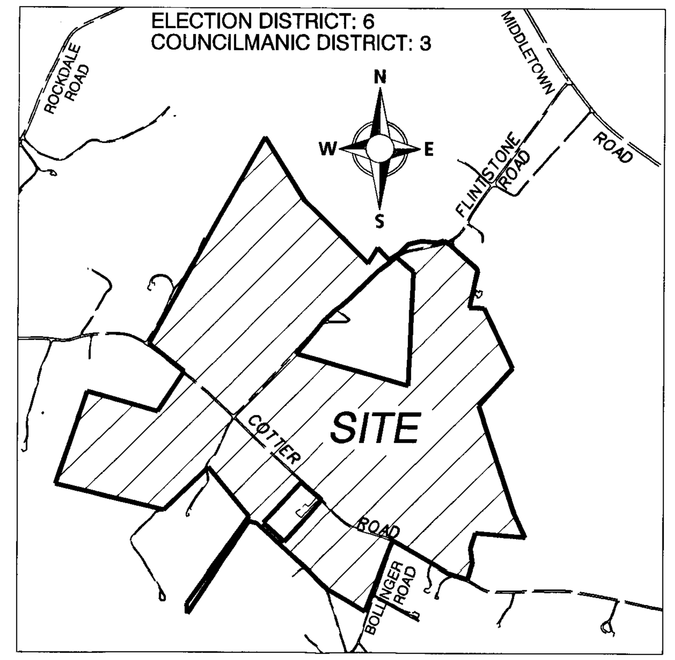

VICINITY MAP

SCALE: 1" = 1000'

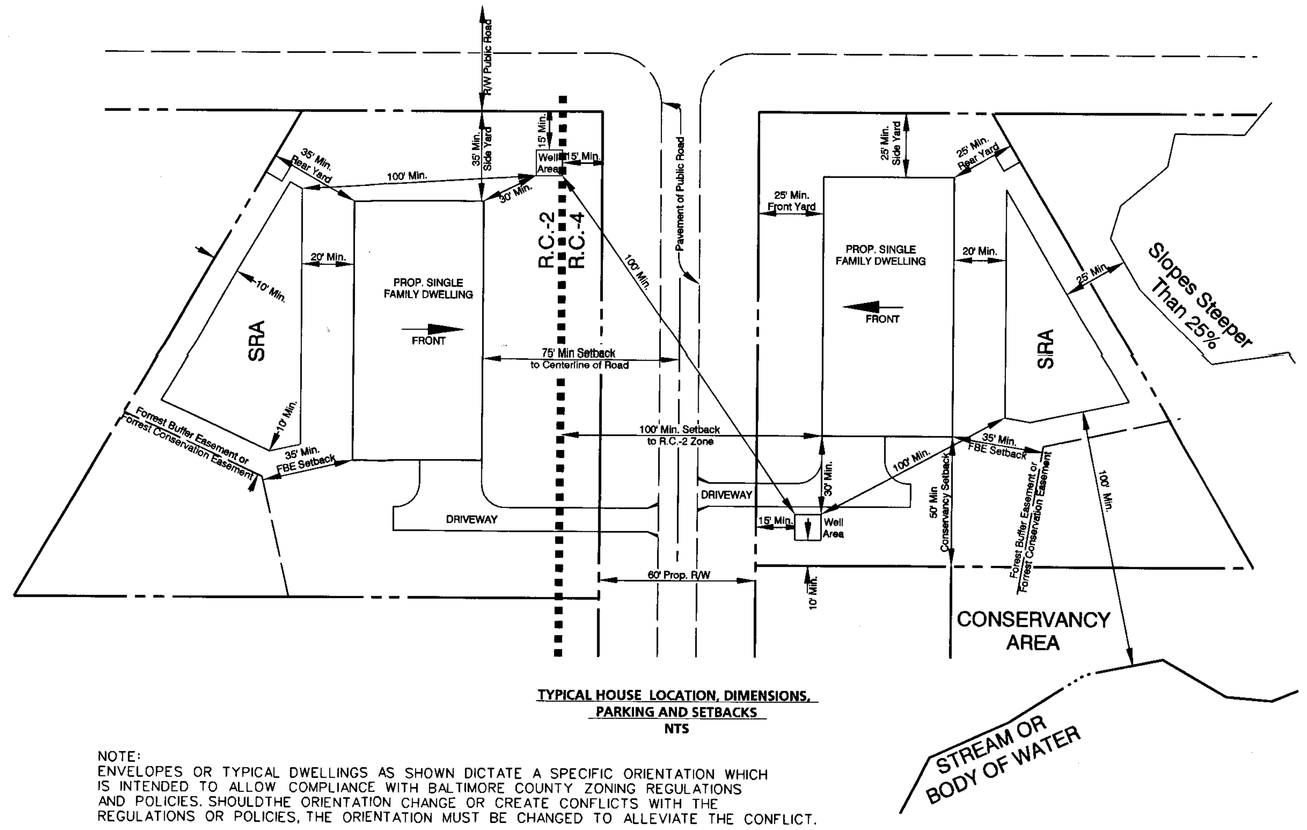

TYPICAL HOUSE LOCATION, DIMENSIONS, PARKING AND SETBACKS
NTS

NOTE:
ENVELOPES OR TYPICAL DWELLINGS AS SHOWN DICTATE A SPECIFIC ORIENTATION WHICH IS INTENDED TO ALLOW COMPLIANCE WITH BALTIMORE COUNTY ZONING REGULATIONS AND POLICIES. SHOULDTHE ORIENTATION CHANGE OR CREATE CONFLICTS WITH THE REGULATIONS OR POLICIES, THE ORIENTATION MUST BE CHANGED TO ALLEVIATE THE CONFLICT.

LEGEND

EXISTING CONTOURS — 620 — 622
SLOPES 25% OR STEEPER
SOIL TYPE BOUNDARY — GgB2 (B) / CgB2(B)
EXISTING TREE LINE
PROPOSED LOT • — LOT • 9
Property Line
Proposed Contour — 420
Existing edge of pavement Proposed Conc. Curb
Zoning Line — M.L. D.R. 2
Forest Conservation Easement — FCE
Forest Buffer Easement — FBE
Limit Of Disturbance — LOD
Flood Plain — FP
Proposed Streetlight
Existing Building
Proposed Building
Wetlands — W
Calculated Forest Buffer — FB
100-YR WSEL
Proposed Septic Reserve Area
Proposed Well Area
Passed Perc Test
Failed Perc Test
Existing Well

DRAWING LIST

Zon1	TITLE SHEET
Zon2	ZONING PLAN

Date	Issue
07/25/2007	1st Submittal

1. Stormwater Management Facilities will be publicly owned and maintained
2. No Access Easements are necessary for Stormwater Management, Forest Buffer, and Forest Conservation Easement areas because they all abut a public road.
3. Location of streetlights will be provided on the Phase-2 plans for this development.
4. ENVELOPES SHOWN HEREON ARE FOR THE LOCATION OF ALL PRINCIPAL BUILDINGS ONLY. ACCESSORY STRUCTURES, FENCES, AND PROJECTIONS INTO YARDS MAY BE CONSTRUCTED OUTSIDE THE ENVELOPE, BUT MUST COMPLY WITH SECTIONS 400 AND 301 OF THE BALTIMORE COUNTY ZONING REGULATIONS. (SUBJECT TO COVENANTS AND APPLICABLE BUILDING PERMITS.)
5. TAX ACCOUNT NO.: PARCEL 31 - 0618000100 PARCEL 57 - 0618000101
6. DEED REFERENCE: LIBER 14119, FOLIO 738
7. TAX MAP 5, 6, 10, & 11 PARCELS 31 & 57
8. TOPOGRAPHY SHOWN HEREON IS TAKEN FROM BALTIMORE COUNTY GIS TOPO TILES 005C2, 005C3, 006A2, 006A3, 010C1, & 011A1
9. ALL LOTS SHOWN HEREON TO BE SERVED BY ITS OWN PRIVATE SEPTIC RESERVE AREA AND WELL.
10. THERE ARE NO EXISTING WELL AND SEPTIC SYSTEMS WITHIN THE PROPERTY BOUNDARY.
11. THIS SITE IS DESIGNATED ON WATER PLAN MAP W4A AS W-7 (NO PLANNED SERVICE) AND ON SEWER PLAN MAP S4A AS S-7 (NO PLANNED SERVICE)
12. ALL PROPOSED BUILDINGS ARE PROPOSED TO HAVE A HEIGHT LESS THAN OR EQUAL TO THE ALLOWABLE HEIGHT OF 35 FEET.

DEVELOPER'S EXHIBIT NO. 7

ZONING HEARING REQUEST:
Waiver of public works standards for Widening of Flintstone Road

"Professional Certification.
I hereby certify that these documents were prepared or approved by me, and that I am duly licensed professional engineer under the laws of the state of Maryland, License No. 21162, Expiration Date: 03-20-2008."

Matis Warfield
consulting engineers
10540 york road suite m
hunt valley, maryland 21030
phone 410-683-7004
facsimile 410-683-1798
www.matiswarfield.com

PLAN TO ACCOMPANY PETITION FOR SPECIAL HEARING
RAUH PROPERTY

PDM File#: VI(6)-303

BALTIMORE COUNTY, MARYLAND
ELECTION DISTRICT: 6
COUNCILMANIC DISTRICT: 3
CENSUS TRACT: 4060

WATERSHED: 2 PRETTYBOY
REGIONAL PLANNING DISTRICT: 301B
200 FOOT SCALE ZONING MAP #: 5C3, 6A3, 10C1, 11A1

Zon1

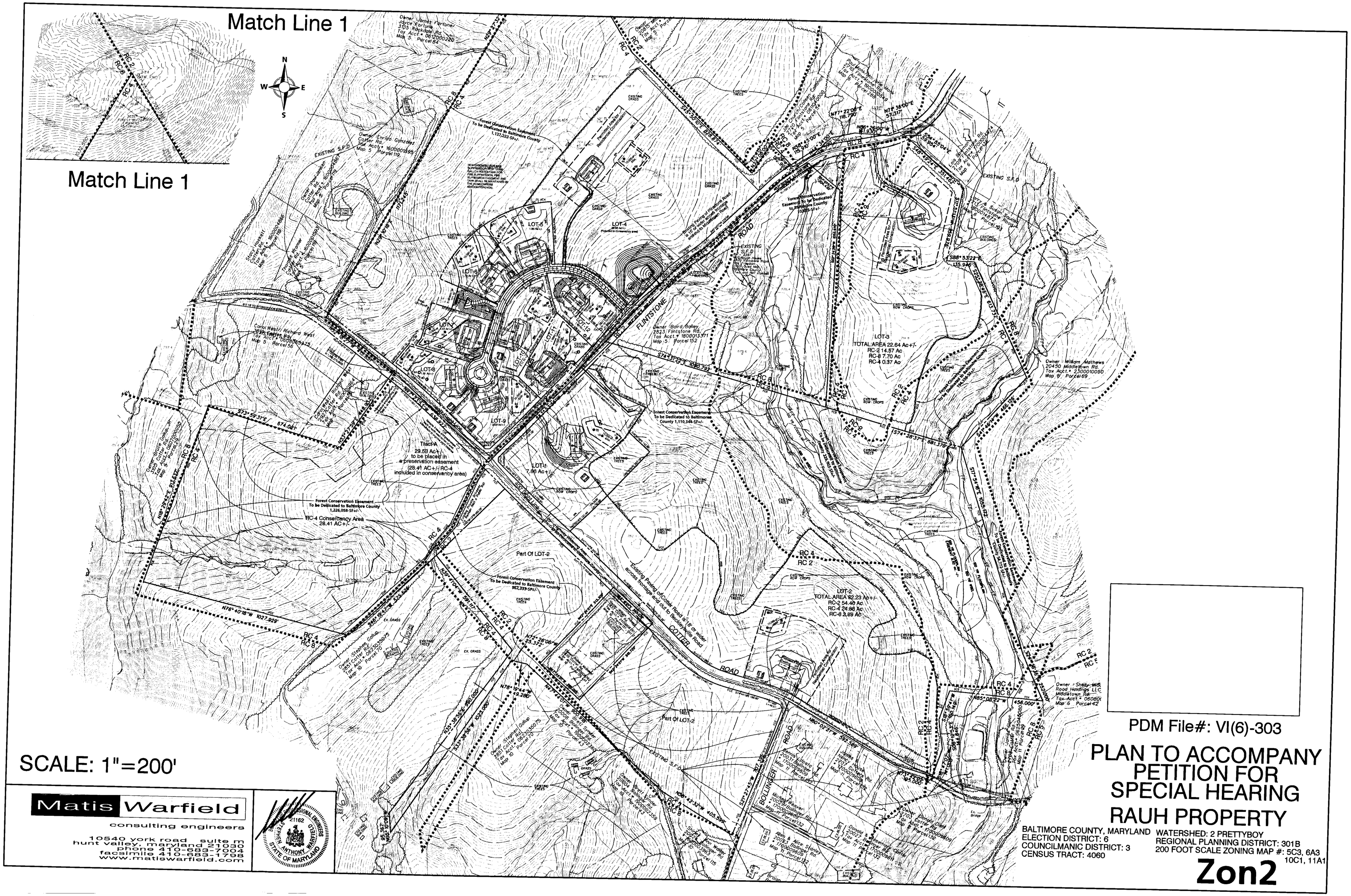
Match Line 1
Match Line 1
N
S
E
W
FLINTSTONE ROAD
COTTAGE ROAD
BOLLINGER ROAD
LOT-3
TOTAL AREA 22.64 Ac+/-
RC-2 14.57 Ac
RC-8 7.70 Ac
RC-4 0.37 Ac
LOT-2
TOTAL AREA 82.23 Ac+/-
RC-2 54.49 Ac
RC-4 24.98 Ac
RC-8 2.89 Ac
Track A
29.69 Ac+/-
to be placed in a preservation easement
(28.41 AC+/-RC-4 included in conservancy area)
RC-4 Conservancy Area
28.41 AC+/-
Forest Conservation Easement
To be Dedicated to Baltimore County
1,226,058-SF+/-
Forest Conservation Easement
To be Dedicated to Baltimore County
902,335-SF+/-
Forest Conservation Easement
To be Dedicated to Baltimore County
1,110,346-SF+/-
Part Of LOT-2
Existing Paved off-Cottage Road 6"18' or wider access frontage and out to Beckleysville Road
Owner: William Mathews
20450 Middletown Rd.
Tax Acct.# 2300010050
Map 9 Parcel 69
Owner: Boird/Abney
2623 Flintstone Rd.
Tax Acct.# 1800013371
Map 5 Parcel 152
Owner: Stephen Gollub
2651 Cotter Rd.
Tax Acct.# 0600230075
Map 10 Parcel 70
Owner: Carol Westfall Richard West
2630 Cotter Rd.
Tax Acct.# 0600065375
Map 5 Parcel 56
Owner: Enrique Gohzalez
Cotter Rd.
Tax Acct.# 1600001895
Map 5 Parcel 110
Owner: Thomas Fortunel
Joyce Fortunel
1355 Rockdale Rd.
Tax Acct.# 0612000220
Map 5 Parcel 84
Owner: Shelly Rood
Rood Holdings LLC
Middletown Rd.
Tax Acct.# 0608001
Map 6 Parcel 42
Owner: Jimmy Sweet
Tax Acct.# 0600014008
Map 11 Parcel 89
Owner: Donald Lee
Map 11 Parcel 132
Owner: Donald Lee
Map 11 Parcel 115
Owner: Stephen Gollub
2651 Cotter Rd.
Tax Acct.# 0600230075
Map 10 Parcel 70
Owner: Stephen Gollub
2651 Cotter Rd.
Tax Acct.# 0600230075
Map 10 Parcel 71
Owner: Verell Lowe
Map 11 Parcel 132
Owner: Jack & Alice Sleppy
Map 11 Parcel 132
Owner: Michael Hawkins
Map 11 Parcel 132
Owner: Michael Hawkins
Map 11 Parcel 132
Owner: Michael Hawkins

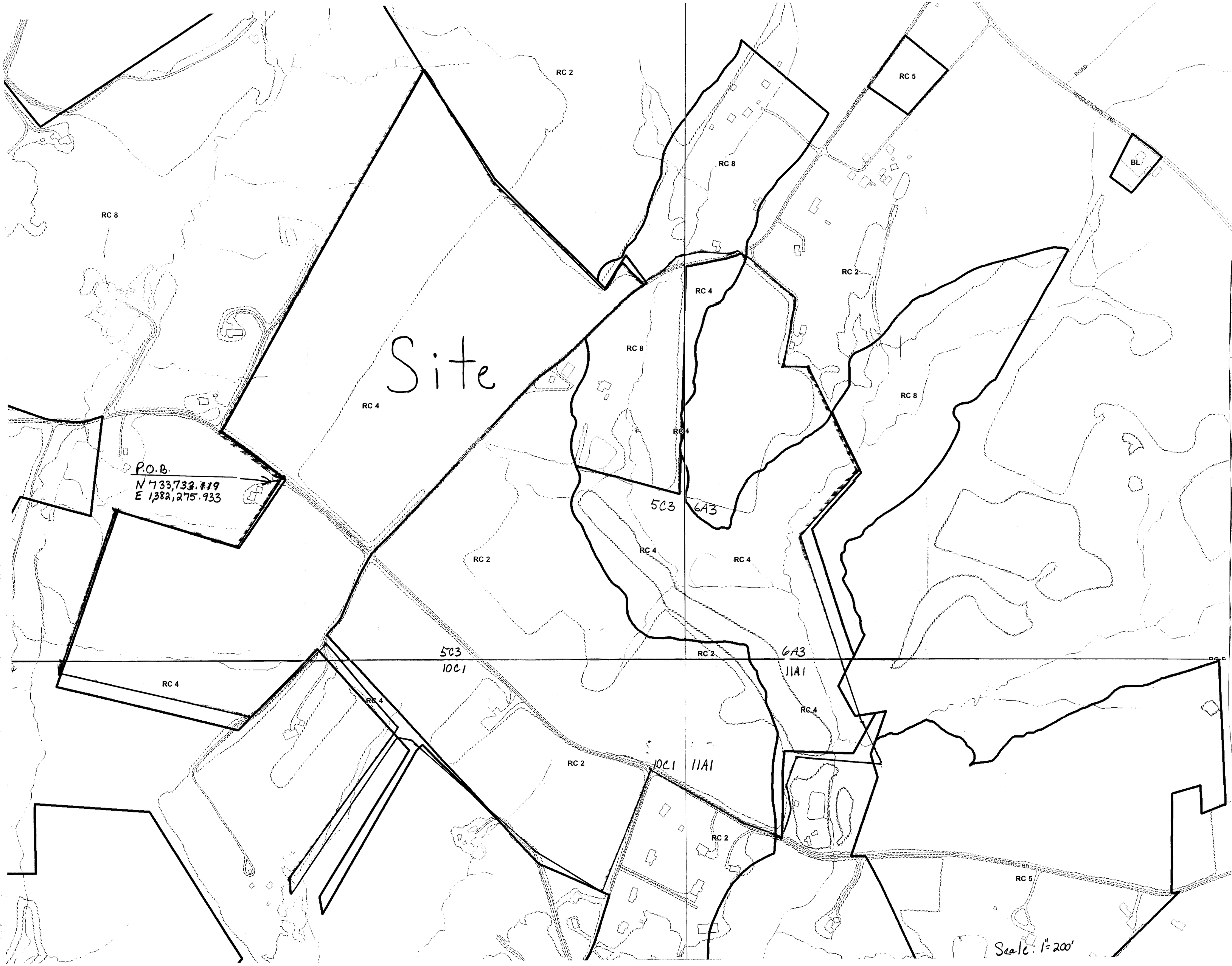
RC 2
RC 5
RC 8
BL
RC 8
RC 2
RC 4
Site
RC 8
RC 8
RC 4
RC 4
P.O.B.
N 733,733.819
E 1,382,275.933
5C3
6A3
RC 2
RC 4
RC 4
5C3
10C1
RC 2
6A3
11A1
RC 4
RC 4
RC 4
RC 2
10C1
11A1
RC 2
RC 5
Scale: 1"=200'

A. PREPARER OF PLAN	OWNER	DEVELOPER	TAX ACCOUNTS
Name: Matis Warfield, Inc. Address: 10540 York Road Suite M Hunt Valley, Maryland 21030	Name: Freefollie Farms, LLC Address: C/O Bob Douglas 6225 Smith Ave Baltimore, MD 21209	Name: Freefollie Farms, LLC Address: C/O Bob Douglas 6225 Smith Ave Baltimore, MD 21209	Number: 0618000100 (parcel 31) 0618000101 (parcel 57) Tax Map 5

B. ENVIRONMENTAL INFORMATION

Existing	Not Existing	Field Delineated	Field Verified		REMARKS
×				Topography and street grades (minimum 5 ft. contour appropriately labeled)	FROM BALTIMORE COUNTY GIS TOPO
×				Slopes greater than 25%	Shaded Gray
×			×	100 year floodplain	From Matis Warfield, Inc. Study
×				Soils mapped according to Soil Survey, Baltimore County, Maryland.	
×			×	Streams, seeps, ponds or other water bodies shown on site and within 200 ft. of site boundaries	
×		×	×	Wetlands	FIELD LOCATED BY ECO SCIENSE, INC.
×			×	Forest buffer limits including adjustments for steep slopes and/or erodible soils	Computed By ECO SCIENCE, INC.
×				Land cover on and within 200 ft. of site	
	×			Significant regulated plant or wildlife communities	
×			×	Wells on site or within 100 ft. of site	NONE PER ECO SCIENCE, INC.
×			×	Septic on site or within 100 ft. of site	
	×			Underground fuel tanks on site and within 100 ft. of site	
		×	×	Soil evaluation tests (perc tests) performed	

C: EXISITNG BUILT CONDITIONS

Existing	Not Existing		REMARKS
×		Locations of existing buildings within 200 ft. of site boundaries	
×		Location of existing roads within 200 ft. of site boundaries	
×		Designated historic sites	McCullough House BA-2351 (Adjacent Property)
	×	Designated archeological sites	
	×	Significant views	
	×	Significant features (specimen trees, buildings, streetscape, etc.)	
×		Land uses on and within 200 ft. of site	
×		Roads rights-of-way and easements	

D: COUNTY ADOPTED PLANS

Existing	Not Existing	In Conformance		REMARKS
×		×	Balto. Co. Master Plan 2001-2010	
	×		Community or Revitilization Plan(s)	
	×		Recreation and Parks Plan	
	×		Streetscape Plan	
	×		Greenways Plan	
	×		Other:	

E: SITE DEVELOPMENT PROPOSAL

Dwelling Type	Proposed Units	Parking Required	Parking Provided	Average Daily Trips	Phase	Development Schedule
SINGLE FAMILY SEMI-DETACHED	12	2 Per Dwelling	2 Per Dwelling	120	N/A	N/A
Total	12	2 Per Dwelling	2 Per Dwelling	120	N/A	N/A

F: CONSERVANCY AREA PROPOSAL (RC4 ON PARCEL 1 WITH AREA 58.90 ACRES)

OPEN SPACE TYPE	REQUIRED	PROVIDED
CONSERVANCY AREA	41.23 ACRES	41.53 ACRES (2 SWM AREAS INCLUDED)

G: SITE DEVELOPMENT PROPOSAL

DWELLING TYPE	PROPOSED UNITS	PARKING REQUIRED	PARKING PROVIDED	OPEN SPACE REQUIRED
SINGLE FAMILY DETACHED	12	(24) 2 PER DWELLING	24+	7,800 SF - 0.179 AC - ACTIVE (@650 SF/LOT • 12 LOTS) 4,200 SF - 0.096 AC - PASSIVE (@350SF/LOT • 12 LOTS) OR A COMBINATION 12,000 SF - 0.275 AC THEREOF AS SPECIFIED IN SECTION III.D.3

OPEN SPACE PROPOSED	AVERAGE DAILY TRIPS	PHASE	DEVELOPMENT SCHEDULE
NONE - LESS THAN 20 LOTS WAIVER REQUESTED & FEE IN LIEU TO BE PAID	80	N/A	N/A

SITE DATA

SITE ADDRESS: INTERSECTION OF THE FLINTSTONE ROAD AND COTTER ROAD
GROSS SITE AREA: 205.80 AC (8,964,648 SQ FT)
PARCEL 1: 82.60 AC (RC-2 15.09 AC, RC-4 66.44 AC, RC-8 1.29 AC)
PARCEL 2: 123.20 AC (RC-2 66.16 AC, RC-4 54.81 AC, RC-5 0.03 AC, RC-8 2.20 AC)
NET SITE AREA: 198.42 AC (8,643,175 SQ FT)

EXISTING USE: VACANT / AGRICULTURAL
PROPOSED USE: 12 Single Family Detached,
PREVIOUS PERMITS - UNKNOWN
DEVELOPMENT APPROVALS: NONE
PRIOR ZONING CASES:NONE
SIGNAGE -
NONE PROPOSED AT THIS TIME; HOWEVER ANY FUTURE SIGNAGE TO COMPLY WITH SECTION 450 BCZR AND ALL ZONING SIGN POLICIES.
AS KNOWN TO THE APPLICANT, THERE ARE NO KNOWN HAZARDOUS MATERIALS AS DEFINED BY SECTION 7-101 OF THE ENVIRONMENTAL ARTICLE OF THE ANNOTATED CODE OF MARYLAND, AS FROM TIME TO TIME AMENDED.
"Bureau of Traffic Enginering and Transportation Planning" has confirmed that the subject site is not within a traffic deficient area.

ADDITIONAL INFORMATION

BULK REGULATIONS FOR DEVELOPMENT:
RC-4 Zone:
MAXIMUM BUILDING HEIGHT•35-feet
Detached Single Family-Residential (minimum setbacks)
Front bldg face to public R/W or property line•25-feet
Front bldg face to paving of private road•35-feet
Bldg face to an adjacent RC-2 zone line•100-feet for dwellings
Bldg face to a reservoir property line•100-feet
Bldg face to an adjacent conservancy area which will be used for agricultural purposes•50-feet
Side bldg face to tract boundary•25-feet
Setbacks to be increased by 20-feet when adjacent to an Arterial Street
RC-2 Zone
MAXIMUM BUILDING HEIGHT•35-feet
Detached Single Family-Residential (minimum setbacks)
No principal buildings or dwelling in an RC-2 Zone may be situated within 75 feet of the center line of any street or within 35 feet of any lot line other than a street line

OPEN SPACE

Open Space Required - 7,800-sf Active and 4,200-sf Passive of a combination thereof as specified in Section III.D.3; Open Space Provided 0-sf; Waiver requested and fee in lieu to be paid.

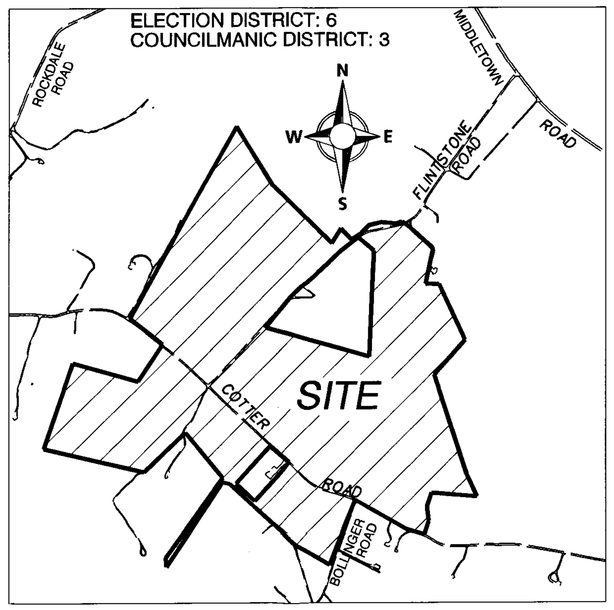

VICINITY MAP

SCALE: 1" = 1000'

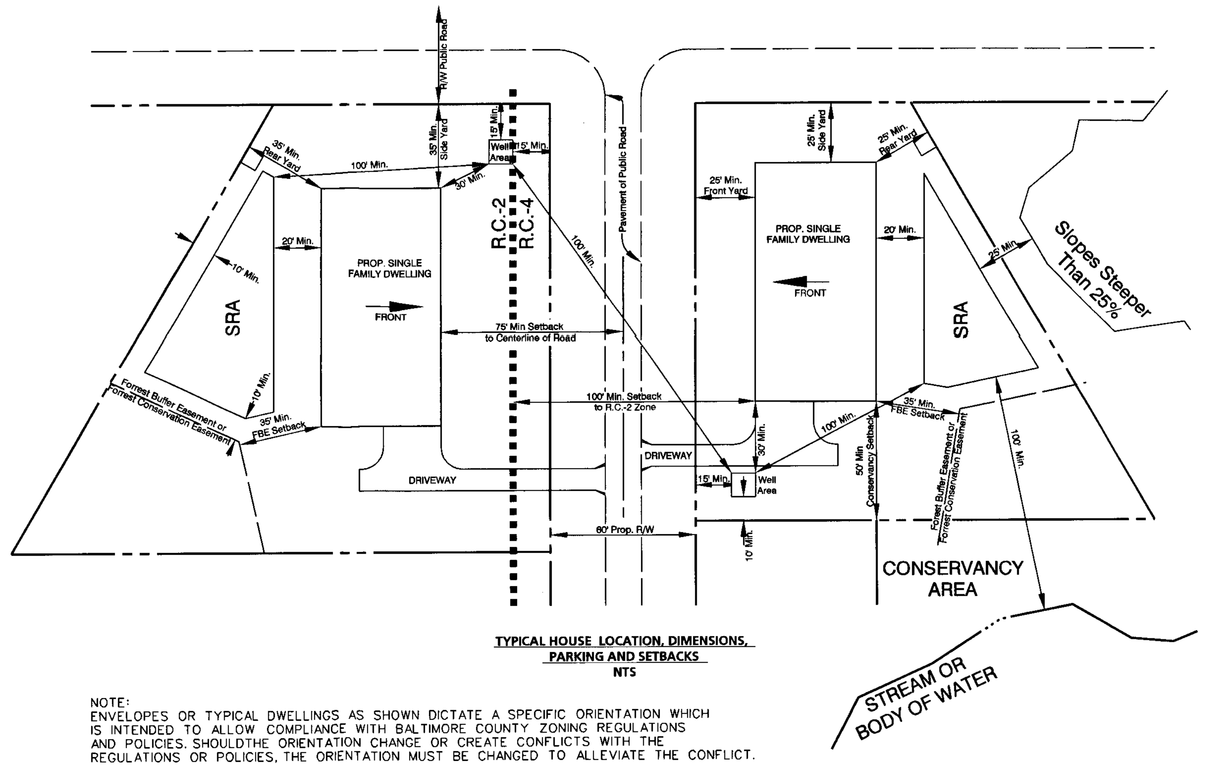

TYPICAL HOUSE LOCATION, DIMENSIONS, PARKING AND SETBACKS
NTS

NOTE:
ENVELOPES OR TYPICAL DWELLINGS AS SHOWN DICTATE A SPECIFIC ORIENTATION WHICH IS INTENDED TO ALLOW COMPLIANCE WITH BALTIMORE COUNTY ZONING REGULATIONS AND POLICIES. SHOULDTHE ORIENTATION CHANGE OR CREATE CONFLICTS WITH THE REGULATIONS OR POLICIES, THE ORIENTATION MUST BE CHANGED TO ALLEVIATE THE CONFLICT.

LEGEND

EXISTING CONTOURS — 620 — 622
SLOPES 25% OR STEEPER
SOIL TYPE BOUNDARY — CgB2 (B) / CgB2(B)
EXISTING TREE LINE
PROPOSED LOT • — LOT • 9
Property Line
Proposed Contour — 420
Existing edge of pavement
Proposed Conc. Curb
Zoning Line — M.L. / D.R. 2
Forest Conservation Easement — FCE
Forest Buffer Easement — FBE
Limit Of Disturbance — LOD
Flood Plain — FP
Proposed Streetlight
Existing Building
Proposed Building
Wetlands — W
Calculated Forest Buffer — FB
100-YR WSEL
Proposed Septic Reserve Area
Proposed Well Area
Passed Perc Test
Failed Perc Test
Existing Well

DRAWING LIST

Zon1	TITLE SHEET
Zon2	ZONING PLAN

Date	Issue
07/25/2007	1st Submittal

1. Stormwater Management Facilities will be publicly owned and maintained
2. No Access Easements are necessary for Stormwater Management, Forest Buffer, and Forest Conservation Easement areas because they all abut a public road.
3. Location of streetlights will be provided on the Phase-2 plans for this development.
4. ENVELOPES SHOWN HEREON ARE FOR THE LOCATION OF ALL PRINCIPAL BUILDINGS ONLY. ACCESSORY STRUCTURES, FENCES, AND PROJECTIONS INTO YARDS MAY BE CONSTRUCTED OUTSIDE THE ENVELOPE, BUT MUST COMPLY WITH SECTIONS 400 AND 301 OF THE BALTIMORE COUNTY ZONING REGULATIONS. (SUBJECT TO COVENANTS AND APPLICABLE BUILDING PERMITS.)
5. TAX ACCOUNT NO.: PARCEL 31 - 0618000100 PARCEL 57 - 0618000101
6. DEED REFERENCE: LIBER 14119, FOLIO 738
7. TAX MAP 5, 6, 10, & 11 PARCELS 31 & 57
8. TOPOGRAPHY SHOWN HEREON IS TAKEN FROM BALTIMORE COUNTY GIS TOPO TILES 005C2, 005C3, 006A2, 006A3, 010C1, & 011A1
9. ALL LOTS SHOWN HEREON TO BE SERVED BY ITS OWN PRIVATE SEPTIC RESERVE AREA AND WELL.
10. THERE ARE NO EXISTING WELL AND SEPTIC SYSTEMS WITHIN THE PROPERTY BOUNDARY.
11. THIS SITE IS DESIGNATED ON WATER PLAN MAP W4A AS W-7 (NO PLANNED SERVICE) AND ON SEWER PLAN MAP S4A AS S-7 (NO PLANNED SERVICE)
12. ALL PROPOSED BUILDINGS ARE PROPOSED TO HAVE A HEIGHT LESS THAN OR EQUAL TO THE ALLOWABLE HEIGHT OF 35 FEET.

ZONING HEARING REQUEST:
Waiver of public works standards for Widening of Flintstone Road

"Professional Certification.
I hereby certify that these documents were prepared or approved by me, and that I am duly licensed professional engineer under the laws of the state of Maryland, License No. 21162, Expiration Date: 03-20-2008."

Matis Warfield
consulting engineers
10540 york road suite m
hunt valley, maryland 21030
phone 410-683-7004
facsimile 410-683-1798
www.matiswarfield.com

PROFESSIONAL ENGINEER 21162 ANTHONY M. MATISCHEN STATE OF MARYLAND

PLAN TO ACCOMPANY PETITION FOR SPECIAL HEARING
RAUH PROPERTY

PDM File#: VI(6)-303

BALTIMORE COUNTY, MARYLAND
ELECTION DISTRICT: 6
COUNCILMANIC DISTRICT: 3
CENSUS TRACT: 4060

WATERSHED: 2 PRETTYBOY
REGIONAL PLANNING DISTRICT: 301B
200 FOOT SCALE ZONING MAP #: 5C3, 6A3, 10C1, 11A1

Zon1

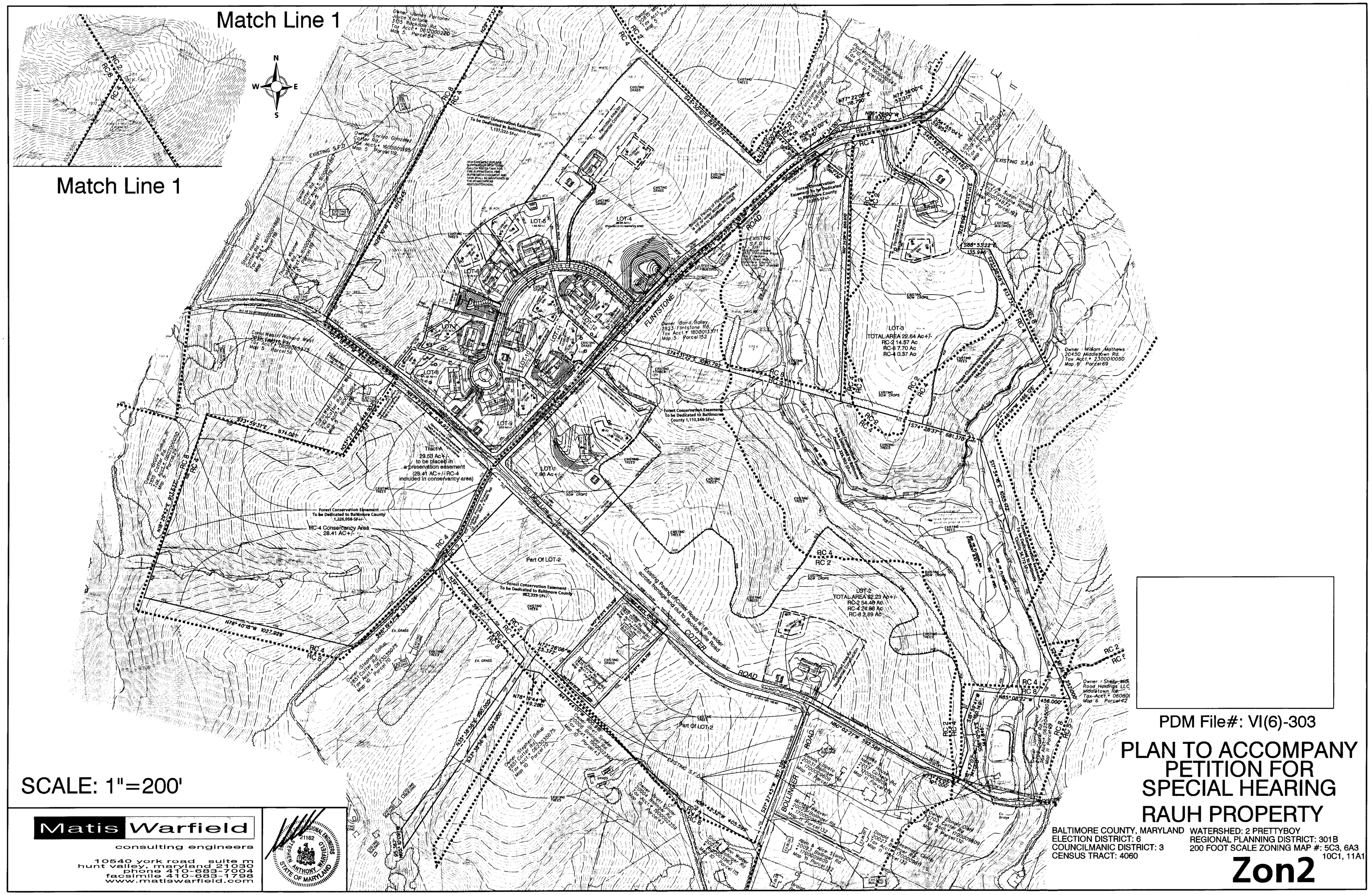
Match Line 1
Match Line 1
N
S
E
W
FLINTSTONE ROAD
COTTER ROAD
BOLLINGER ROAD
LOT-3
TOTAL AREA 22.64 Ac+/-
RC-2 14.57 Ac
RC-8 7.70 Ac
RC-4 0.37 Ac
LOT-2
TOTAL AREA 32.23 Ac+/-
RC-2 54.49 Ac
RC-4 24.88 Ac
RC-8 2.89 Ac
Tract A
29.59 Ac+/-
to be placed in
a preservation easement
(28.41 AC+/- RC-4
included in conservancy area)
RC-4 Conservancy Area
28.41 AC+/-
Forest Conservation Easement
To be Dedicated to Baltimore County
1,226,058-SF+/-
Forest Conservation Easement
To be Dedicated to Baltimore County
1,110,348-SF+/-
Forest Conservation Easement
To be Dedicated to Baltimore County
862,733-SF+/-
Part Of LOT-2
Part Of LOT-2
Existing Paving of Cotter Road 18' or wider
across frontage and out to Bollinger Road
Owner: Boird, Bailey
2823 Flintstone Rd.
Tax Acct.# 1800013371
Map 5 Parcel 152
Owner: William Mathews
20450 Middletown Rd.
Tax Acct.# 2300010050
Map 6 Parcel 69
Owner: Stephen Gallup
2824 Cotter Rd.
Tax Acct.# 0600030075
Map 10 Parcel 10
Owner: Carol West / Richard West
2830 Cotter Rd.
Tax Acct.# 0600030325
Map 10 Parcel 56
Owner: Enrico Ghizzetti
Cotter Rd.
Tax Acct.# 1600000595
Map 5 Parcel 119
Owner: Joyce Fortuner
3105 Rockdale Rd.
Tax Acct.# 0600000220
Map 5 Parcel 93
Owner: Shelby Road Holdings LLC
Middletown Rd.
Tax Acct.# 0600000042
Map 6 Parcel 42
Owner: Carol Cotter
2828 Cotter Rd.
Tax Acct.# 0600030075
Map 10 Parcel 10
Owner: Stephen Gallup
2824 Cotter Rd.
Tax Acct.# 0600030075
Map 10 Parcel 10
Owner: Smoker
2008 Bollinger Rd.
Tax Acct.# 0600002309
Map 10 Parcel 41
Owner: Donald Corrigan
2700 Bollinger Rd.
Tax Acct.# 0600002309
Map 11