SPARKS WATER PUMPING STATION AND ELEVATED WATER STORAGE TANK IMPROVEMENTS

BALTIMORE COUNTY, MARYLAND

CONTRACT NO. 20094 WXO

NOTES:

1. ALL CONSTRUCTION SHALL BE IN ACCORDANCE WITH BALTIMORE COUNTY'S "STANDARD SPECIFICATIONS FOR CONSTRUCTION AND MATERIALS" AND "STANDARD DETAILS FOR CONSTRUCTION", LATEST EDITIONS.
2. THE CONTRACTOR SHALL NOTIFY MISS UTILITY AT (800) 257-7777 AT LEAST 48 HOURS PRIOR TO STARTING EXCAVATION.
3. ALL CONNECTIONS TO EXISTING UTILITIES BUILT BY OTHERS SHALL BE PERFORMED UNDER THIS CONTRACT.
4. THE LOCATION OF UNDERGROUND UTILITIES AS SHOWN HEREON ARE BASED ON ABOVE GROUND FIELD OBSERVATIONS AND RECORD DRAWINGS. ADDITIONAL BURIED UTILITIES OR STRUCTURES MAY BE ENCOUNTERED. NO EXCAVATIONS WERE MADE DURING THE PROGRESS OF THIS SURVEY TO LOCATE BURIED UTILITIES/STRUCTURES. THE CONTRACTOR IS SOLELY RESPONSIBLE FOR VERIFYING THE UNDERGROUND UTILITIES BY TEST PITS TO HIS SATISFACTION. NO ADDITIONAL COST OR TIME WILL BE PROVIDED FOR VERIFICATION OF UNDERGROUND UTILITIES.
5. THE CONTRACTOR SHALL LOCATE ALL EXISTING UTILITIES PRIOR TO EXCAVATION AND SHALL PROTECT THEM DURING CONSTRUCTION. IN CASE OF BREAKAGE OF ANY EXISTING WATER/SEWER PIPE, RESULTANT SEWER OVERFLOW AND/OR SPILL SHALL IMMEDIATELY BE REPORTED TO THE ENGINEER. THE CONTRACTOR SHALL BE LIABLE FOR ALL SEWAGE OVERFLOW AND/OR SPILL, CLEAN UP COST INCURRED BY THE OWNER AND/OR STATE OF MARYLAND AND ALSO SHALL BE LIABLE FOR ANY CIVIL AND OR CRIMINAL PENALTIES ASSOCIATED WITH SUCH OVERFLOWS AND/OR SPILLS.
6. THE CONTRACTOR SHALL PROTECT ALL TREES FROM DAMAGE BEYOND THE LIMITS OF DISTURBANCE. ANY DAMAGE SHALL BE RECTIFIED TO THE SATISFACTION OF THE OWNER.
7. THE CONTRACTOR SHALL BE RESPONSIBLE FOR ACQUIRING ALL PERMITS NECESSARY FOR CONSTRUCTION. THE CONTRACTOR SHALL NOTIFY THE OWNER AND ENGINEER OF ANY CHANGES OR CONDITIONS REQUIRED BY ANY PERMIT.
8. DO NOT SCALE DRAWINGS. THE CONTRACTOR IS RESPONSIBLE TO SEEK CLARIFICATION PRIOR TO BID. WHEN CONFLICTS ARISE, IT IS ASSUMED THE CONTRACTOR HAS BASED HIS BID ON THE MORE EXPENSIVE OPTION.
9. THE CONTRACTOR'S ATTENTION IS DIRECTED TO THE FACT THAT WATER PUMPING STATIONS ARE INTEGRAL COMPONENTS OF THE BALTIMORE CITY WATER CONVEYANCE SYSTEM AND AS SUCH SHALL REMAIN FULLY OPERATIVE AT ALL TIMES. SHOULD THE CONTRACTOR DESIRE CERTAIN ELECTRICAL AND/OR MECHANICAL FUNCTIONS TO BE RENDERED COMPLETELY OPERATIVE OR INOPERATIVE, HE SHALL INFORM THE BALTIMORE CITY ENVIRONMENTAL SERVICES DIVISION, IN WRITING, A MINIMUM OF FIVE (5) DAYS PRIOR TO THE DATE HE DESIRES THOSE FUNCTIONS TO BE CHANGED. ALL SUCH CHANGES AND ADJUSTMENTS OF MECHANICAL AND/OR ELECTRICAL FUNCTIONS, IF AND AS APPROVED BY THE CHIEF, ENVIRONMENTAL SERVICES DIVISION, SHALL BE PERFORMED BY THE CONTRACTOR BUT ONLY IN THE PRESENCE OF AN AUTHORIZED CITY REPRESENTATIVE WHO WILL BE ASSIGNED TO WITNESS SUCH OPERATIONS.
10. CONSTRUCTION SHALL CONFORM TO ALL APPLICABLE FEDERAL, STATE, AND LOCAL STANDARDS, SPECIFICATIONS, AND REQUIREMENTS.
11. THE CONTRACTOR SHALL REFER TO THE HAZMAT REPORT FOUND IN SPECIFICATION 01000. ALL HAZARDOUS MATERIALS SHALL BE DISPOSED OF IN ACCORDANCE WITH ALL LOCAL AND FEDERAL REQUIREMENTS.
12. CONTRACTOR SHALL SUBMIT A PROPOSED SEQUENCE OF CONSTRUCTION FOR REVIEW PRIOR TO COMMENCEMENT OF ANY WORK. SEQUENCE OF CONSTRUCTION SHALL INCLUDE IMPROVEMENTS WHILE MAINTAINING THE EXISTING CAPACITY OF THE PUMPING STATION. CLEARING AND GRUBBING, EXCAVATION SUPPORT AND PROTECTION, DEWATERING, LINE TAPPING AND STOPPING, PIPE AND VALVE SUPPORT, THRUST RESTRAINT, SITE RESTORATION, AND ALL OTHER WORK NECESSARY TO COMPLETE THE PUMPING STATION IMPROVEMENTS SHALL ALSO BE INCLUDED.
13. THE CONTRACTOR SHALL COORDINATE SEQUENCING OF MECHANICAL/ELECTRICAL EQUIPMENT AS EXISTING PUMPING CAPACITY MUST REMAIN AVAILABLE FOR THE DURATION OF THE PROJECT. REFER TO SPECIFICATION SECTION 01000 FOR PUMPING CAPACITY REQUIREMENTS.
14. THE CONTRACTOR SHALL NOT USE POWER FROM THE PUMPING STATION AT ANY TIME DURING CONSTRUCTION.
15. THE SITE SHALL BE SECURE AT ALL TIMES. THE CONTRACTOR IS RESPONSIBLE FOR PROVIDING AND MAINTAINING A SECURE FENCE AROUND THE PERIMETER OF THE WORKING SITE, WITHIN THE LIMITS OF DISTURBANCE, THROUGHOUT CONSTRUCTION.
16. NSF NOTE LANGUAGE: IN ACCORDANCE WITH CODE OF MARYLAND REGULATIONS (COMAR) 26.04.01.33, DIRECT AND INDIRECT ADDITIVES, SUPPLIERS OF WATER SHALL ONLY USE PRODUCTS (ANY MATERIALS THAT COME IN CONTACT WITH WATER INTENDED FOR USE IN PUBLIC WATER SUPPLY) THAT MEET THE APPLICABLE AMERICAN NATIONAL STANDARDS INSTITUTE / NSF INTERNATIONAL (ANSI / NSF) STANDARDS FOR DIRECT OR INDIRECT DRINKING WATER ADDITIVES. THE PRODUCTS CAN ALSO BE CERTIFIED BY AN ORGANIZATION ACCREDITED BY THE ANSI FOR SUCH TESTING (I.E., INTERNATIONAL ASSOCIATION OF PLUMBING AND MECHANICAL OFFICIALS RESEARCH AND TESTING, ONTARIO CA, UNDERWRITERS LABORATORY, NORTHBROOK IL, AND WATER QUALITY ASSOCIATION, LISLE IL).
17. LEAD-FREE MATERIAL NOTE LANGUAGE: IN COMPLIANCE WITH COMAR 09.20.01.03 AND THE SAFE DRINKING WATER ACT (SECTION 1417(a)(4)(8), MATERIALS THAT COME IN CONTACT WITH WATER INTENDED FOR USE IN PUBLIC WATER SUPPLY SHALL COMPLY WITH THE REDUCTION OF LEAD IN DRINKING WATER ACT, WHICH WENT INTO EFFECT IN MARYLAND IN JANUARY 2012.
18. DRAWING ELEVATIONS SHOWN HAVE BEEN ADJUSTED TO NAVD 88 FROM AS-BUILT PLANS ENTITLED "SPARKS FIFTH ZONE WATER PUMPING STATION" DATED 9/26/73. THE FOLLOWING ADJUSTMENTS WILL NEED TO BE USED TO CORRELATE TO AS-BUILT PLANS:
    a. PUMPING STATION SITE: (-)1.50
    b. ELEVATED STORAGE TANK SITE: (-)1.52

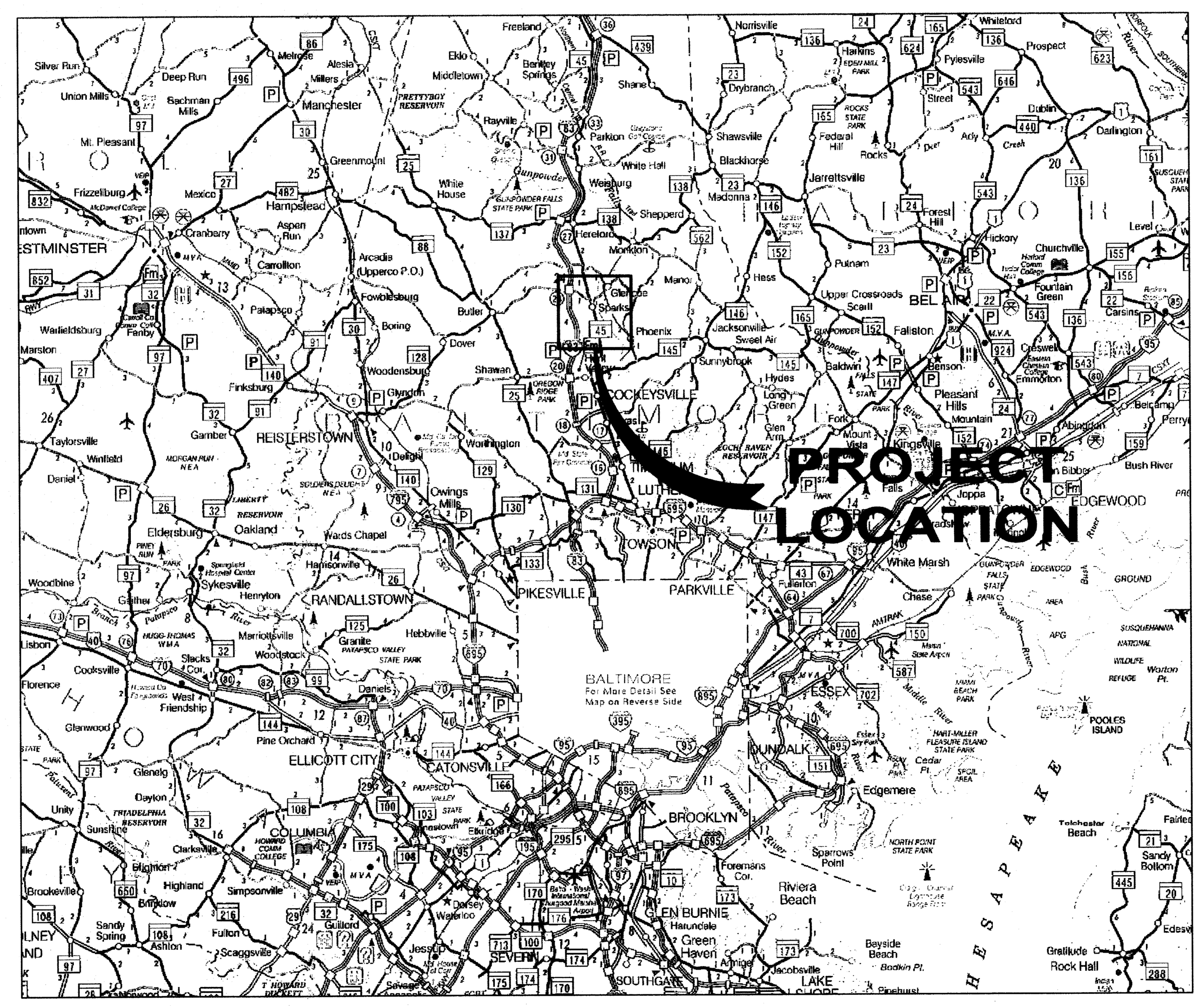

LOCATION MAP
SCALE: 1" = 6 MILES

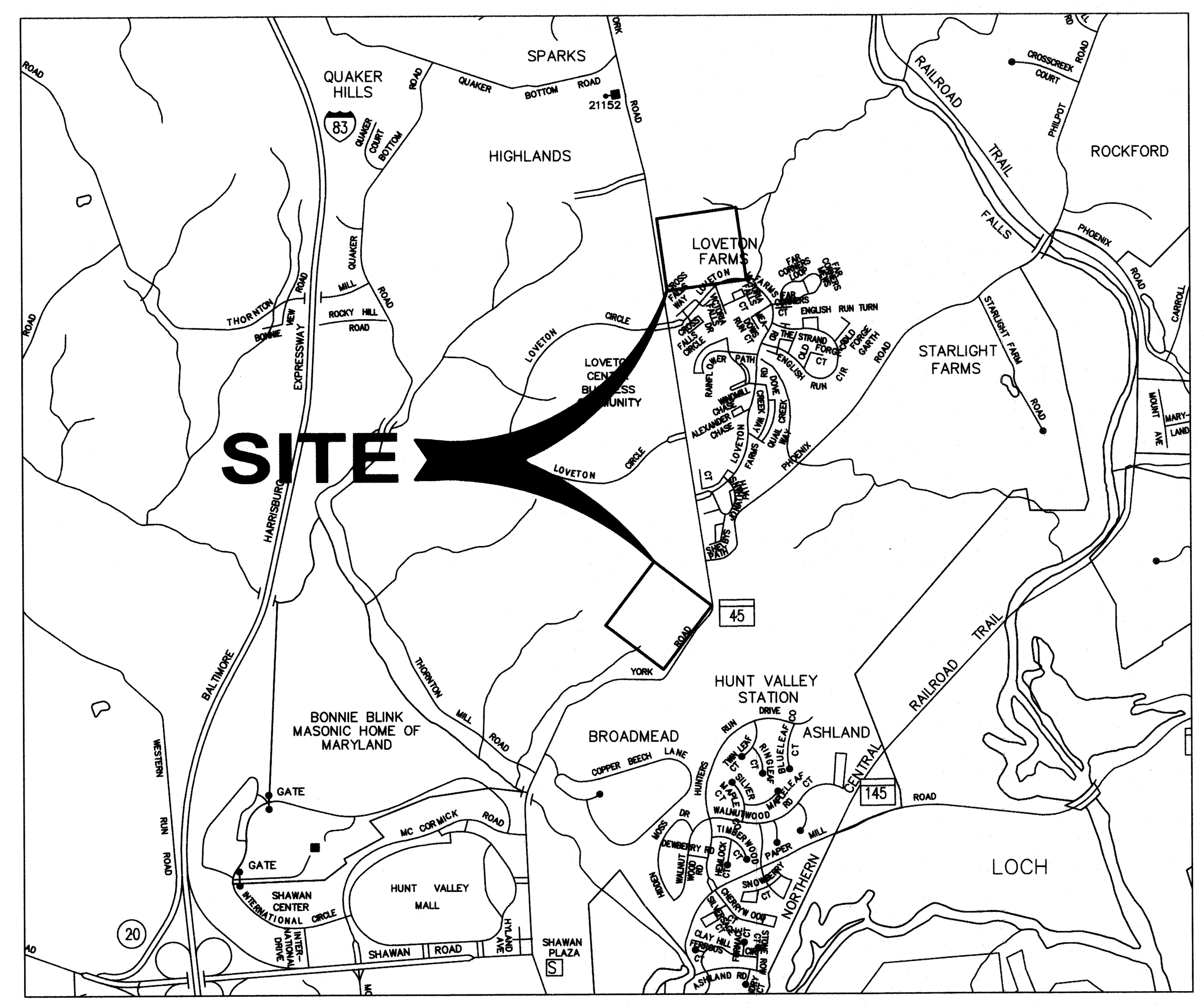

VICINITY MAP
SCALE: 1" = 1000'

SPARKS PS ADDRESS: 14010 YORK ROAD
SPARKS, MD 21152

SPARKS ELEVATED TANK ADDRESS: 14501 YORK ROAD
SPARKS, MD 21152

SHEET INDEX

SHEET NO.	BALTIMORE COUNTY DRAWING NO.	JMT DRAWING NO.	TITLE
1	2020-0428	G-1	COVER SHEET, GENERAL NOTES, AND SHEET INDEX
2	2020-0429	G-2	LEGEND, ABBREVIATIONS, AND PUMP CURVES
3	2020-0430	G-3	KEYPLAN TO IMPROVEMENTS
4	2020-0431	C-1	PUMPING STATION - DEMOLITION SITE PLAN
5	2020-0432	C-2	PUMPING STATION - NEW WORK SITE PLAN
6	2020-0433	C-3	ELEVATED TANK - DEMOLITION SITE PLAN
7	2020-0434	C-4	ELEVATED TANK - NEW WORK SITE PLAN
8	2020-0435	C-5	CIVIL DETAILS
9	2020-0436	C-6	CIVIL DETAILS
10	2020-0437	C-7	CIVIL DETAILS
11	2020-0438	C-8	PUMPING STATION - EROSION AND SEDIMENT CONTROL PLAN
12	2020-0439	C-9	ELEVATED TANK - EROSION AND SEDIMENT CONTROL PLAN
13	2020-0440	C-10	EROSION AND SEDIMENT CONTROL DETAILS
14	2020-0441	C-11	EROSION AND SEDIMENT CONTROL NOTES
15	2020-0442	C-12	EROSION AND SEDIMENT CONTROL NOTES
16	2020-0443	C-13	EROSION AND SEDIMENT CONTROL NOTES
17	2020-0444	S-1	STRUCTURAL GENERAL NOTES AND DOOR SCHEDULE
18	2020-0445	S-2	PUMPING STATION - DEMOLITION ELEVATIONS
19	2020-0446	S-3	PUMPING STATION - LOWER LEVEL DEMOLITION PLAN
20	2020-0447	S-4	PUMPING STATION - UPPER LEVEL DEMOLITION PLAN
21	2020-0448	S-5	PUMPING STATION - NEW WORK ELEVATIONS
22	2020-0449	S-6	PUMPING STATION - LOWER LEVEL NEW WORK PLAN
23	2020-0450	S-7	PUMPING STATION - UPPER LEVEL NEW WORK PLAN
24	2020-0451	S-8	PUMPING STATION - INTERIOR SCHEMATIC WALL ELEVATIONS
25	2020-0452	S-9	PUMPING STATION - STRUCTURAL DETAILS
26	2020-0453	S-10	PUMPING STATION - STRUCTURAL DETAILS
27	2020-0454	S-11	PUMPING STATION - STRUCTURAL DETAILS
28	2020-0455	S-12	PUMPING STATION - STRUCTURAL DETAILS
29	2020-0456	S-13	ELEVATED TANK VALVE VAULT - DEMOLITION AND NEW WORK PLANS
30	2020-0457	M-1	PUMPING STATION - DEMOLITION PLANS
31	2020-0458	M-2	PUMPING STATION - DEMOLITION SECTIONS
32	2020-0459	M-3	PUMPING STATION - NEW WORK PLAN AND DETAIL
33	2020-0460	M-4	PUMPING STATION - NEW WORK SECTIONS
34	2020-0461	M-5	PUMPING STATION - NEW WORK PLAN AND SECTION
35	2020-0462	M-6	PUMPING STATION - NEW WORK SECTIONS
36	2020-0463	M-7	PUMPING STATION VALVE VAULT - DEMOLITION PLAN
37	2020-0464	M-8	PUMPING STATION VALVE VAULT - NEW WORK PLAN AND DETAIL
38	2020-0465	M-9	ELEVATED TANK VALVE VAULT - DEMOLITION AND NEW WORK PLANS
39	2020-0466	M-10	MECHANICAL DETAILS
40	2020-0467	H-1	HVAC GENERAL NOTES AND SCHEDULES
41	2020-0468	H-2	PUMPING STATION AND ALTITUDE VAULT - DEMOLITION PLANS
42	2020-0469	H-3	PUMPING STATION AND ALTITUDE VAULT - NEW WORK PLANS
43	2020-0470	H-4	HVAC DETAILS AND RISER DIAGRAMS
44	2020-0471	I-1	INSTRUMENTATION NOTES, LEGEND, AND ABBREVIATIONS
45	2020-0472	I-2	PUMPING STATION - P&ID
46	2020-0473	I-3	SODIUM HYPOCHLORITE FEED SYSTEM - P&ID
47	2020-0474	I-4	PUMPING STATION - INSTRUMENTATION DEMOLITION PLAN
48	2020-0475	I-5	PUMPING STATION - INSTRUMENTATION DEMOLITION PLAN
49	2020-0476	I-6	PUMPING STATION AND TANK VALVE VAULT - INSTRUMENTATION NEW WORK PLAN
50	2020-0477	I-7	PUMPING STATION - INSTRUMENTATION NEW WORK PLAN
51	2020-0478	I-8	PUMP SYSTEM CONTROL RISER DIAGRAM AND CHLORINATION CONTROL LOOP
52	2020-0479	I-9	STATION CONTROLS AND NETWORK ARCHITECTURE
53	2020-0480	I-10	EXISTING EMERGENCY PRESSURE CONTROL PANEL WIRING DIAGRAM
54	2020-0481	I-11	TYPICAL PUMP CONTROL SCHEMATIC
55	2020-0482	I-12	TYPICAL PUMP CONTROL SCHEMATIC
56	2020-0483	I-13	INSTRUMENTATION DETAILS
57	2020-0484	I-14	INSTRUMENTATION DETAILS
58	2020-0485	I-15	INSTRUMENTATION CONDUIT AND WIRING SCHEDULES
59	2020-0486	E-1	ELECTRICAL SYMBOLS, LEGEND, ABBREVIATIONS, AND SCHEDULES
60	2020-0487	E-2	ELECTRICAL GENERAL NOTES AND PHASING NOTES
61	2020-0488	E-3	PUMPING STATION - ELECTRICAL NEW WORK SITE PLAN
62	2020-0489	E-4	PUMPING STATION - ELECTRICAL LOWER LEVEL POWER DEMOLITION PLAN
63	2020-0490	E-5	PUMPING STATION - ELECTRICAL UPPER LEVEL POWER DEMOLITION PLAN
64	2020-0491	E-6	PUMPING STATION - ELECTRICAL LIGHTING DEMOLITION PLAN
65	2020-0492	E-7	PUMPING STATION - ELECTRICAL LOWER LEVEL POWER NEW WORK PLAN
66	2020-0493	E-8	PUMPING STATION - ELECTRICAL UPPER LEVEL POWER NEW WORK PLAN
67	2020-0494	E-9	PUMPING STATION - ELECTRICAL LIGHTING NEW WORK PLAN
68	2020-0495	E-10	ELEVATED TANK - ELECTRICAL DEMOLITION AND NEW WORK PLAN
69	2020-0496	E-11	MCC ELEVATIONS AND SINGLE LINES - DEMOLITION AND NEW WORK
70	2020-0497	E-12	ELECTRICAL PANEL SCHEDULES
71	2020-0498	E-13	ELECTRICAL DETAILS

CONTRACT COMPLETION BOX

CONTRACTOR: ____
DATE COMPLETED: ____
INSPECTOR: ____
PIPE MATERIAL (Pressure Only) ____

DWG. FILENAME:

mmn

CITY OF BALTIMORE

[signature]	2/17/21	[signature]	2/17/2021	[signature]	2/18/2021
CHIEF, UTILITIES ENGINEERING SECTION	DATE	CHIEF, OFFICE OF ENGINEERING AND CONSTRUCTION	DATE	DIRECTOR, DEPT. OF PUBLIC WORKS	DATE

REVISION - CITY OF BALTIMORE

CHIEF, FACILITIES ENGINEERING SECTION — DATE

SEAL: STATE OF MARYLAND, CHATPONG OSAVAKARINT, PROFESSIONAL ENGINEER, No. 31555
DATE: 9/17/2020

PROFESSIONAL CERTIFICATION

I HEREBY CERTIFY THAT THESE DOCUMENTS WERE PREPARED OR APPROVED BY ME, AND THAT I AM A DULY LICENSED PROFESSIONAL ENGINEER UNDER THE LAWS OF THE STATE OF MARYLAND.
LICENSE NO. 31555, EXPIRATION DATE 03/15/2021.

ENGINEER: JOHNSON, MIRMIRAN & THOMPSON
40 WIGHT AVENUE
HUNT VALLEY, MD 21030
AS-BUILT PER RECORD PRINT
BY:
DATE:

DESIGN BY: DSC
DRAWN BY: GWK
CHKD BY: BCA

REVISION	BY	DATE	P.W.A. NO.	KEY SHEET	POSITION SHT
			-	V-NE DD-SE	77 NW 5,6 82 NW 5,6
			R.O.W NO.		
CONTRACT COMPLETION BOX			-		

BUREAU OF ENGINEERING AND CONSTRUCTION	HIGHWAYS	STRUCTURES	STORM DRAINS	SEWER	WATER	FIELD ENGINEER
REVIEWED BY:	RJF		[signature]	DB	MAM	RJK
DATE REVIEWED:	9/28/20		10/5/20	9/28/2020	9/24/2020	9/28/20

DRAWING SCALE
PLAN SCALE: AS SHOWN
PROFILE SCALE: N/A, N/A

DEPARTMENT OF PUBLIC WORKS
APPROVED BY: [signature] DIRECTOR
DATE: 10/14/2020

BUR. OF ENGINEERING & CONSTRUCTION
APPROVED BY: [signature] CHIEF
DATE: 10/5/2020

BALTIMORE COUNTY DEPARTMENT OF PUBLIC WORKS BUREAU OF ENGINEERING & CONSTRUCTION

SPARKS PUMPING STATION

COVER SHEET, GENERAL NOTES, AND SHEET INDEX

SPARKS WATER PUMPING STATION AND ELEVATED WATER STORAGE TANK IMPROVEMENTS

SUBDIVISION: SPARKS, MD ELECTION DIST. NO.: 8C3

SHEET DESIGNATION	CONTRACT NUMBER
G-1	20094WXO
	JOB ORDER NUMBER
	231-203-0035-0514
	SHEET 1 OF 71
	DRAWING NUMBER
	2020-0428
	FILE NO.: REV. 01/17

ABBREVIATIONS

ABDN	=	ABANDON, TO BE ABANDONED
AIT	=	ANALYTICAL INDICATOR / TRANSMITTER
AL	=	ALUMINUM
APPROX., ±	=	APPROXIMATE
BLDG	=	BUILDING
B.M.	=	BENCH MARK
℄, C/L	=	CENTERLINE
CI	=	CAST IRON
CMU	=	CONCRETE MASONRY UNIT
C/O, C.O.	=	CLEAN OUT
CONC	=	CONCRETE
CONN	=	CONNECTION
CS	=	CARBON STEEL
CU	=	COPPER
CUYD, CY	=	CUBIC YARD
D	=	DEPTH
DEG	=	DEGREE
DEMO	=	DEMOLITION
DI	=	DUCTILE IRON
DIA, ø	=	DIAMETER
DISC	=	DISCONNECT
DISCH	=	DISCHARGE
DIST	=	DISTRIBUTION
DR	=	DRAIN
DWG	=	DRAWING
EFFL	=	EFFLUENT
EL, ELEV	=	ELEVATION
ELECT./ELEC.	=	ELECTRICITY, ELECTRICAL
EX	=	EXIST, EXISTING
EXT	=	EXTERIOR
ETR	=	EXISTING TO REMAIN
EQUIV	=	EQUIVALENT
FD	=	FLOOR DRAIN
FF	=	FINISHED FLOOR
FT	=	FOOT/FEET
GAL	=	GALLON
GPM	=	GALLONS PER MINUTE
H	=	HEIGHT
HI	=	HYDRAULIC INSTITUTE
HP	=	HORSEPOWER
HVAC	=	HEATING, VENTILATION, AND AIR CONDITIONING
HW	=	HOT WATER (POTABLE)
HWL	=	HIGH WATER LEVEL
INFL	=	INFLUENT
INV	=	INVERT
ID	=	INSIDE DIAMETER
LE	=	LEVEL ELEMENT
LF	=	LINEAR FEET
LG	=	LONG
LP	=	LIGHT PANEL
LWS	=	LOW WATER SURFACE
M	=	MOTOR
MAX	=	MAXIMUM
MCC	=	MOTOR CONTROL CENTER
MECH	=	MECHANICAL
MIN	=	MINIMUM
MJ	=	MECHANICAL JOINT
MWS	=	MAXIMUM WATER SURFACE
N/A	=	NOT APPLICABLE
NC	=	NORMALLY CLOSED
NO/NO./NOS.	=	NORMALLY OPEN/NUMBER/NUMBER(S)
NWS	=	NORMAL WATER SURFACE
P&ID	=	PROCESS AND INSTRUMENTATION DIAGRAM
PI	=	PRESSURE INDICATOR
PROP.	=	PROPOSED
PRV	=	PRESSURE REDUCING VALVE
PS	=	PRESSURE SWITCH
PT	=	PRESSURE TRANSMITTER
PVC	=	POLYVINYL CHLORIDE
RCP	=	REINFORCED CONCRETE PIPE
RED	=	REDUCED, REDUCING, REDUCER
SCH	=	SCHEDULE
SD	=	STORM DRAIN
SQFT	=	SQUARE FEET
SS	=	STAINLESS STEEL / SANITARY SEWER
SSFM	=	SANITARY SEWER FORCE MAIN
SHT	=	SHEET
SPEC	=	SPECIFICATION
STA	=	STATION
T	=	THICKNESS
T&G	=	TONGUE AND GROOVE
TOW	=	TOP OF WALL
TYP	=	TYPICAL
UH	=	UNIT HEATER
UNK	=	UNKNOWN
UW	=	UTILITY WATER
V, VLV	=	VALVE
VCP	=	VITRIFIED CLAY PIPE
VFD	=	VARIABLE FREQUENCY DRIVE
W	=	WIDTH
W/	=	WITH
WM	=	WATER METER

LEGEND

	FIRE / YARD HYDRANT
	EXISTING WATER VALVE
WM	EXISTING WATER METER
	GATE VALVE / VALVE BOX
	SPIGGOT
	POINT OF DEMOLITION / CONNECT TO EXISTING
	POINT OF CONNECTION
100	EXISTING GRADE CONTOUR
100	PROPOSED GRADE CONTOUR
x 100.0	PROPOSED GRADE SPOT ELEVATION
X X	EXISTING CHAIN LINK FENCE
E	ELECTRIC MANHOLE
S	SANITARY SEWER MANHOLE
	VERTICAL CONTROL POINT – BENCH MARK
	HORIZONTAL CONTROL POINT
//	ABANDONED UTILITY MAIN
GAS	GAS MAIN
W	WATER MAIN
TEL	TELEPHONE CONDUIT
E	ELECTRIC CONDUIT
PW	POTABLE WATER MAIN
D	DRAIN PIPE
UW	UTILITY WATER MAIN
	PLUG VALVE
	CHECK VALVE
	WATER LEVEL
	HOSE BIB
	BALL VALVE
	AIR RELEASE VALVE
	GLOBE VALVE

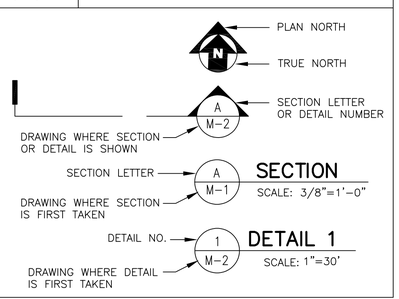

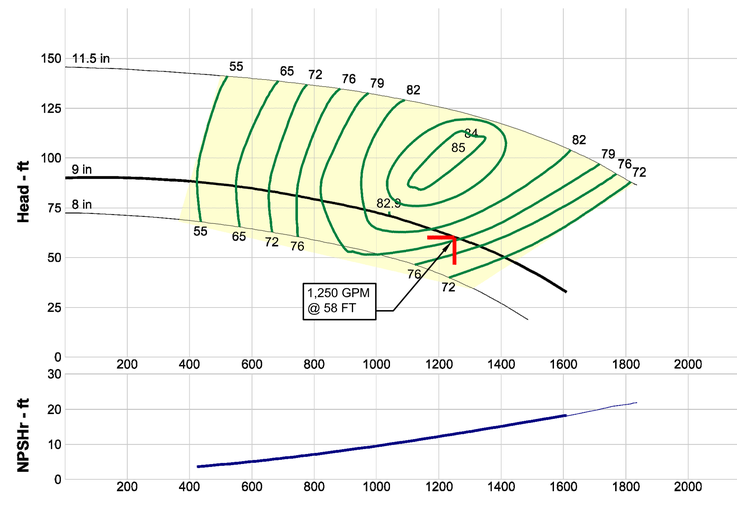

PUMP A AND B CURVE

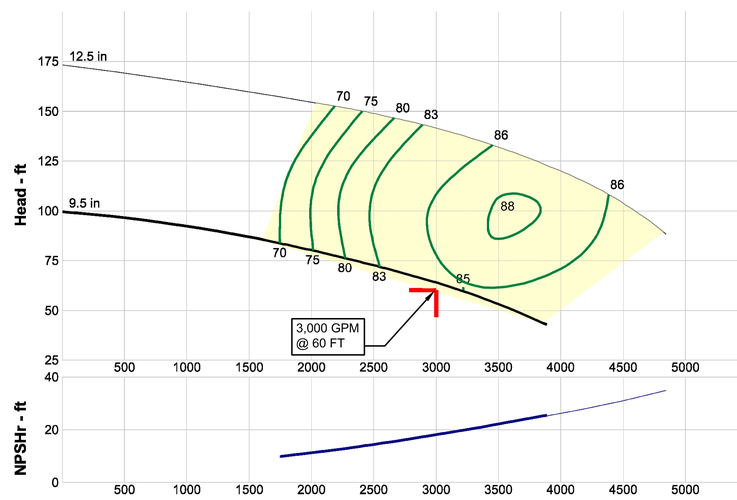

PUMP C CURVE

NOTE: REFER TO SPECIFICATION 11310 FOR PUMP REQUIREMENTS.

NORMAL OPERATING PRESSURE	100 PSI
TEST PRESSURE	150 PSI
WATER PLAT	3Z22
TANK PLAT	3Y22
ZONE	SPARKS 5TH ZONE

CONTRACT COMPLETION BOX

CONTRACTOR:
DATE COMPLETED:
INSPECTOR:
PIPE MATERIAL (Pressure Only)

DWG. FILENAME:

CITY OF BALTIMORE	REVISION – CITY OF BALTIMORE
CHIEF, OFFICE OF ENGINEERING AND CONSTRUCTION — DATE	CHIEF, FACILITIES ENGINEERING SECTION — DATE

SEAL: STATE OF MARYLAND — CHARLES W. SCHMIDT — No. 31555 — PROFESSIONAL ENGINEER

DATE : 9/17/2020

PROFESSIONAL CERTIFICATION

I HEREBY CERTIFY THAT THESE DOCUMENTS WERE PREPARED OR APPROVED BY ME, AND THAT I AM A DULY LICENSED PROFESSIONAL ENGINEER UNDER THE LAWS OF THE STATE OF MARYLAND.

LICENSE NO. 31555, EXPIRATION DATE 03/15/2021

ENGINEER: JOHNSON, MIRMIRAN & THOMPSON
40 WIGHT AVENUE
HUNT VALLEY, MD 21030

AS-BUILT PER RECORD PRINT
BY:
DATE:

DESIGN BY: DSC
DRAWN BY: GWK
CHKD BY: BCA

REVISION	BY	DATE

CONTRACT COMPLETION BOX

BUREAU OF ENGINEERING AND CONSTRUCTION	HIGHWAYS	STRUCTURES	STORM DRAINS	SEWER	WATER	FIELD ENGINEER	BUR. OF ENGINEERING & CONSTRUCTION
SEE DRAWING 2020-0428 FOR ORIGINAL SIGNATURES							

P.W.A. NO.	KEY SHEET	POSITION SHT
–	V-NE DD-SE	77 NW 5,6 82 NW 5,6
R.O.W NO.		
–		

DRAWING SCALE	
PLAN SCALE:	AS SHOWN
PROFILE SCALE:	N/A
	N/A

DEPARTMENT OF PUBLIC WORKS

SEE DRAWING 2020-0428 FOR ORIGINAL SIGNATURES

BALTIMORE COUNTY DEPARTMENT OF PUBLIC WORKS BUREAU OF ENGINEERING & CONSTRUCTION

SPARKS PUMPING STATION

LEGEND, ABBREVIATIONS, AND PUMP CURVES

SPARKS WATER PUMPING STATION AND ELEVATED WATER STORAGE TANK IMPROVEMENTS

SUBDIVISION: SPARKS, MD ELECTION DIST. NO.: 8C3

SHEET DESIGNATION	CONTRACT NUMBER
G-2	20094WXO
JOB ORDER NUMBER	
231-203-0035-0514	
SHEET 2 OF 71	
DRAWING NUMBER	
2020-0429	
FILE NO.:	REV. 8/17/

BALTIMORE COUNTY MARYLAND

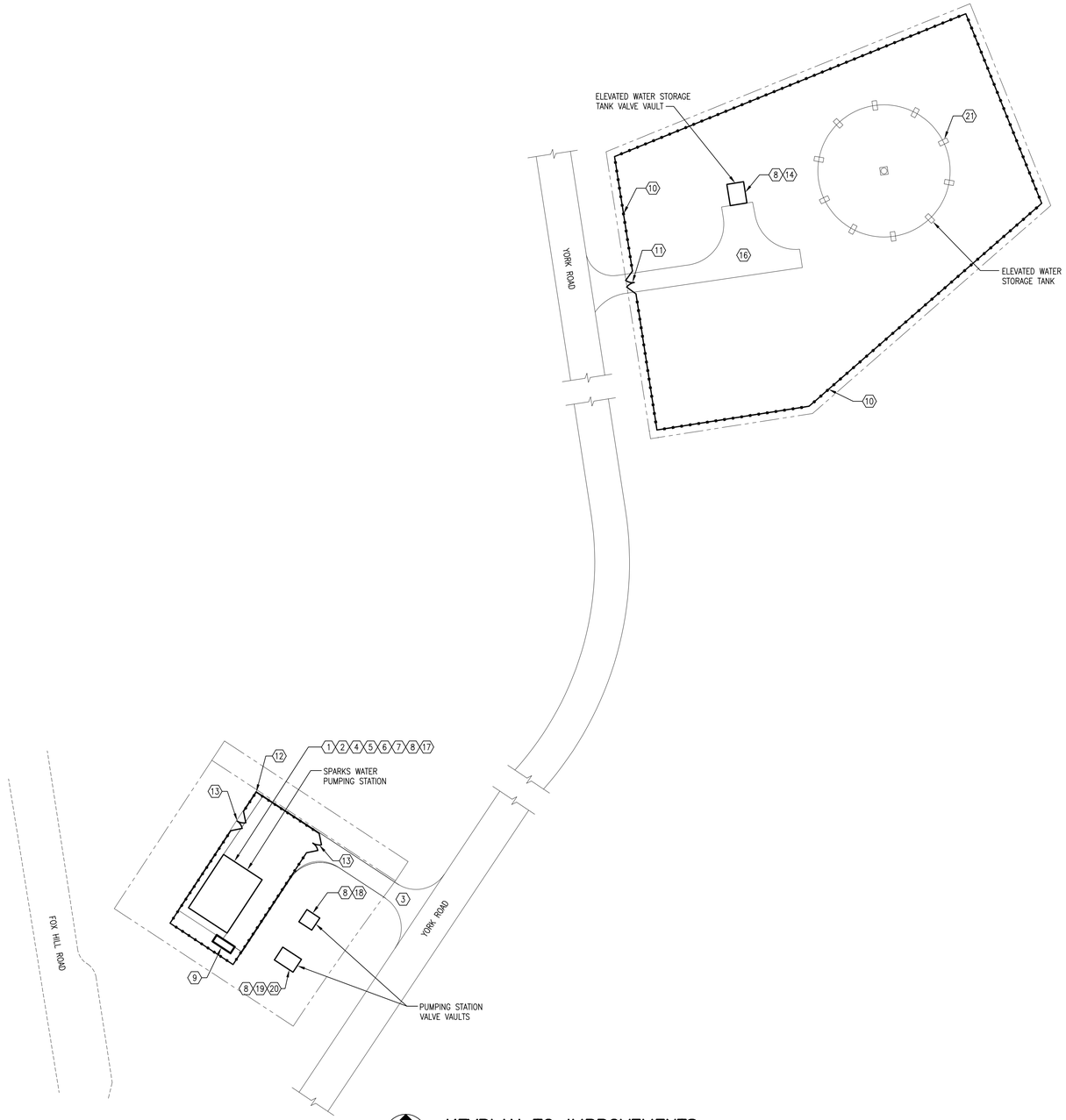

KEYPLAN TO IMPROVEMENTS

SCALE: NOT TO SCALE

GENERAL NOTES:

1. CONTRACTOR SHALL COORDINATE WITH THE CITY AT LEAST 7 DAYS BEFORE START OF DEMOLITION ACTIVITIES FOR CITY TO TAG ITEMS TO BE SALVAGED.
2. CONTRACTOR SHALL PROTECT EXISTING LANDSCAPING DURING CONSTRUCTION.
3. KEYPLAN TO IMPROVEMENTS IS NOT INTENDED TO IDENTIFY ALL REQUIRED COMPONENTS OF THE WORK, BUT HIGHLIGHT THE MAJOR ITEMS. REFER TO CONTRACT DOCUMENTS FOR DETAILS OF SPECIFIC WORK.

SHEET KEYNOTES:

1. UPGRADE EXISTING PUMPS: WORK IN THIS AREA WILL INCLUDE DEMOLITION OF EXISTING PUMP A, B, AND C, PIPING, VALVES, AND APPURTENANCES AND REPLACE WITH NEW PIPING, PUMP, AND VALVE SYSTEMS.
2. ROOF REPLACEMENT: REMOVE EXISTING SLATE ROOF SHINGLES AND ROOFING MATERIALS AND REPLACE WITH ASPHALT ROOFING SYSTEM.
3. REMOVE EXISTING ASPHALT PAVING. REPLACE IN KIND. REMOVE EXISTING BRUSH FROM BUILDING AND LOT.
4. REMOVE AND REPLACE EXISTING LOUVERS, UNIT HEATERS, AND EXHAUST FANS. REMOVE AND REPLACE EXISTING SINK, TOILET, AND ASSOCIATED FIXTURES IN THE BATHROOM.
5. REMOVE AND REPLACE EXISTING HANDRAIL AND GUARDRAILS.
6. REMOVE AND REPLACE EXISTING MOTOR CONTROL CENTER INCLUDING CHART RECORDERS, CONTROL PANELS, BGE FEEDERS, PANEL BOARDS, AND TRANSFORMERS.
7. REPAIR CRACKS IN CMU WALLS AND EXTERIOR BRICK WORK. REMOVE AND REPLACE ALL DOORS AND DOOR FRAMES. INSTALL GUTTERS ON BOTH SIDES OF GABLED ROOF WITH DOWNSPOUTS AND SPLASH BLOCKS. PROVIDE CONCRETE ENTRY STAIRS AT ALL EXTERIOR DOORS OF PUMPING STATION.
8. INSPECT AND CLEAN FLOOR AND VAULT DRAINS. REMOVE AND REPLACE ALL DRAIN GRATING.
9. GENERATOR: INSTALL NEW EMERGENCY GENERATOR AND GENERATOR PAD.
10. TANK SITE FENCE REPLACEMENT: REMOVE EXISTING BRUSH FROM FENCE. REMOVE EXISTING FENCE AND REPLACE FENCE IN KIND. REFER TO SPECIFICATION 02821.
11. TANK SITE GATE REPLACEMENT: REMOVE AND REPLACE EXISTING GATE. PROVIDE NEW GATE. REFER TO SPECIFICATION 02821.
12. PUMPING STATION FENCE REPLACEMENT: REMOVE EXISTING BRUSH FROM FENCE. REMOVE EXISTING FENCE AND REPLACE. REFER TO SPECIFICATION 02821.
13. PUMPING STATION GATE REPLACEMENT: REMOVE AND REPLACE EXISTING GATE. PROVIDE NEW GATE AT REAR FENCE. REFER TO SPECIFICATION 02821.
14. DEMOLISH AND REPLACE EXISTING ALTITUDE VALVE, SWING CHECK VALVE, UNIT HEATER, AND ISOLATION GATE VALVES IN KIND.
15. REHABILITATE EXISTING ELEVATED WATER STORAGE TANK IN ACCORDANCE WITH SPECIFICATION 13200.
16. PAVE EXISTING ELEVATED WATER STORAGE TANK GRAVEL ACCESS DRIVE.
17. DEMOLISH AND REPLACE EXISTING GAS CHLORINATION DOSING, SAMPLING, AND STORAGE SYSTEM WITH NEW SODIUM HYPOCHLORITE CHLORINATION SYSTEM.
18. REMOVE AND REPLACE EXISTING DISCHARGE PRESSURE RELIEF VALVES WITH NEW PRESSURE RELIEF VALVES.
19. REMOVE AND REPLACE EXISTING SUCTION PRESSURE RELIEF VALVES WITH NEW PRESSURE RELIEF VALVES.
20. REMOVE EXISTING CHLORINE DOSING PIPING, VALVES, AND CONNECTIONS FOR NEW SODIUM HYPOCHLORITE SYSTEM TO AND WITHIN VAULT. PROVIDE NEW SODIUM HYPO DOSING IN VAULT.
21. PROVIDE SUBMERSIBLE MIXER IN ACCORDANCE WITH SPECIFICATION 11220.

CITY OF BALTIMORE	REVISION – CITY OF BALTIMORE
CHIEF, OFFICE OF ENGINEERING AND CONSTRUCTION — DATE	CHIEF, FACILITIES ENGINEERING SECTION — DATE

SEAL: STATE OF MARYLAND — CHRISTOPHER S. KARWAN — No. 31555 — PROFESSIONAL ENGINEER

DATE : 9/17/2020

PROFESSIONAL CERTIFICATION

I HEREBY CERTIFY THAT THESE DOCUMENTS WERE PREPARED OR APPROVED BY ME, AND THAT I AM A DULY LICENSED PROFESSIONAL ENGINEER UNDER THE LAWS OF THE STATE OF MARYLAND.
LICENSE NO. 31555 EXPIRATION DATE 03/15/2021

ENGINEER: JOHNSON, MIRMIRAN & THOMPSON
40 WIGHT AVENUE
HUNT VALLEY, MD 21030

AS-BUILT PER RECORD PRINT
BY:
DATE:

DESIGN BY: DSC
DRAWN BY: GWK
CHKD BY: BCA

REVISION	BY	DATE
CONTRACT COMPLETION BOX		

P.W.A. NO.	KEY SHEET	POSITION SHT
–	V-NE DD-SE	77 NW 5,6 82 NW 5,6
R.O.W NO.		
–		

DRAWING SCALE	
PLAN SCALE:	AS SHOWN
PROFILE SCALE:	N/A
	N/A

DEPARTMENT OF PUBLIC WORKS: SEE DRAWING 2020-0428 FOR ORIGINAL SIGNATURES

BUREAU OF ENGINEERING AND CONSTRUCTION	HIGHWAYS	STRUCTURES	STORM DRAINS	SEWER	WATER	FIELD ENGINEER	BUR. OF ENGINEERING & CONSTRUCTION
SEE DRAWING 2020-0428 FOR original SIGNATURES							

BALTIMORE COUNTY DEPARTMENT OF PUBLIC WORKS BUREAU OF ENGINEERING & CONSTRUCTION

SPARKS PUMPING STATION

KEYPLAN TO IMPROVEMENTS

SPARKS WATER PUMPING STATION AND ELEVATED WATER STORAGE TANK IMPROVEMENTS

SUBDIVISION: SPARKS, MD ELECTION DIST. NO.: 8C3

CONTRACT COMPLETION BOX

CONTRACTOR: _____
DATE COMPLETED: _____
INSPECTOR: _____
PIPE MATERIAL (Pressure Only) _____

DWG. FILENAME:

SHEET DESIGNATION	CONTRACT NUMBER
G-3	20094WXO
JOB ORDER NUMBER	231-203-0035-0514
SHEET 3 OF 71	
DRAWING NUMBER	2020-0430
FILE NO.:	REV. 4/17

BALTIMORE COUNTY MARYLAND

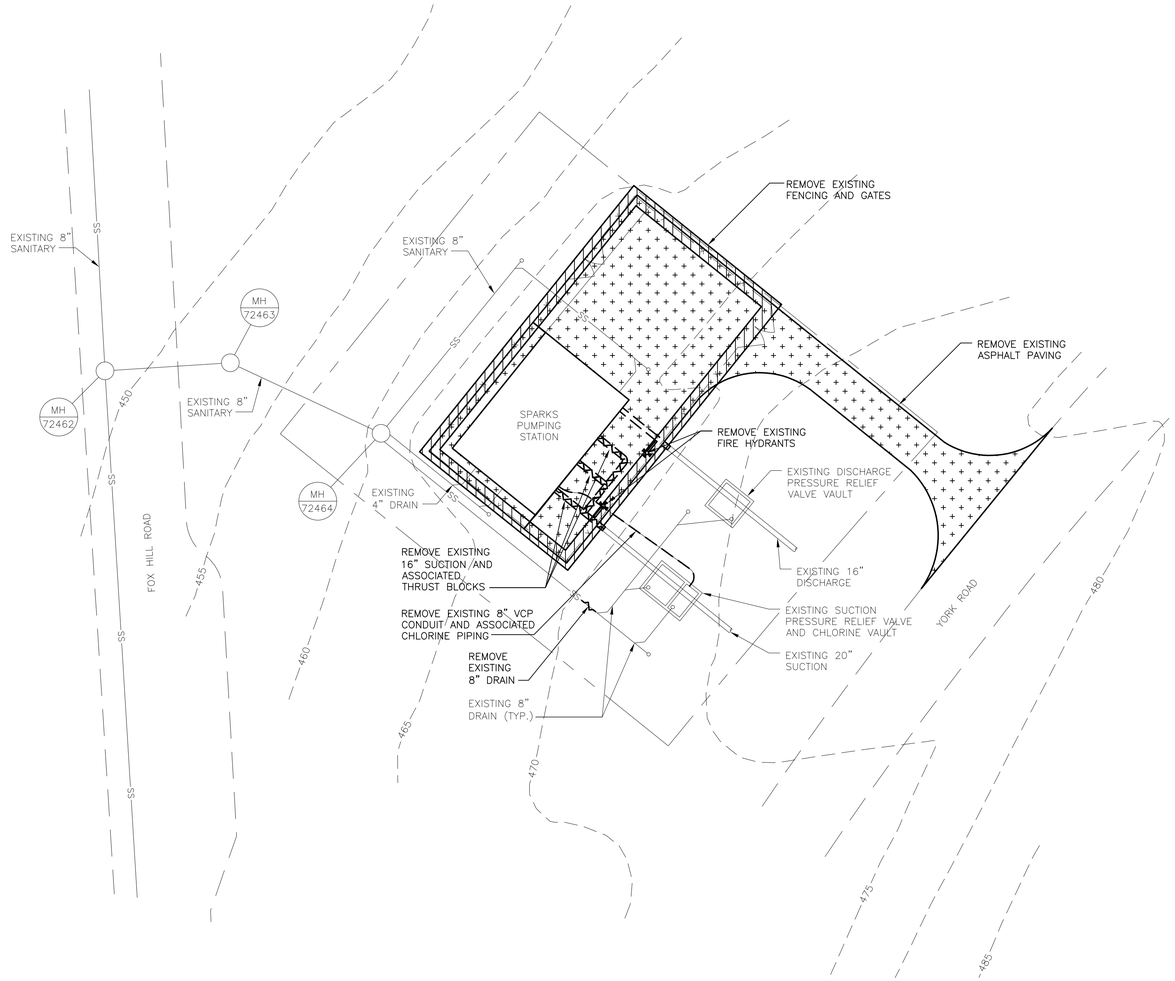

PUMPING STATION – DEMOLITION SITE PLAN

SCALE: 1" = 20'

GENERAL SHEET NOTES:

1. EXISTING UNDERGROUND UTILITIES SHOWN ON THE PLANS ARE BASED ON THE BEST AVAILABLE INFORMATION AND ARE SHOWN FOR THE CONVENIENCE OF THE CONTRACTOR ONLY. NO GUARANTEE IS MADE OR IMPLIED REGARDING THE ACCURACY OR COMPLETENESS THEREOF. THE CONTRACTOR IS RESPONSIBLE FOR THE VERIFICATION OF DEPTH, SIZE AND MATERIAL, AND LOCATION OF ALL UNDERGROUND UTILITIES TO HIS OWN SATISFACTION BEFORE BEGINNING ANY EXCAVATION OR UTILITY INSTALLATION. THE OWNER AND ENGINEER DISCLAIM ANY RESPONSIBILITY FOR THE ACCURACY OR COMPLETENESS OF SAID INFORMATION. IF THE CONTRACTOR RELIES ON SAID INFORMATION, HE DOES SO AT HIS OWN RISK. THE PROVISION OF INFORMATION ON THE PLANS DOES NOT RELIEVE THE CONTRACTOR OF HIS OBLIGATION TO SUPPORT AND PROTECT ALL EXISTING UTILITIES AND APPURTENANCES SHOWN OR NOT SHOWN. SHOULD ANY EXISTING UTILITY BE DAMAGED BY THE CONTRACTOR, THE CONTRACTOR SHALL REPAIR THE DAMAGE CAUSED TO THE UTILITY OWNER'S SATISFACTION, AT THE CONTRACTOR'S EXPENSE.
2. INSPECT AND CLEAN EXISTING VAULT DRAINS. DRAIN GRATING TO BE REPLACED UPON COMPLETION OF DRAIN CLEANING.
3. REMOVE VEGETATION ON EXISTING FENCE, PARKING LOT, AND BUILDING. REMOVE DEAD TREES AND STUMPS ON THE PROPERTY AND TRIM EXISTING TREES.
4. CONTRACTOR IS RESPONSIBLE FOR COORDINATING WITH BALTIMORE COUNTY TO OBTAIN MDSHA PERMIT FOR WORKING IN RIGHT OF WAY.

LEGEND

- EXISTING BUILDING
- EXISTING CONTOUR
- EXISTING OVERHEAD ELECTRIC
- EXISTING UNDERGROUND ELECTRIC
- EXISTING ELECTRIC MANHOLE
- EXISTING FENCELINE
- EXISTING FIRE HYDRANT
- EXISTING GAS
- EXISTING GAS VALVE
- EXISTING PROPERTY LINE
- EXISTING PAVING
- EXISTING SANITARY
- EXISTING STREET LIGHT
- EXISTING STORMDRAIN
- EXISTING STORMDRAIN MANHOLE
- EXISTING TELEPHONE
- EXISTING UTILITY POLE
- EXISTING WATERLINE
- EXISTING WATER METER
- EXISTING WATER VALVE
- REMOVE/DEMOLITION
- REMOVE ASPHALT PAVING TO AGGREGATE BASE ONLY
- REMOVE UTILITY PIPE

CONTRACT COMPLETION BOX
CONTRACTOR:
DATE COMPLETED:
INSPECTOR:
PIPE MATERIAL (Pressure Only)
DWG. FILENAME:

SCALE: 1"= 20'-0"

CITY OF BALTIMORE	REVISION – CITY OF BALTIMORE
CHIEF, OFFICE OF ENGINEERING AND CONSTRUCTION DATE	CHIEF, FACILITIES ENGINEERING SECTION DATE

SEAL: STATE OF MARYLAND – JUDITH A. CARROLL – No. 14446 – PROFESSIONAL ENGINEER

DATE : 9/17/2020

PROFESSIONAL CERTIFICATION

I HEREBY CERTIFY THAT THESE DOCUMENTS WERE PREPARED OR APPROVED BY ME, AND THAT I AM A DULY LICENSED PROFESSIONAL ENGINEER UNDER THE LAWS OF THE STATE OF MARYLAND. LICENSE NO. 14446 EXPIRATION DATE 05/25/2021

ENGINEER: CARROLL ENGINEERING
215 SCHILLING CIR. SUITE 102
HUNT VALLEY, MD 21031

AS-BUILT PER RECORD PRINT
BY:
DATE:

DESIGN BY: GHT
DRAWN BY: GHT
CHKD BY: CMS

REVISION	BY	DATE
CONTRACT COMPLETION BOX		

P.W.A. NO.	KEY SHEET	POSITION SHT
–	V-NE	77 NW 5,6
R.O.W NO.		
–		

DRAWING SCALE: PLAN SCALE: AS SHOWN; PROFILE SCALE: N/A; N/A

DEPARTMENT OF PUBLIC WORKS: SEE DRAWING 2020-0428 FOR ORIGINAL SIGNATURES

BUREAU OF ENGINEERING AND CONSTRUCTION	HIGHWAYS	STRUCTURES	STORM DRAINS	SEWER	WATER	FIELD ENGINEER	BUR. OF ENGINEERING & CONSTRUCTION
SEE DRAWING 2020-0428 FOR ORIGINAL SIGNATURES							

BALTIMORE COUNTY DEPARTMENT OF PUBLIC WORKS BUREAU OF ENGINEERING & CONSTRUCTION

SPARKS PUMPING STATION

PUMPING STATION – DEMOLITION SITE PLAN

SPARKS WATER PUMPING STATION AND ELEVATED WATER STORAGE TANK IMPROVEMENTS

SUBDIVISION: SPARKS, MD ELECTION DIST. NO.: 8C3

SHEET DESIGNATION	CONTRACT NUMBER
C-1	20094WX0
JOB ORDER NUMBER	
231-203-0035-0514	
SHEET 4 OF 71	
DRAWING NUMBER	
2020-0431	
FILE NO.:	REV. 4/97

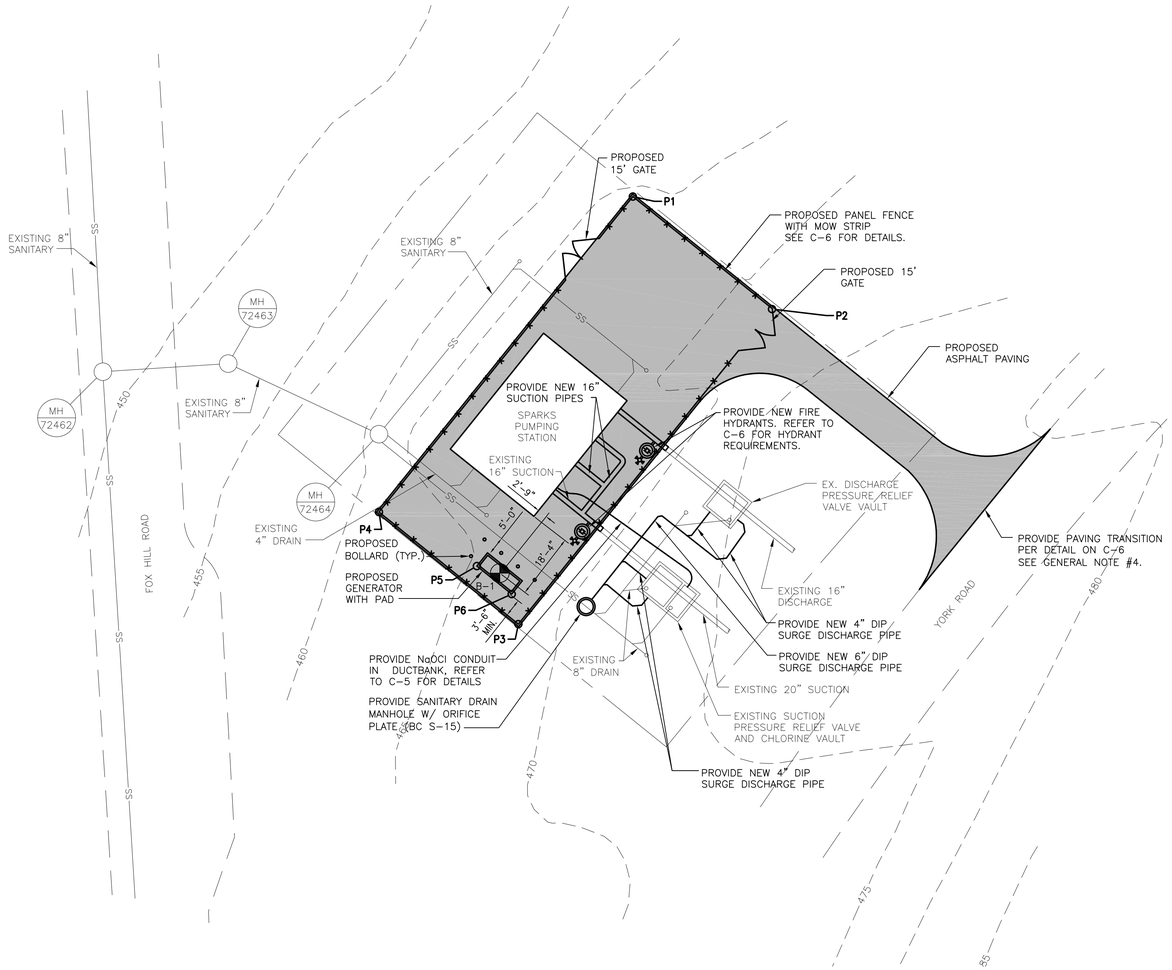

PUMPING STATION – NEW WORK SITE PLAN

SCALE: 1" = 20'

GENERAL SHEET NOTES:

1. EXISTING UNDERGROUND UTILITIES SHOWN ON THE PLANS ARE BASED ON THE BEST AVAILABLE INFORMATION AND ARE SHOWN FOR THE CONVENIENCE OF THE CONTRACTOR ONLY. NO GUARANTEE IS MADE OR IMPLIED REGARDING THE ACCURACY OR COMPLETENESS THEREOF. THE CONTRACTOR IS RESPONSIBLE FOR THE VERIFICATION OF DEPTH, SIZE AND MATERIAL, AND LOCATION OF ALL UNDERGROUND UTILITIES TO HIS OWN SATISFACTION BEFORE BEGINNING ANY EXCAVATION OR UTILITY INSTALLATION. THE OWNER AND ENGINEER DISCLAIM ANY RESPONSIBILITY FOR THE ACCURACY OR COMPLETENESS OF SAID INFORMATION. IF THE CONTRACTOR RELIES ON SAID INFORMATION, HE DOES SO AT HIS OWN RISK. THE PROVISION OF INFORMATION ON THE PLANS DOES NOT RELIEVE THE CONTRACTOR OF HIS OBLIGATION TO SUPPORT AND PROTECT ALL EXISTING UTILITIES AND APPURTENANCES SHOWN OR NOT SHOWN. SHOULD ANY EXISTING UTILITY BE DAMAGED BY THE CONTRACTOR, THE CONTRACTOR SHALL REPAIR THE DAMAGE CAUSED TO THE UTILITY OWNER'S SATISFACTION, AT THE CONTRACTOR'S EXPENSE.
2. INSPECT AND CLEAN EXISTING VAULT DRAINS. DRAIN GRATING TO BE REPLACED UPON COMPLETION OF DRAIN CLEANING.
3. REMOVE VEGETATION ON EXISTING FENCE, PARKING LOT, AND BUILDING. REMOVE DEAD TREES AND STUMPS ON THE PROPERTY AND TRIM EXISTING TREES.
4. CONTRACTOR IS RESPONSIBLE FOR COORDINATING WITH BALTIMORE COUNTY TO OBTAIN MDSHA PERMIT FOR WORKING IN RIGHT OF WAY.
5. ALL PIPING TO BE RESTRAINED.
6. GENERATOR PAD COORDINATES ARE INTENDED TO PROVIDE GENERAL LOCATION AND ORIENTATION. CONTRACTOR IS RESPONSIBLE FOR COORDINATING PAD SIZE WITH PROVIDED EQUIPMENT.

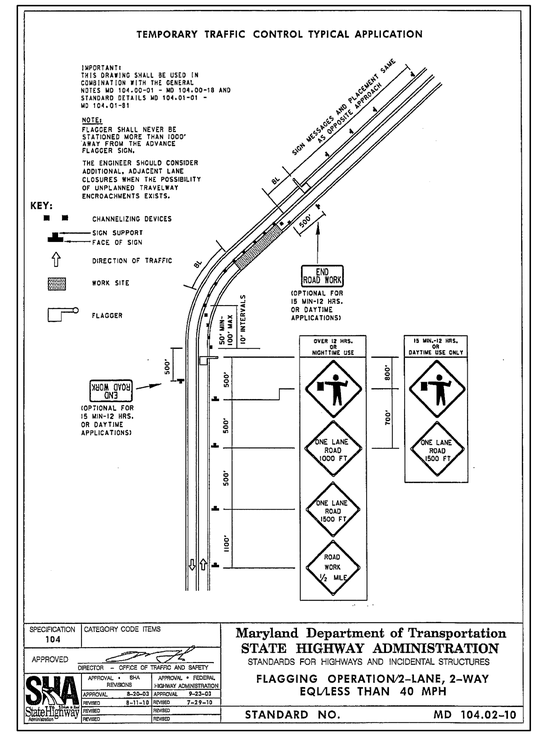

LEGEND

- EXISTING BUILDING
- EXISTING CONTOUR
- EXISTING OVERHEAD ELECTRIC
- EXISTING UNDERGROUND ELECTRIC
- EXISTING ELECTRIC MANHOLE
- EXISTING FENCELINE
- EXISTING FIRE HYDRANT
- EXISTING GAS
- EXISTING GAS VALVE
- EXISTING PROPERTY LINE
- EXISTING PAVING
- EXISTING SANITARY
- EXISTING STREET LIGHT
- EXISTING STORMDRAIN
- EXISTING STORMDRAIN MANHOLE
- EXISTING TELEPHONE
- EXISTING UTILITY POLE
- EXISTING WATERLINE
- EXISTING WATER METER
- EXISTING WATER VALVE
- PROPOSED WORK
- PROPOSED ASPHALT PAVING
- PROPOSED STORMDRAIN MANHOLE
- PROPOSED FENCELINE

FENCE COORDINATES		
NUMBER	NORTHING	EASTING
P1	670,986.53	1,413,178.61
P2	670,917.41	1,413,219.25
P3	670,825.41	1,413,153.31
P4	670,854.54	1,413,112.67
P5	670,842.10	1,413,139.69
P6	670,834.27	1,413,149.43

MAINTENANCE OF TRAFFIC NOTES:

1. NO WORK IS TO BEGIN UNTIL ADVANCED WARNING SIGNS, DRUMS, CHANNELIZED DEVICES AND BARRIERS ARE IN PLACE AND OPERATIONAL.
2. THE CONTRACTOR SHALL LIMIT THEIR WORKING HOURS FROM MONDAY – FRIDAY 9:30 AM – 3:30 PM. ALL LANE CLOSURES, DETOURS AND LANE SHIFTS SHALL BE REMOVED FROM THE ROADWAYS SO ALL EXISTING LANES SHALL BE OPEN AND FULLY OPERATIONAL BY 3:30 PM.
3. THE CONTRACTOR SHALL UTILIZE A ONE LANE FLAGGING OPERATION AS SPECIFIED ON MD STANDARD 104.02-10 FOR TRAFFIC CONTROL. SEE DETAIL ON THIS PLAN SHEET.
4. THE CONTRACTOR SHALL HAVE ALL OPEN TRENCHES EITHER BACK-FILLED OR STEEL PLATED BY THE END OF THE WORKING DAY SO ALL EXISTING ROADWAYS ARE FULLY OPERATIONAL.
5. THE CONTRACTOR SHALL MAINTAIN ACCESS TO ALL EXITING RESIDENTIAL AND BUSINESS DRIVEWAYS THROUGHOUT THE CONSTRUCTION DURATION.
6. DURING NON-CONSTRUCTION TIMES, ALL TEMPORARY WARNING SIGNS NOT APPLICABLE OR NEEDED, SHALL BE EITHER COVERED OR TURNED AWAY FROM TRAFFIC.
7. AT THE COMPLETION OF ALL ROAD WORK, THE CONTRACTOR SHALL REMOVE ALL TEMPORARY WARNING SIGNS, DRUMS AND BARRIERS.

10' 0 10' 20'
SCALE: 1"= 20'-0"

CITY OF BALTIMORE	REVISION – CITY OF BALTIMORE
CHIEF, OFFICE OF ENGINEERING AND CONSTRUCTION — DATE	CHIEF, FACILITIES ENGINEERING SECTION — DATE

SEAL: STATE OF MARYLAND – JOSEPH A. CARROLL JR. – No. 14446 – PROFESSIONAL ENGINEER

DATE : 9/17/2020

PROFESSIONAL CERTIFICATION

I HEREBY CERTIFY THAT THESE DOCUMENTS WERE PREPARED OR APPROVED BY ME, AND THAT I AM A DULY LICENSED PROFESSIONAL ENGINEER UNDER THE LAWS OF THE STATE OF MARYLAND.

LICENSE NO. 14446, EXPIRATION DATE 05/25/2021.

ENGINEER: CARROLL ENGINEERING
215 SCHILLING CIR. SUITE 102
HUNT VALLEY, MD 21031

AS-BUILT PER RECORD PRINT

BY:
DATE:

DESIGN BY: GHT
DRAWN BY: GHT
CHKD BY: CMS

REVISION	BY	DATE
CONTRACT COMPLETION BOX		

P.W.A. NO.	KEY SHEET	POSITION SHT
–	V-NE	77 NW 5,6
R.O.W NO. –		

DRAWING SCALE	
PLAN SCALE:	AS SHOWN
PROFILE SCALE:	N/A / N/A

DEPARTMENT OF PUBLIC WORKS

SEE DRAWING 2020-0428 FOR ORIGINAL SIGNATURES

BUREAU OF ENGINEERING AND CONSTRUCTION	HIGHWAYS	STRUCTURES	STORM DRAINS	SEWER	WATER	FIELD ENGINEER	BUR. OF ENGINEERING & CONSTRUCTION
SEE DRAWING 2020-0428 FOR ORIGINAL SIGNATURES							

BALTIMORE COUNTY DEPARTMENT OF PUBLIC WORKS BUREAU OF ENGINEERING & CONSTRUCTION

SPARKS PUMPING STATION

PUMPING STATION – NEW WORK SITE PLAN

SPARKS WATER PUMPING STATION AND ELEVATED WATER STORAGE TANK IMPROVEMENTS

SUBDIVISION: SPARKS, MD ELECTION DIST. NO.: 8C3

CONTRACT COMPLETION BOX
CONTRACTOR:
DATE COMPLETED:
INSPECTOR:
PIPE MATERIAL (Pressure Only)

DWG. FILENAME:

SHEET DESIGNATION	CONTRACT NUMBER
C-2	20094WXO
JOB ORDER NUMBER	231-203-0035-0514
SHEET 5 OF 71	DRAWING NUMBER
2020-0432	
FILE NO.:	REV. 05/09

BALTIMORE COUNTY MARYLAND

GENERAL SHEET NOTES:

1. REFER TO OTHER DISCIPLINES FOR RELATED WORK TO ALTITUDE VAULT.
2. INSPECT AND CLEAN VAULT DRAIN. DRAIN GRATING TO BE REPLACED UPON DRAIN CLEANING.
3. TEMPORARY HYDROPNEUMATIC TANKS ARE SHOWN FOR REFERENCE ONLY. CONTRACTOR IS RESPONSIBLE FOR COORDINATING INSTALLATION REQUIREMENTS WITH THE HYDROPNEUMATIC TANK SUPPLIER.
4. TEMPORARY HYDROPNEUMATIC TANKS SHALL BE ONLINE, TESTED, AND APPROVED PRIOR TO COMMENCING ANY WORK AT THE ELEVATED STORAGE TANK SITE. REFER TO SPECIFICATIONS FOR SEQUENCING AND EQUIPMENT REQUIREMENTS.
5. CONTRACTOR IS RESPONSIBLE FOR COORDINATING WITH BALTIMORE COUNTY TO OBTAIN MDSHA PERMIT FOR WORKING IN RIGHT OF WAY.
6. REFER TO C-5 FOR GENERAL TEMPORARY HYDRO PNEUMATIC TANK CONFIGURATION.

LEGEND

	EXISTING BUILDING
XX	EXISTING CONTOUR
OHE	EXISTING OVERHEAD ELECTRIC
UGE	EXISTING UNDERGROUND ELECTRIC
E	EXISTING ELECTRIC MANHOLE
	EXISTING FENCELINE
	EXISTING FIRE HYDRANT
G	EXISTING GAS
GV	EXISTING GAS VALVE
	EXISTING PROPERTY LINE
	EXISTING PAVING
	EXISTING SANITARY
S	EXISTING SANITARY MANHOLE
	EXISTING STREET LIGHT
SD	EXISTING STORMDRAIN
D	EXISTING STORMDRAIN MANHOLE
	EXISTING TELEPHONE
	EXISTING UTILITY POLE
WM	EXISTING WATER METER
WV	EXISTING WATER VALVE
	REMOVE/DEMOLITION
	REMOVE AGGREGATE BASE AND REPLACE IN KIND

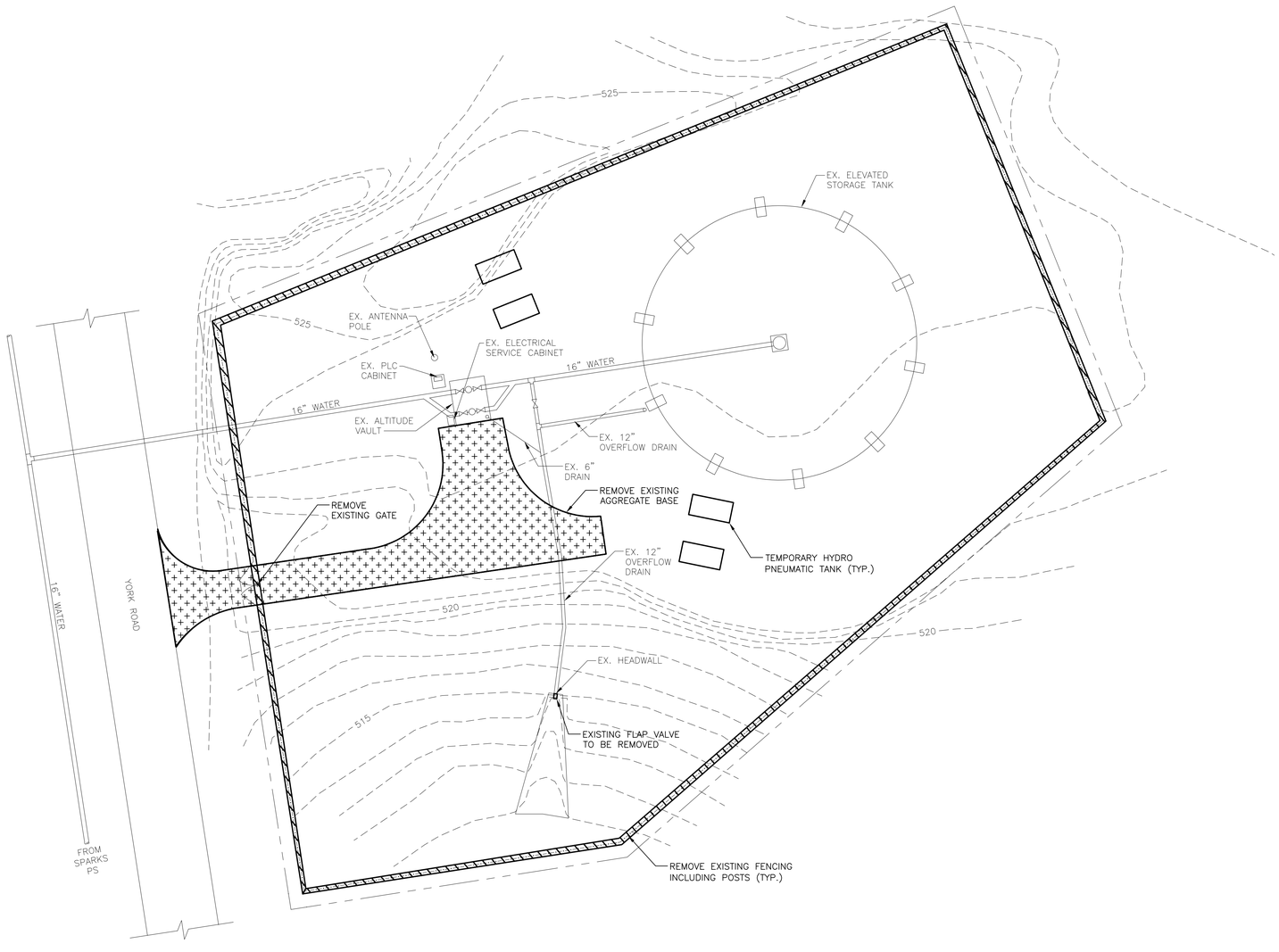

ELEVATED STORAGE TANK – DEMOLITION SITE PLAN

SCALE: 1" = 20'

10' 0 10' 20'
SCALE: 1"= 20'-0"

CITY OF BALTIMORE	REVISION – CITY OF BALTIMORE
CHIEF, OFFICE OF ENGINEERING AND CONSTRUCTION DATE	CHIEF, FACILITIES ENGINEERING SECTION DATE

SEAL: STATE OF MARYLAND – JUDITH A. CARROLL – No. 14446 – PROFESSIONAL ENGINEER

DATE : 9/17/2020

PROFESSIONAL CERTIFICATION

I HEREBY CERTIFY THAT THESE DOCUMENTS WERE PREPARED OR APPROVED BY ME, AND THAT I AM A DULY LICENSED PROFESSIONAL ENGINEER UNDER THE LAWS OF THE STATE OF MARYLAND. LICENSE NO. 14446, EXPIRATION DATE 05/25/2021.

ENGINEER: CARROLL ENGINEERING
215 SCHILLING CIR. SUITE 102
HUNT VALLEY, MD 21031

AS-BUILT PER RECORD PRINT
BY:
DATE:

DESIGN BY: GHT
DRAWN BY: GHT
CHKD BY: CMS

REVISION	BY	DATE
CONTRACT COMPLETION BOX		

P.W.A. NO.	KEY SHEET	POSITION SHT
–	DD-SE	82 NW 5,6
R.O.W NO.		
–		

DRAWING SCALE	
PLAN SCALE:	AS SHOWN
PROFILE SCALE:	N/A
	N/A

DEPARTMENT OF PUBLIC WORKS: SEE DRAWING 2020-0428 FOR ORIGINAL SIGNATURES

BUREAU OF ENGINEERING AND CONSTRUCTION	HIGHWAYS	STRUCTURES	STORM DRAINS	SEWER	WATER	FIELD ENGINEER	BUR. OF ENGINEERING & CONSTRUCTION
SEE DRAWING 2020-0428 FOR ORIGINAL SIGNATURES							

CONTRACT COMPLETION BOX
CONTRACTOR:
DATE COMPLETED:
INSPECTOR:
PIPE MATERIAL (Pressure Only)
DWG. FILENAME:

BALTIMORE COUNTY DEPARTMENT OF PUBLIC WORKS BUREAU OF ENGINEERING & CONSTRUCTION

SPARKS PUMPING STATION

ELEVATED STORAGE TANK – DEMOLITION SITE PLAN

SPARKS WATER PUMPING STATION AND ELEVATED WATER STORAGE TANK IMPROVEMENTS

SUBDIVISION: SPARKS, MD ELECTION DIST. NO.: 8C3

SHEET DESIGNATION	CONTRACT NUMBER
C-3	20094WXO

JOB ORDER NUMBER 231-203-0035-0514

SHEET 6 OF 71

DRAWING NUMBER 2020-0433

FILE NO.: REV. 4/17/17

ELEVATED STORAGE TANK – NEW WORK SITE PLAN

SCALE: 1" = 20'

GENERAL SHEET NOTES:

1. EXISTING UNDERGROUND UTILITIES SHOWN ON THE PLANS ARE BASED ON THE BEST AVAILABLE INFORMATION AND ARE SHOWN FOR THE CONVENIENCE OF THE CONTRACTOR ONLY. NO GUARANTEE IS MADE OR IMPLIED REGARDING THE ACCURACY OR COMPLETENESS THEREOF. THE CONTRACTOR IS RESPONSIBLE FOR THE VERIFICATION OF DEPTH, SIZE AND MATERIAL, AND LOCATION OF ALL UNDERGROUND UTILITIES TO HIS OWN SATISFACTION BEFORE BEGINNING ANY EXCAVATION OR UTILITY INSTALLATION. THE OWNER AND ENGINEER DISCLAIM ANY RESPONSIBILITY FOR THE ACCURACY OR COMPLETENESS OF SAID INFORMATION. IF THE CONTRACTOR RELIES ON SAID INFORMATION, HE DOES SO AT HIS OWN RISK. THE GIVING OF INFORMATION ON THE PLANS DOES NOT RELIEVE THE CONTRACTOR OF HIS OBLIGATION TO SUPPORT AND PROTECT ALL SHOWN OR NOT SHOWN EXISTING UTILITIES AND APPURTENANCES. SHOULD ANY EXISTING UTILITY BE DAMAGE BY THE CONTRACTOR, THE CONTRACTOR SHALL REPAIR THE DAMAGED CAUSED TO THE UTILITY OWNER'S SATISFACTION, AT THE CONTRACTOR'S EXPENSE.
2. REFER TO OTHER DISCIPLINES FOR WORK RELATED TO ALTITUDE VAULT.
3. TEMPORARY HYDROPNEUMATIC TANKS SHALL BE ONLINE, TESTED, AND APPROVED PRIOR TO COMMENCING ANY WORK AT THE ELEVATED STORAGE TANK SITE. REFER TO SPECIFICATIONS FOR SEQUENCING AND EQUIPMENT REQUIREMENTS.
4. RESTORE SITE TO EXISTING CONDITIONS AFTER REMOVAL OF HYDROPNEUMATIC TANKS. ALL GRADING AND SEEDING SHALL BE IN ACCORDANCE WITH EROSION AND SEDIMENT CONTROL PLAN REQUIREMENTS.
5. CONTRACTOR IS RESPONSIBLE FOR COORDINATING WITH BALTIMORE COUNTY TO OBTAIN MDSHA PERMIT FOR WORKING IN RIGHT OF WAY.

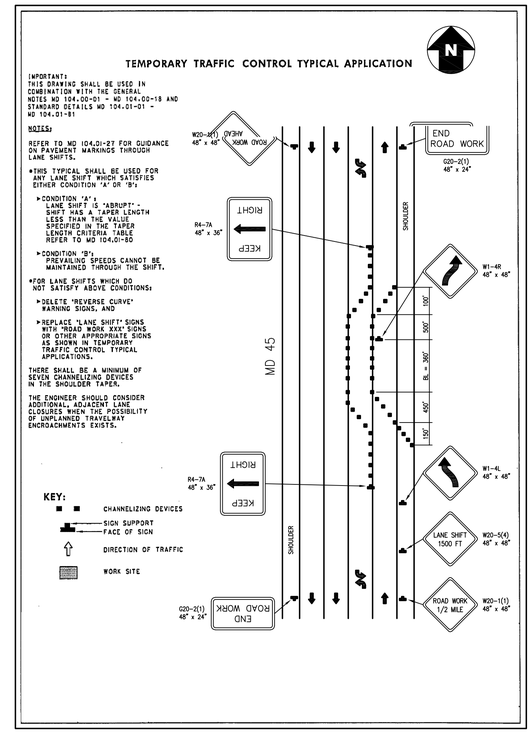

LEGEND

- EXISTING BUILDING
- EXISTING CONTOUR
- EXISTING OVERHEAD ELECTRIC
- EXISTING UNDERGROUND ELECTRIC
- EXISTING ELECTRIC MANHOLE
- EXISTING FENCELINE
- EXISTING FIRE HYDRANT
- EXISTING GAS
- EXISTING GAS VALVE
- EXISTING PROPERTY LINE
- EXISTING PAVING
- EXISTING SANITARY
- EXISTING STREET LIGHT
- EXISTING STORMDRAIN
- EXISTING STORMDRAIN MANHOLE
- EXISTING TELEPHONE
- EXISTING UTILITY POLE
- EXISTING WATER METER
- EXISTING WATER VALVE
- PROPOSED WORK
- PROPOSED ASPHALT PAVING

MAINTENANCE OF TRAFFIC NOTES:

1. NO WORK IS TO BEGIN UNTIL ADVANCED WARNING SIGNS, DRUMS, CHANNELIZED DEVICES AND BARRIERS ARE IN PLACE AND OPERATIONAL.
2. THE CONTRACTOR SHALL LIMIT THEIR WORKING HOURS FROM MONDAY – FRIDAY 9:30 AM – 3:30 PM. ALL LANE CLOSURES, DETOURS AND LANE SHIFTS SHALL BE REMOVED FROM THE ROADWAYS SO ALL EXISTING LANES SHALL BE OPEN AND FULLY OPERATIONAL BY 3:30 PM.
3. NORTHBOUND MD 45 THRU TRAFFIC SHALL BE SHIFTED ONTO THE MEDIAN TWO-WAY LEFT TURN LANE. THE EXISTING SOUTHBOUND MD 45 THRU LANES SHALL REMAIN OPERATIONAL. SEE DETAIL ON THIS PLAN SHEET.
4. THE CONTRACTOR SHALL HAVE ALL OPEN TRENCHES EITHER BACK-FILLED OR STEEL PLATED BY THE END OF THE WORKING DAY SO ALL EXISTING ROADWAYS ARE FULLY OPERATIONAL.
5. THE CONTRACTOR SHALL MAINTAIN ACCESS TO ALL EXITING RESIDENTIAL AND BUSINESS DRIVEWAYS THROUGHOUT THE CONSTRUCTION DURATION.
6. DURING NON-CONSTRUCTION TIMES, ALL TEMPORARY WARNING SIGNS NOT APPLICABLE OR NEEDED, SHALL BE EITHER COVERED OR TURNED AWAY FROM TRAFFIC.
7. AT THE COMPLETION OF ALL ROAD WORK, THE CONTRACTOR SHALL REMOVE ALL TEMPORARY WARNING SIGNS, DRUMS AND BARRIERS.

10' 0 10' 20'
SCALE: 1"= 20'-0"

CONTRACT COMPLETION BOX
CONTRACTOR:
DATE COMPLETED:
INSPECTOR:
PIPE MATERIAL (Pressure Only)

DWG. FILENAME:

CITY OF BALTIMORE	REVISION – CITY OF BALTIMORE
CHIEF, OFFICE OF ENGINEERING AND CONSTRUCTION DATE	CHIEF, FACILITIES ENGINEERING SECTION DATE

SEAL: STATE OF MARYLAND – JOSEPH A. CARROLL JR. – No. 14446 – PROFESSIONAL ENGINEER

DATE: 9/17/2020

PROFESSIONAL CERTIFICATION

I HEREBY CERTIFY THAT THESE DOCUMENTS WERE PREPARED OR APPROVED BY ME, AND THAT I AM A DULY LICENSED PROFESSIONAL ENGINEER UNDER THE LAWS OF THE STATE OF MARYLAND. LICENSE NO. 14446, EXPIRATION DATE 05/25/2021.

ENGINEER: CARROLL ENGINEERING
215 SCHILLING CIR. SUITE 102
HUNT VALLEY, MD 21031

AS-BUILT PER RECORD PRINT
BY:
DATE:

DESIGN BY: GHT
DRAWN BY: GHT
CHKD BY: CMS

REVISION	BY	DATE
CONTRACT COMPLETION BOX		

P.W.A. NO.	KEY SHEET	POSITION SHT
–	DD-SE	82 NW 5,6
R.O.W NO.		
–		

DRAWING SCALE	
PLAN SCALE:	AS SHOWN
PROFILE SCALE:	N/A
	N/A

DEPARTMENT OF PUBLIC WORKS: SEE DRAWING 2020-0428 FOR ORIGINAL SIGNATURES

BUREAU OF ENGINEERING AND CONSTRUCTION	HIGHWAYS	STRUCTURES	STORM DRAINS	SEWER	WATER	FIELD ENGINEER	BUR. OF ENGINEERING & CONSTRUCTION
SEE DRAWING 2020-0428 FOR ORIGINAL SIGNATURES							

BALTIMORE COUNTY DEPARTMENT OF PUBLIC WORKS BUREAU OF ENGINEERING & CONSTRUCTION

SPARKS PUMPING STATION

ELEVATED STORAGE TANK – NEW WORK SITE PLAN

SPARKS WATER PUMPING STATION AND ELEVATED WATER STORAGE TANK IMPROVEMENTS

SUBDIVISION: SPARKS, MD ELECTION DIST. NO.: 8C3

SHEET DESIGNATION	CONTRACT NUMBER
C-4	20094WXO
JOB ORDER NUMBER	
231-203-0035-0514	
SHEET 7 OF 71	
DRAWING NUMBER	
2020-0434	
FILE NO.:	REV. 05/09

BALTIMORE COUNTY MARYLAND

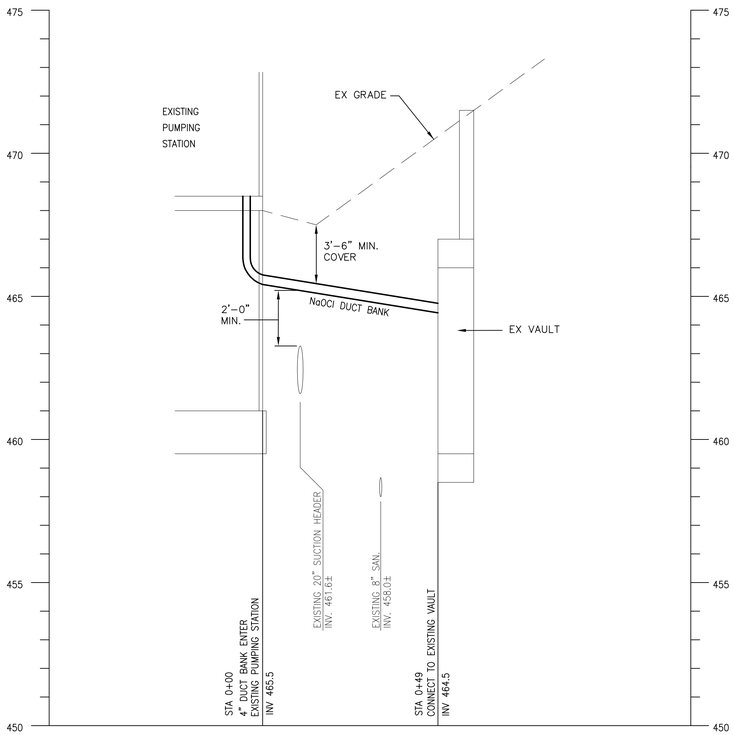

PROFILE NaOCl DUCT BANK

SCALE: HORIZ. 1"=20' VERT. 1"=5'

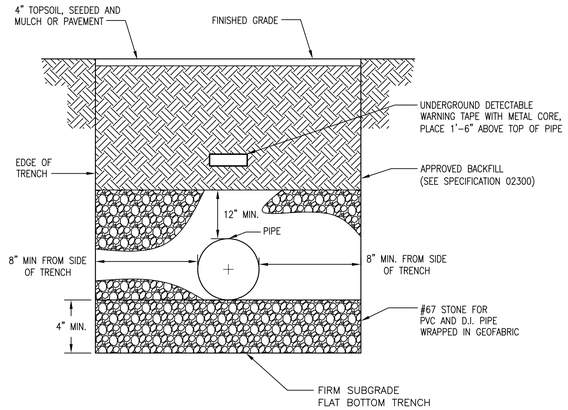

TYPICAL TRENCHING DETAIL

SCALE: NOT TO SCALE

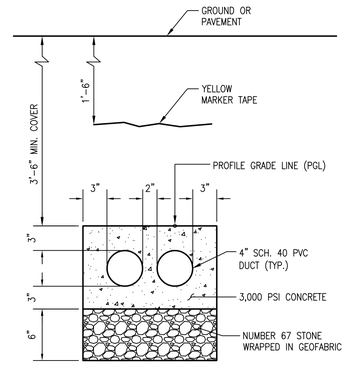

NaOCl DUCT BANK DETAIL

SCALE: NOT TO SCALE

GENERAL NOTES:

1. CONTRACTOR SHALL PROTECT ALL AREAS ADJACENT TO THE DESIGNATED LIMITS OF DISTURBANCE AND SHALL RESTORE ANY AND ALL AREAS DISTURBED DURING CONSTRUCTION TO THEIR ORIGINAL OR BETTER CONDITION AT HIS OWN EXPENSE.
2. NO DISTURBED AREA SHALL BE LEFT UN-STABILIZED OVERNIGHT UNLESS RUNOFF IS DIRECTED TO AN APPROVED SEDIMENT CONTROL DEVICE.
3. INFORMATION SHOWN ON THIS DRAWING HAS BEEN PROVIDED AS A GUIDE TO ASSIST THE CONTRACTOR IN ESTABLISHING THE LOCATIONS OF PROPOSED CONSTRUCTION WITH RESPECT TO EXISTING SITE IMPROVEMENTS. IT IS THE RESPONSIBILITY OF THE CONTRACTOR TO PROVIDE ALL CONSTRUCTION SURVEY LAYOUT REQUIRED AND TO CONFIRM ALL INFORMATION SHOWN HEREON.
4. UNDERGROUND UTILITIES ARE SHOWN ON THIS DRAWING FOR THE CONVENIENCE OF THE USER OF THE DRAWING AND THERE IS NO WARRANTY OR GUARANTEE AS TO THE CORRECTNESS OR COMPLETENESS OF THE INFORMATION GIVEN. IT IS THE CONTRACTOR RESPONSIBILITY TO VERIFY THE HORIZONTAL AND VERTICAL LOCATION OF ALL EXISTING TO HIS OWN SATISFACTION.
5. CONTRACTOR SHALL CONTACT MISS UTILITY AT 1-800-257-7777 TEN DAYS PRIOR TO BEGINNING ANY CONSTRUCTION ACTIVITY.
6. ALL EXISTING FACILITIES SHALL REMAIN IN OPERATION DURING ALL PHASES OF CONSTRUCTION.
7. CONTRACTOR SHALL COORDINATE WITH THE OWNER REGARDING PERMISSIBLE STAGING AND LAY DOWN AREAS.
8. TRENCH WORK SHALL COMPLY WITH THE OCCUPATIONAL SAFETY AND HEALTH ADMINISTRATION EXCAVATION SAFETY STANDARDS, 29 C.F.R.S. 1926.650 SUBPART P.
9. ALL WORK SHALL BE DONE IN ACCORDANCE WITH THE BALTIMORE COUNTY "STANDARD SPECIFICATIONS FOR CONSTRUCTION AND MATERIALS".

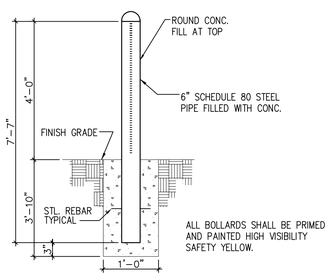

BOLLARD – DETAIL

SCALE: NOT TO SCALE

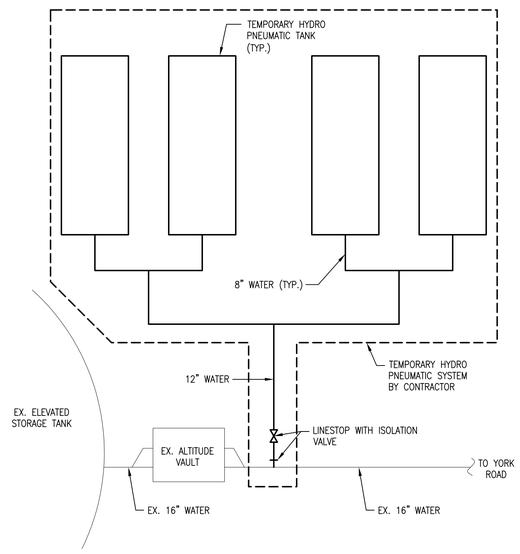

HYDRO PNEUMATIC TANK – SCHEMATIC

SCALE: NOT TO SCALE

10' 0 10' 20'
SCALE: 1"= 20'-0"

5' 0 5' 10'
SCALE: 1"= 5'-0"

CONTRACT COMPLETION BOX
CONTRACTOR:
DATE COMPLETED:
INSPECTOR:
PIPE MATERIAL (Pressure Only)

DWG. FILENAME:

CITY OF BALTIMORE	REVISION – CITY OF BALTIMORE
CHIEF, OFFICE OF ENGINEERING AND CONSTRUCTION — DATE	CHIEF, FACILITIES ENGINEERING SECTION — DATE

SEAL: STATE OF MARYLAND — JUDITH A. CARROLL — No. 14446 — PROFESSIONAL ENGINEER

DATE: 9/17/2020

PROFESSIONAL CERTIFICATION

I HEREBY CERTIFY THAT THESE DOCUMENTS WERE PREPARED OR APPROVED BY ME, AND THAT I AM A DULY LICENSED PROFESSIONAL ENGINEER UNDER THE LAWS OF THE STATE OF MARYLAND. LICENSE NO. 14446, EXPIRATION DATE 05/25/2021.

ENGINEER: CARROLL ENGINEERING, 215 SCHILLING CIR. SUITE 102, HUNT VALLEY, MD 21031

AS-BUILT PER RECORD PRINT — BY: DATE:

DESIGN BY: GHT — DRAWN BY: GHT — CHKD BY: CMS

REVISION	BY	DATE
CONTRACT COMPLETION BOX		

P.W.A. NO.	KEY SHEET	POSITION SHT
–	V-NE DD-SE	77 NW 5,6 82 NW 5,6
R.O.W NO. –		

DRAWING SCALE	
PLAN SCALE:	AS SHOWN
PROFILE SCALE:	N/A
	N/A

DEPARTMENT OF PUBLIC WORKS: SEE DRAWING 2020-0428 FOR ORIGINAL SIGNATURES

BUREAU OF ENGINEERING AND CONSTRUCTION	HIGHWAYS	STRUCTURES	STORM DRAINS	SEWER	WATER	FIELD ENGINEER	BUR. OF ENGINEERING & CONSTRUCTION
SEE DRAWING 2020-0428 FOR ORIGINAL SIGNATURES							

BALTIMORE COUNTY DEPARTMENT OF PUBLIC WORKS BUREAU OF ENGINEERING & CONSTRUCTION

SPARKS PUMPING STATION

CIVIL DETAILS

SPARKS WATER PUMPING STATION AND ELEVATED WATER STORAGE TANK IMPROVEMENTS

SUBDIVISION: SPARKS, MD ELECTION DIST. NO.: 8C3

SHEET DESIGNATION	CONTRACT NUMBER
C-5	20094WXO
JOB ORDER NUMBER	231-203-0035-0514
SHEET 8 OF 71	
DRAWING NUMBER	2020-0435
FILE NO.:	REV. 4/17/17

BALTIMORE COUNTY MARYLAND

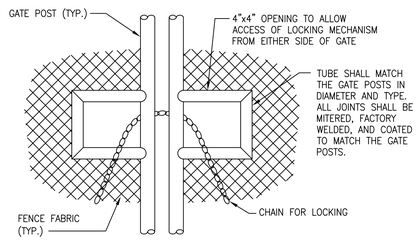

GATE LOCKING – TYPICAL DETAIL

SCALE: NOT TO SCALE

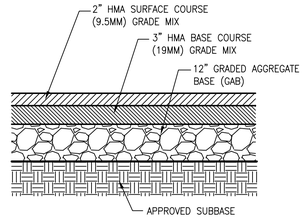

NOTES:

1. GRADE AND ALIGNMENT TO CONFORM WITH BALTIMORE COUNTY MINIMUM DESIGN STANDARDS.
2. PAVING WIDTH TO CONFORM TO EXISTING PAVING WIDTH AND BALTIMORE COUNTY STANDARD SPECIFICATIONS & DETAILS FOR CONSTRUCTION.
3. PRIME COAT AS SHOWN ON PLANS OR AS DIRECTED BY THE ENGINEER.

HD HOT MIX ASPHALT PAVING SECTION

SCALE: NOT TO SCALE

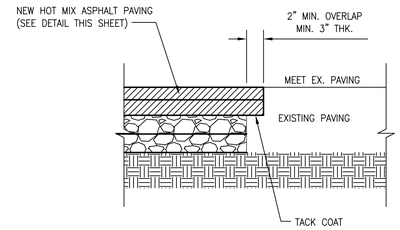

HOT MIX ASPHALT PAVING TRANSITION DETAIL

SCALE: NOT TO SCALE

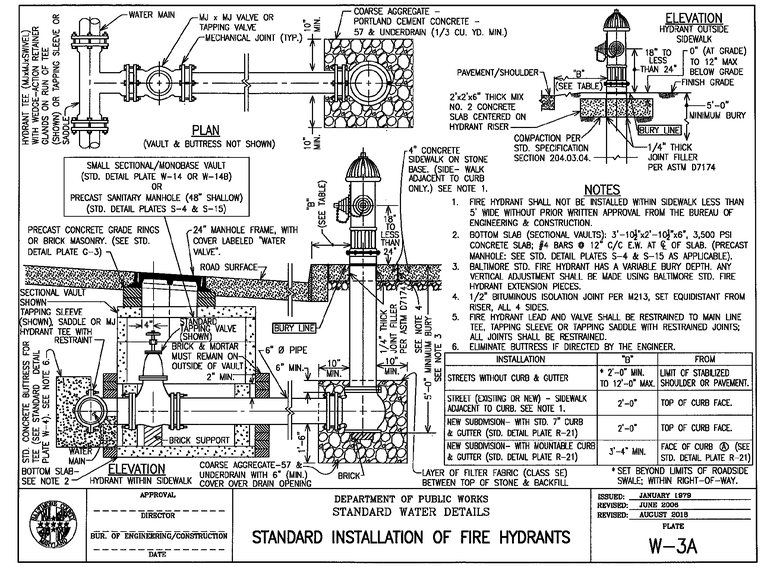

NOTES

1. FIRE HYDRANT SHALL NOT BE INSTALLED WITHIN SIDEWALK LESS THAN 5' WIDE WITHOUT PRIOR WRITTEN APPROVAL FROM THE BUREAU OF ENGINEERING & CONSTRUCTION.
2. BOTTOM SLAB (SECTIONAL VAULTS): 3'-10½"x2'-10½"x6", 3,500 PSI CONCRETE SLAB; #4 BARS @ 12" C/C E.W. AT ℄ OF SLAB. (PRECAST MANHOLE: SEE STD. DETAIL PLATES S-4 & S-15 AS APPLICABLE).
3. BALTIMORE STD. FIRE HYDRANT HAS A VARIABLE BURY DEPTH. ANY VERTICAL ADJUSTMENT SHALL BE MADE USING BALTIMORE STD. FIRE HYDRANT EXTENSION PIECES.
4. 1/2" BITUMINOUS ISOLATION JOINT PER M213, SET EQUIDISTANT FROM RISER, ALL 4 SIDES.
5. FIRE HYDRANT LEAD AND VALVE SHALL BE RESTRAINED TO MAIN LINE TEE, TAPPING SLEEVE OR TAPPING SADDLE WITH RESTRAINED JOINTS; ALL JOINTS SHALL BE RESTRAINED.
6. ELIMINATE BUTTRESS IF DIRECTED BY THE ENGINEER.

INSTALLATION	"B"	FROM
STREETS WITHOUT CURB & GUTTER	* 2'-0" MIN. TO 12'-0" MAX.	LIMIT OF STABILIZED SHOULDER OR PAVEMENT.
STREET (EXISTING OR NEW) – SIDEWALK ADJACENT TO CURB. SEE NOTE 1.	2'-0"	TOP OF CURB FACE.
NEW SUBDIVISION- WITH STD. 7" CURB & GUTTER (STD. DETAIL PLATE R-21)	2'-0"	TOP OF CURB FACE.
NEW SUBDIVISION- WITH MOUNTABLE CURB & GUTTER (STD. DETAIL PLATE R-21)	3'-4" MIN.	FACE OF CURB Ⓐ (SEE STD. DETAIL PLATE R-21)

* SET BEYOND LIMITS OF ROADSIDE SWALE; WITHIN RIGHT-OF-WAY.

APPROVAL
DIRECTOR
BUR. OF ENGINEERING/CONSTRUCTION
DATE

DEPARTMENT OF PUBLIC WORKS
STANDARD WATER DETAILS

STANDARD INSTALLATION OF FIRE HYDRANTS

ISSUED: JANUARY 1979
REVISED: JUNE 2006
REVISED: AUGUST 2018

PLATE
W-3A

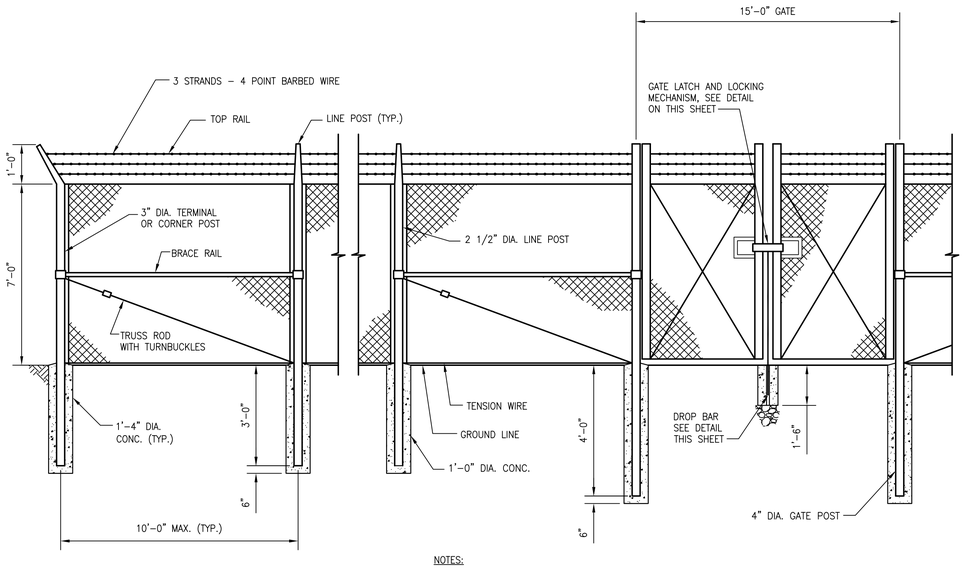

NOTES:

1. THE BOTTOM OF THE FABRIC SHALL BE TO FINISHED GRADE, BUT NO MORE THAN 2" ABOVE THE GROUND.
2. FENCE TO BE REPLACED IN SAME LOCATION AS EXISTING FENCE.

CHAIN LINK FENCE DETAIL – TANK SITE

SCALE: NOT TO SCALE

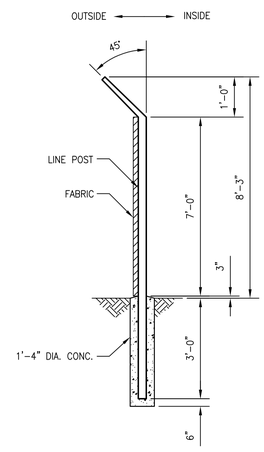

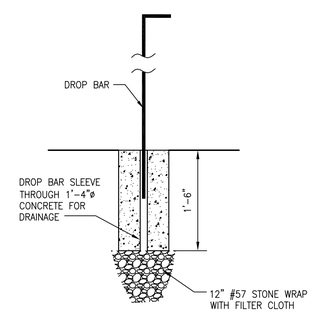

DROP BAR SLEEVE DETAIL

SCALE: NOT TO SCALE

CITY OF BALTIMORE	REVISION – CITY OF BALTIMORE
CHIEF, OFFICE OF ENGINEERING AND CONSTRUCTION — DATE	CHIEF, FACILITIES ENGINEERING SECTION — DATE

SEAL: STATE OF MARYLAND – JUDITH A. CARROLL – No. 14446 – PROFESSIONAL ENGINEER

DATE: 9/17/2020

PROFESSIONAL CERTIFICATION

I HEREBY CERTIFY THAT THESE DOCUMENTS WERE PREPARED OR APPROVED BY ME, AND THAT I AM A DULY LICENSED PROFESSIONAL ENGINEER UNDER THE LAWS OF THE STATE OF MARYLAND.
LICENSE NO. 14446, EXPIRATION DATE 05/25/2021

ENGINEER: CARROLL ENGINEERING
215 SCHILLING CIR. SUITE 102
HUNT VALLEY, MD 21031

AS-BUILT PER RECORD PRINT
BY:
DATE:

DESIGN BY: GHT
DRAWN BY: GHT
CHKD BY: CMS

REVISION	BY	DATE	P.W.A. NO.	KEY SHEET	POSITION SHT
			–	V-NE DD-SE	77 NW 5,6 82 NW 5,6
			R.O.W NO.		
CONTRACT COMPLETION BOX			–		

DRAWING SCALE	
PLAN SCALE:	AS SHOWN
PROFILE SCALE:	N/A
	N/A

DEPARTMENT OF PUBLIC WORKS
SEE DRAWING 2020-0428 FOR ORIGINAL SIGNATURES

BUREAU OF ENGINEERING AND CONSTRUCTION	HIGHWAYS	STRUCTURES	STORM DRAINS	SEWER	WATER	FIELD ENGINEER	BUR. OF ENGINEERING & CONSTRUCTION
SEE DRAWING 2020-0428 FOR ORIGINAL SIGNATURES							

CONTRACT COMPLETION BOX
CONTRACTOR:
DATE COMPLETED:
INSPECTOR:
PIPE MATERIAL (Pressure Only)

DWG. FILENAME:

BALTIMORE COUNTY DEPARTMENT OF PUBLIC WORKS BUREAU OF ENGINEERING & CONSTRUCTION

SPARKS PUMPING STATION

CIVIL DETAILS

SPARKS WATER PUMPING STATION AND ELEVATED WATER STORAGE TANK IMPROVEMENTS

SUBDIVISION: SPARKS, MD ELECTION DIST. NO.: 8C3

SHEET DESIGNATION	CONTRACT NUMBER
C-6	20094WXO
JOB ORDER NUMBER	
231-203-0035-0514	
SHEET 9 OF 71	
DRAWING NUMBER	
2020-0436	
FILE NO.:	REV. 03/17

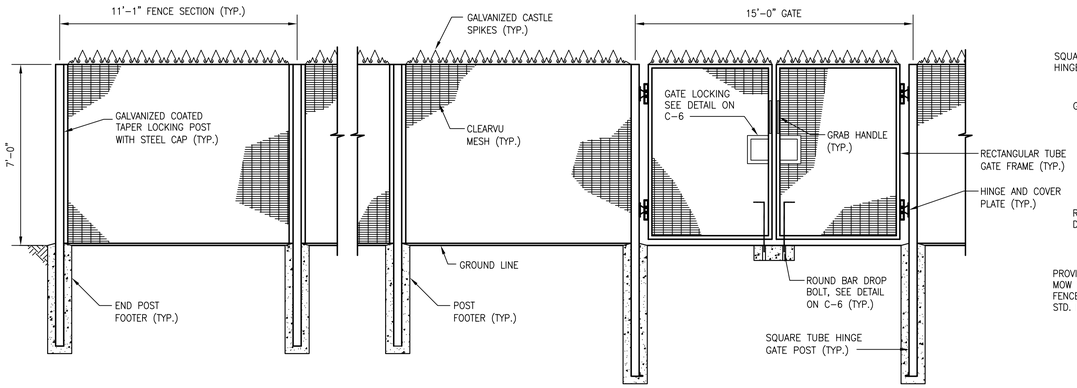

NOTES:

1. THE BOTTOM OF THE FABRIC SHALL BE TO FINISHED GRADE, BUT NO MORE THAN 2" ABOVE THE GROUND.
2. FOOTERS SHALL BE DESIGNED BY THE FENCE MANUFACTURER.
3. FOR ADDITIONAL INFORMATION, SEE SPECIFICATION 02821.

FENCE DETAIL – PUMPING STATION SITE

SCALE: NOT TO SCALE

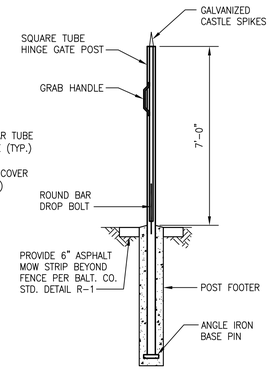

GATE SECTION

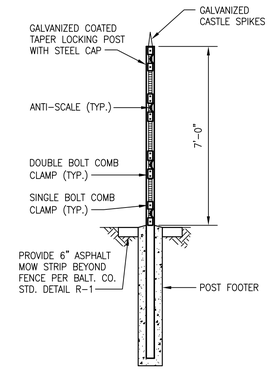

FENCE SECTION

EX. PIPE DIA.	MANHOLE DIA.	MAXIMUM * LATERAL PIPE DIA.	MINIMUM BASE DIA.
36"	72"	15"	84"
33"	72"	18"	84"
24", 27" OR 30"	72"	24"	84"
24"	48"	12"	60"
21"	48"	15"	60"
UP TO 18"	48"	SAME AS EX	60"

* BASED ON LATERAL PIPE AT 90° TO EXISTING PIPE. OTHER ANGLES MAY BE USED IF POSITIVE FLOW IS MAINTAINED WITHIN MANHOLE AND TWELVE INCHES OF REINFORCED "DOGHOUSE" WALL IS MAINTAINED BETWEEN PIPE OPENINGS.

NOTES

1. UNLESS OTHERWISE NOTED, MANHOLE TAPERS AND RISERS SHALL BE FURNISHED IN STRICT ACCORDANCE WITH ASTM DESIGNATION C-478 (LATEST) FOR "PRECAST REINFORCED CONCRETE MANHOLE SECTIONS".
2. CONCRETE:
   BASE SLAB – MIX #3, POURED-IN-PLACE
   DOGHOUSE RISER – 4500 psi PRECAST
3. PROVIDE 12" MINIMUM CLEARANCE FROM PROPOSED PIPE AND FROM DOGHOUSE OPENING TOP(S) TO UPPER RISER JOINT
4. PROVIDE 6" MINIMUM CLEARANCE FROM INCOMING LATERAL PIPE OPENING TO BOTTOM OF DOGHOUSE RISER.
5. MINIMUM 1" CLEARANCE SHALL BE MAINTAINED BETWEEN PIPES AND PRECAST DOGHOUSE PIPE OPENINGS. OPENINGS SHALL BE GROUTED WITH NON-SHRINK GROUT JOINT FILLER.
6. IN ALL CASES, A MINIMUM 12" WIDE SECTION OF MANHOLE WALL SHALL BE MAINTAINED BETWEEN PIPE OPENINGS IN DOGHOUSE RISER.
7. ALL REINFORCING STEEL SHALL CONFORM TO ASTM A-615, GRADE 60.
8. SEE STANDARD PLATE S-4 OR S-5 FOR 48" OR 60" DIA. SANITARY MANHOLE DETAILS RESPECTIVELY FOR USE WITH DOGHOUSE RISER SHOWN HERE.
9. MAXIMUM MANHOLE HEIGHT SHALL BE 30 FT. WHEN USING PRECAST DOGHOUSE RISER.
10. PRECAST MANHOLE RISER JOINTS: THE MANUFACTURER SHALL FORM MALE AND FEMALE ENDS OF JOINTS USING THEIR OWN DESIGN. THE JOINTS SHALL BE SEALED BY THE CONTRACTOR AND MADE WATER TIGHT USING THE MANUFACTURER'S RECOMMENDED ASTM OR AASHTO APPROVED SEALANT.
11. MINIMUM CIRCULAR REINFORCEMENT PER ASTM C76 TABLE III WALL B FOR PIPE DIAMETERS GREATER THAN 18 INCHES.
12. BREAK OUT ADDITIONAL PIPE AS REQUIRED TO PROVIDE POSITIVE FLOW FROM INCOMING LATERAL PIPE TO CENTER MANHOLE CHANNEL.
13. SEE STANDARD DETAIL PLATE C-4 FOR MANHOLE STEP SPECIFICATIONS, SPACING & PLACEMENT. USE A MINIMUM OF ONE MANHOLE STEP IN "DOGHOUSE" RISER UNIT.
14. BRICK SHALL BE ASTM C32 GRADE SS.

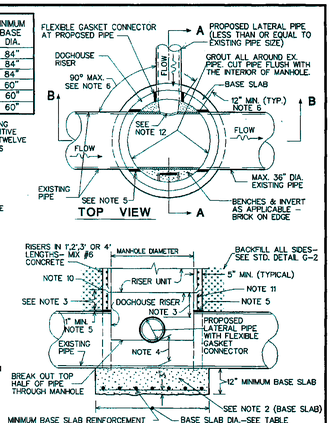

APPROVED: DIRECTOR, BUR. OF ENGINEERING & CONSTRUCTION — DATE 5/15/02

DEPARTMENT OF PUBLIC WORKS
SANITARY SEWER DETAILS

PRECAST MANHOLE "DOGHOUSE" RISER BUILT OVER EXISTING SEWER (FOR USE WITH PIPES 36" AND SMALLER)

ISSUED:	SEPTEMBER 16, 1991
REVISED:	AUGUST, 1997
REVISED:	MAY 2002

PLATE **S-15**

CITY OF BALTIMORE	REVISION – CITY OF BALTIMORE
CHIEF, OFFICE OF ENGINEERING AND CONSTRUCTION — DATE	CHIEF, FACILITIES ENGINEERING SECTION — DATE

SEAL: STATE OF MARYLAND – JOHN A. CARROLL – No. 14446 – PROFESSIONAL ENGINEER

DATE : 9/17/2020

PROFESSIONAL CERTIFICATION: I HEREBY CERTIFY THAT THESE DOCUMENTS WERE PREPARED OR APPROVED BY ME, AND THAT I AM A DULY LICENSED PROFESSIONAL ENGINEER UNDER THE LAWS OF THE STATE OF MARYLAND. LICENSE NO. 14446 EXPIRATION DATE 05/25/2021

ENGINEER: CARROLL ENGINEERING, 215 SCHILLING CIR. SUITE 102, HUNT VALLEY, MD 21031

AS-BUILT PER RECORD PRINT — BY: DATE:

DESIGN BY: GHT — DRAWN BY: GHT — CHKD BY: CMS

REVISION	BY	DATE
CONTRACT COMPLETION BOX		

P.W.A. NO.	KEY SHEET	POSITION SHT
–	V-NE DD-SE	77 NW 5,6 82 NW 5,6
R.O.W NO.		
–		

DRAWING SCALE: PLAN SCALE: AS SHOWN; PROFILE SCALE: N/A; N/A

DEPARTMENT OF PUBLIC WORKS: SEE DRAWING 2020-0428 FOR ORIGINAL SIGNATURES

BUREAU OF ENGINEERING AND CONSTRUCTION	HIGHWAYS	STRUCTURES	STORM DRAINS	SEWER	WATER	FIELD ENGINEER	BUR. OF ENGINEERING & CONSTRUCTION
SEE DRAWING 2020-0428 FOR ORIGINAL SIGNATURES							

CONTRACT COMPLETION BOX
CONTRACTOR:
DATE COMPLETED:
INSPECTOR:
PIPE MATERIAL (Pressure Only)
DWG. FILENAME:

BALTIMORE COUNTY DEPARTMENT OF PUBLIC WORKS BUREAU OF ENGINEERING & CONSTRUCTION

SPARKS PUMPING STATION

CIVIL DETAILS

SPARKS WATER PUMPING STATION AND ELEVATED WATER STORAGE TANK IMPROVEMENTS

SUBDIVISION: SPARKS, MD ELECTION DIST. NO.: 8C3

SHEET DESIGNATION	CONTRACT NUMBER
C-7	20094WXO

JOB ORDER NUMBER 231-203-0035-0514

SHEET 10 OF 71

DRAWING NUMBER 2020-0437

FILE NO.: REV. 8/17/

BALTIMORE COUNTY MARYLAND

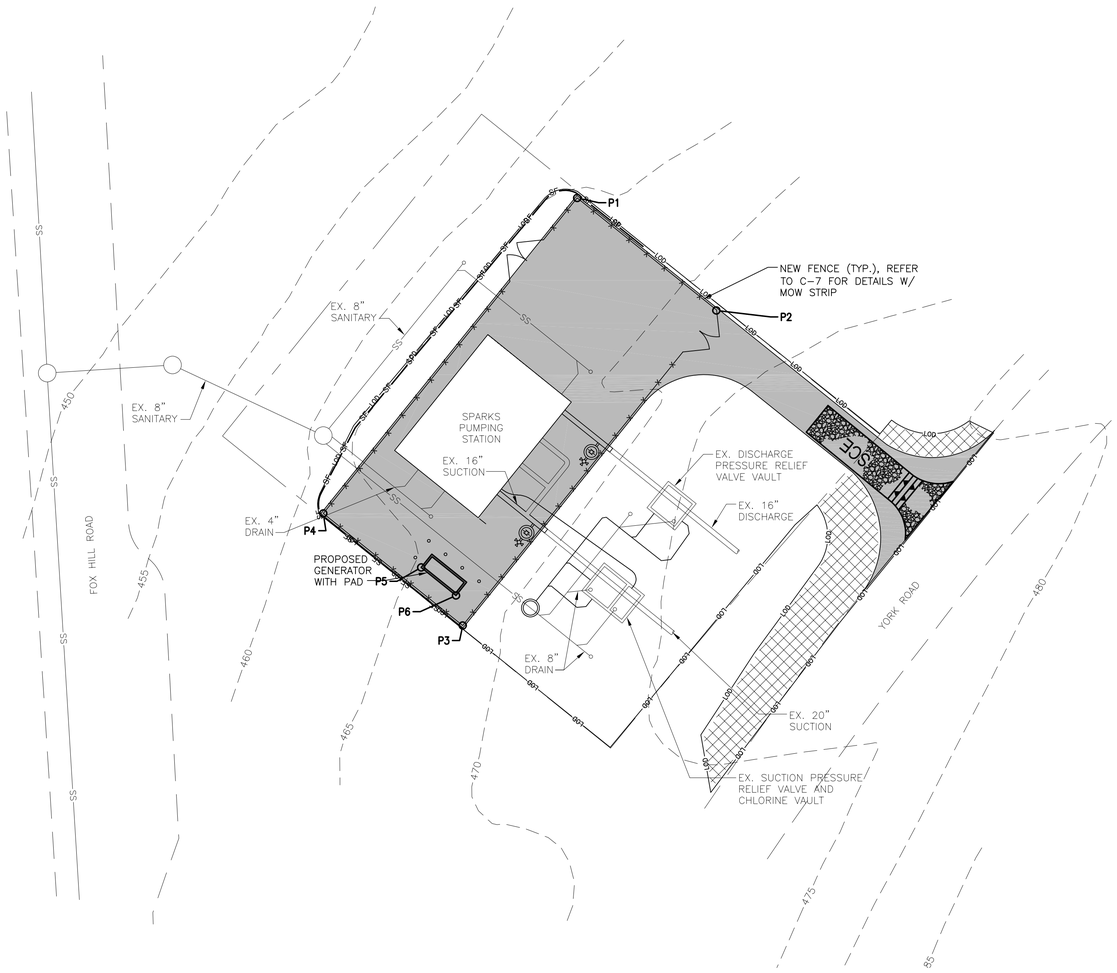

PUMPING STATION – EROSION AND SEDIMENT CONTROL SITE PLAN

SCALE: 1" = 20'

LEGEND

- EXISTING BUILDING
- EXISTING CONTOUR
- EXISTING OVERHEAD ELECTRIC
- EXISTING UNDERGROUND ELECTRIC
- EXISTING ELECTRIC MANHOLE
- EXISTING FENCELINE
- EXISTING FIRE HYDRANT
- EXISTING GAS
- EXISTING GAS VALVE
- EXISTING PROPERTY LINE
- EXISTING PAVING
- EXISTING SANITARY
- EXISTING STREET LIGHT
- EXISTING STORMDRAIN
- EXISTING STORMDRAIN MANHOLE
- EXISTING TELEPHONE
- EXISTING UTILITY POLE
- EXISTING WATERLINE
- EXISTING WATER METER
- EXISTING WATER VALVE
- PROPOSED WORK
- PROPOSED ASPHALT PAVING
- STABILIZED CONSTRUCTION ENTRANCE
- LIMIT OF DISTURBANCE
- SILT FENCE
- TEMPORARY ASPHALT BERM
- SEED AND TEMPORARY STABILIZATION MATTING

LIMIT OF DISTURBANCE = 15,000 Sq Ft

10' 0 10' 20'
SCALE: 1"= 20'-0"

CITY OF BALTIMORE	REVISION – CITY OF BALTIMORE
CHIEF, OFFICE OF ENGINEERING AND CONSTRUCTION — DATE	CHIEF, FACILITIES ENGINEERING SECTION — DATE

SEAL: STATE OF MARYLAND – JOHN A. CARROLL – No. 14446 – PROFESSIONAL ENGINEER
DATE: 9/17/2020

PROFESSIONAL CERTIFICATION
I HEREBY CERTIFY THAT THESE DOCUMENTS WERE PREPARED OR APPROVED BY ME, AND THAT I AM A DULY LICENSED PROFESSIONAL ENGINEER UNDER THE LAWS OF THE STATE OF MARYLAND.
LICENSE NO. 14446, EXPIRATION DATE 05/25/2021

ENGINEER: CARROLL ENGINEERING
215 SCHILLING CIR. SUITE 102
HUNT VALLEY, MD 21031

DESIGN BY: GHT
DRAWN BY: GHT
CHKD BY: CMS
AS-BUILT PER RECORD PRINT
BY:
DATE:

REVISION	BY	DATE
CONTRACT COMPLETION BOX		

P.W.A. NO.	KEY SHEET	POSITION SHT
–	V-NE	77 NW 5,6
R.O.W NO.		
–		

DRAWING SCALE	
PLAN SCALE:	AS SHOWN
PROFILE SCALE:	N/A
	N/A

DEPARTMENT OF PUBLIC WORKS
SEE DRAWING 2020-0428 FOR ORIGINAL SIGNATURES

BUREAU OF ENGINEERING AND CONSTRUCTION	HIGHWAYS	STRUCTURES	STORM DRAINS	SEWER	WATER	FIELD ENGINEER	BUR. OF ENGINEERING & CONSTRUCTION
SEE DRAWING 2020-0428 FOR ORIGINAL SIGNATURES							

BALTIMORE COUNTY DEPARTMENT OF PUBLIC WORKS BUREAU OF ENGINEERING & CONSTRUCTION

SPARKS PUMPING STATION

PUMPING STATION – EROSION AND SEDIMENT CONTROL PLAN

SPARKS WATER PUMPING STATION AND ELEVATED WATER STORAGE TANK IMPROVEMENTS

SUBDIVISION: SPARKS, MD ELECTION DIST. NO.: 8C3

CONTRACT COMPLETION BOX
CONTRACTOR:
DATE COMPLETED:
INSPECTOR:
PIPE MATERIAL (Pressure Only)

DWG. FILENAME:

SHEET DESIGNATION	CONTRACT NUMBER
C-8	20094WXO
	JOB ORDER NUMBER
	231-203-0035-0514
	SHEET 11 OF 71
	DRAWING NUMBER
	2020-0438
	FILE NO.:

BALTIMORE COUNTY MARYLAND

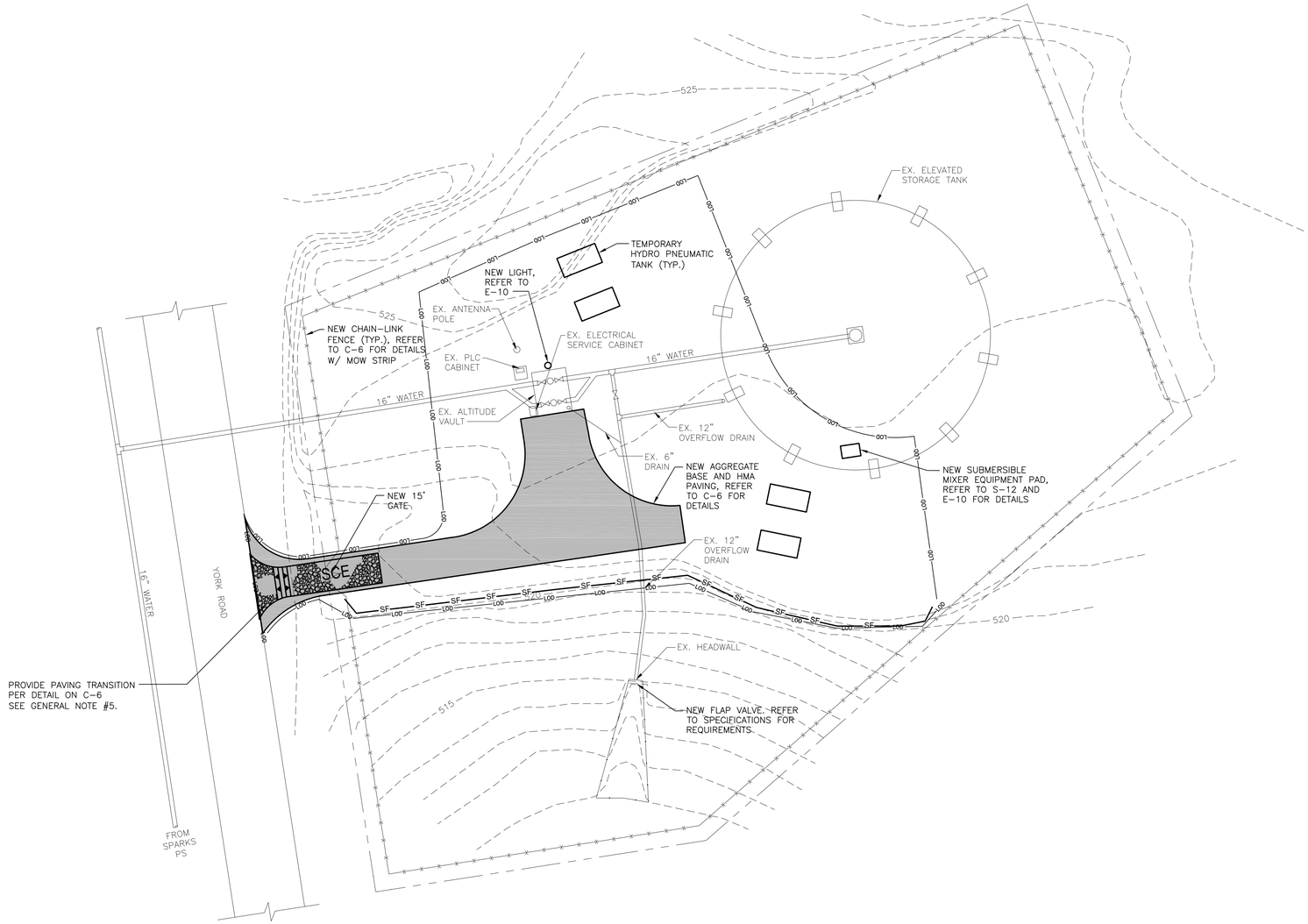

LEGEND

- EXISTING BUILDING
- EXISTING CONTOUR
- EXISTING OVERHEAD ELECTRIC
- EXISTING UNDERGROUND ELECTRIC
- EXISTING ELECTRIC MANHOLE
- EXISTING FENCELINE
- EXISTING FIRE HYDRANT
- EXISTING GAS
- EXISTING GAS VALVE
- EXISTING PROPERTY LINE
- EXISTING PAVING
- EXISTING SANITARY
- EXISTING STREET LIGHT
- EXISTING STORMDRAIN
- EXISTING STORMDRAIN MANHOLE
- EXISTING TELEPHONE
- EXISTING UTILITY POLE
- EXISTING WATER METER
- EXISTING WATER VALVE
- PROPOSED WORK
- PROPOSED ASPHALT PAVING
- STABILIZED CONSTRUCTION ENTRANCE
- LIMIT OF DISTURBANCE
- SILT FENCE

LIMIT OF DISTURBANCE = 16,900 Sq Ft

ELEVATED STORAGE TANK – EROSION AND SEDIMENT CONTROL SITE PLAN

SCALE: 1" = 20'

10' 0 10' 20'
SCALE: 1"= 20'-0"

CITY OF BALTIMORE	REVISION – CITY OF BALTIMORE
CHIEF, OFFICE OF ENGINEERING AND CONSTRUCTION — DATE	CHIEF, FACILITIES ENGINEERING SECTION — DATE

SEAL: STATE OF MARYLAND – JOSEPH A. CARROLL – No. 14446 – PROFESSIONAL ENGINEER

DATE : 9/17/2020

PROFESSIONAL CERTIFICATION

I HEREBY CERTIFY THAT THESE DOCUMENTS WERE PREPARED OR APPROVED BY ME, AND THAT I AM A DULY LICENSED PROFESSIONAL ENGINEER UNDER THE LAWS OF THE STATE OF MARYLAND.
LICENSE NO. 14446 , EXPIRATION DATE 05/25/2021 .

ENGINEER: CARROLL ENGINEERING
215 SCHILLING CIR. SUITE 102
HUNT VALLEY, MD 21031

AS-BUILT PER RECORD PRINT
BY:
DATE:

DESIGN BY: GHT
DRAWN BY: GHT
CHKD BY: CMS

REVISION	BY	DATE
CONTRACT COMPLETION BOX		

P.W.A. NO.	KEY SHEET	POSITION SHT
–	DD-SE	82 NW 5,6
R.O.W NO.		
–		

DRAWING SCALE	
PLAN SCALE:	AS SHOWN
PROFILE SCALE:	N/A
	N/A

DEPARTMENT OF PUBLIC WORKS: SEE DRAWING 2020-0428 FOR ORIGINAL SIGNATURES

BUREAU OF ENGINEERING AND CONSTRUCTION	HIGHWAYS	STRUCTURES	STORM DRAINS	SEWER	WATER	FIELD ENGINEER	BUR. OF ENGINEERING & CONSTRUCTION
SEE DRAWING 2020-0428 FOR ORIGINAL SIGNATURES							

BALTIMORE COUNTY DEPARTMENT OF PUBLIC WORKS BUREAU OF ENGINEERING & CONSTRUCTION

SPARKS PUMPING STATION

ELEVATED STORAGE TANK – EROSION AND SEDIMENT CONTROL PLAN

SPARKS WATER PUMPING STATION AND ELEVATED WATER STORAGE TANK IMPROVEMENTS

SUBDIVISION: SPARKS, MD ELECTION DIST. NO.: 8C3

CONTRACT COMPLETION BOX
CONTRACTOR:
DATE COMPLETED:
INSPECTOR:
PIPE MATERIAL (Pressure Only)

DWG. FILENAME:

SHEET DESIGNATION	CONTRACT NUMBER
C-9	20094WXO

BALTIMORE COUNTY MARYLAND

JOB ORDER NUMBER	231-203-0035-0514
SHEET 12 OF 71	
DRAWING NUMBER	2020-0439
FILE NO.:	REV. 8/07/17

DETAIL B-1 STABILIZED CONSTRUCTION ENTRANCE

STANDARD SYMBOL — SCE

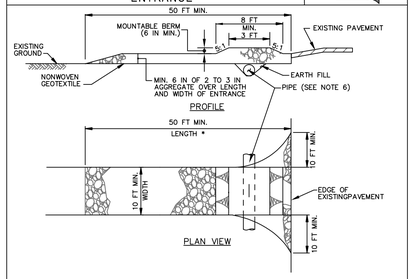

CONSTRUCTION SPECIFICATIONS

1. PLACE STABILIZED CONSTRUCTION ENTRANCE IN ACCORDANCE WITH THE APPROVED PLAN. VEHICLES MUST TRAVEL OVER THE ENTIRE LENGTH OF THE SCE. USE MINIMUM LENGTH OF 50 FEET (*30 FEET FOR SINGLE RESIDENCE LOT). USE MINIMUM WIDTH OF 10 FEET. FLARE SCE 10 FEET MINIMUM AT THE EXISTING ROAD TO PROVIDE A TURNING RADIUS.
2. PIPE ALL SURFACE WATER FLOWING TO OR DIVERTED TOWARD THE SCE UNDER THE ENTRANCE, MAINTAINING POSITIVE DRAINAGE. PROTECT PIPE INSTALLED THROUGH THE SCE WITH A MOUNTABLE BERM WITH 5:1 SLOPES AND A MINIMUM OF 12 INCHES OF STONE OVER THE PIPE. PROVIDE PIPE AS SPECIFIED ON APPROVED PLAN. WHEN THE SCE IS LOCATED AT A HIGH SPOT AND HAS NO DRAINAGE TO CONVEY, A PIPE IS NOT NECESSARY. A MOUNTABLE BERM IS REQUIRED WHEN SCE IS NOT LOCATED AT A HIGH SPOT.
3. PREPARE SUBGRADE AND PLACE NONWOVEN GEOTEXTILE, AS SPECIFIED IN SECTION H-1 MATERIALS.
4. PLACE CRUSHED AGGREGATE (2 TO 3 INCHES IN SIZE) OR EQUIVALENT RECYCLED CONCRETE (WITHOUT REBAR) AT LEAST 6 INCHES DEEP OVER THE LENGTH AND WIDTH OF THE SCE.
5. MAINTAIN ENTRANCE IN A CONDITION THAT MINIMIZES TRACKING OF SEDIMENT. ADD STONE OR MAKE OTHER REPAIRS AS CONDITIONS DEMAND TO MAINTAIN CLEAN SURFACE, MOUNTABLE BERM, AND SPECIFIED DIMENSIONS. IMMEDIATELY REMOVE STONE AND/OR SEDIMENT SPILLED, DROPPED, OR TRACKED ONTO ADJACENT ROADWAY BY VACUUMING, SCRAPING, AND/OR SWEEPING. WASHING ROADWAY TO REMOVE MUD TRACKED ONTO PAVEMENT IS NOT ACCEPTABLE UNLESS WASH WATER IS DIRECTED TO AN APPROVED SEDIMENT CONTROL PRACTICE.

MARYLAND STANDARDS AND SPECIFICATIONS FOR SOIL EROSION AND SEDIMENT CONTROL

U.S. DEPARTMENT OF AGRICULTURE NATURAL RESOURCES CONSERVATION SERVICE	2011	MARYLAND DEPARTMENT OF ENVIRONMENT WATER MANAGEMENT ADMINISTRATION

DETAIL E-1 SILT FENCE

STANDARD SYMBOL — SF —

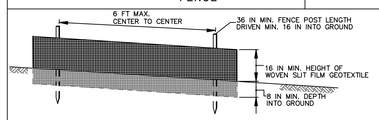

ELEVATION

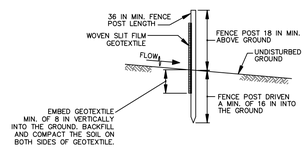

CROSS SECTION

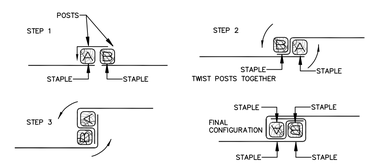

JOINING TWO ADJACENT SILT FENCE SECTIONS (TOP VIEW)

1 OF 2

MARYLAND STANDARDS AND SPECIFICATIONS FOR SOIL EROSION AND SEDIMENT CONTROL

U.S. DEPARTMENT OF AGRICULTURE NATURAL RESOURCES CONSERVATION SERVICE	2011	MARYLAND DEPARTMENT OF ENVIRONMENT WATER MANAGEMENT ADMINISTRATION

DETAIL E-1 SILT FENCE

STANDARD SYMBOL — SF —

CONSTRUCTION SPECIFICATIONS

1. USE WOOD POSTS 1¾ X 1¾ ± ⅛ INCH (MINIMUM) SQUARE CUT OF SOUND QUALITY HARDWOOD. AS AN ALTERNATIVE TO WOODEN POST USE STANDARD "T" OR "U" SECTION STEEL POSTS WEIGHING NOT LESS THAN 1 POUND PER LINEAR FOOT.
2. USE 36 INCH MINIMUM POSTS DRIVEN 16 INCH MINIMUM INTO GROUND NO MORE THAN 6 FEET APART.
3. USE WOVEN SLIT FILM GEOTEXTILE AS SPECIFIED IN SECTION H-1 MATERIALS AND FASTEN GEOTEXTILE SECURELY TO UPSLOPE SIDE OF FENCE POSTS WITH WIRE TIES OR STAPLES AT TOP AND MID-SECTION.
4. PROVIDE MANUFACTURER CERTIFICATION TO THE AUTHORIZED REPRESENTATIVE OF THE INSPECTION/ENFORCEMENT AUTHORITY SHOWING THAT THE GEOTEXTILE USED MEETS THE REQUIREMENTS IN SECTION H-1 MATERIALS.
5. EMBED GEOTEXTILE A MINIMUM OF 8 INCHES VERTICALLY INTO THE GROUND. BACKFILL AND COMPACT THE SOIL ON BOTH SIDES OF FABRIC.
6. WHERE TWO SECTIONS OF GEOTEXTILE ADJOIN: OVERLAP, TWIST, AND STAPLE TO POST IN ACCORDANCE WITH THIS DETAIL.
7. EXTEND BOTH ENDS OF THE SILT FENCE A MINIMUM OF FIVE HORIZONTAL FEET UPSLOPE AT 45 DEGREES TO THE MAIN FENCE ALIGNMENT TO PREVENT RUNOFF FROM GOING AROUND THE ENDS OF THE SILT FENCE.
8. REMOVE ACCUMULATED SEDIMENT AND DEBRIS WHEN BULGES DEVELOP IN SILT FENCE OR WHEN SEDIMENT REACHES 25% OF FENCE HEIGHT. REPLACE GEOTEXTILE IF TORN. IF UNDERMINING OCCURS, REINSTALL FENCE.

2 OF 2

MARYLAND STANDARDS AND SPECIFICATIONS FOR SOIL EROSION AND SEDIMENT CONTROL

U.S. DEPARTMENT OF AGRICULTURE NATURAL RESOURCES CONSERVATION SERVICE	2011	MARYLAND DEPARTMENT OF ENVIRONMENT WATER MANAGEMENT ADMINISTRATION

DETAIL C-5 TEMPORARY ASPHALT BERM

STANDARD SYMBOL — TAB —

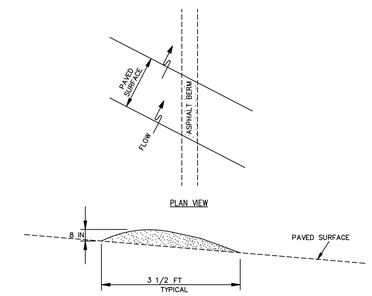

CROSS SECTION

CONSTRUCTION SPECIFICATIONS

1. CONSTRUCT BERM ON AN UNINTERRUPTED, CONTINUOUS GRADE.
2. INSTALL BERM TO CONFORM TO CROSS SECTION DIMENSIONS OF A UNIFORM HEIGHT OF 8 INCHES MINIMUM AND APPROXIMATE WIDTH OF 3½ FEET.
3. PROVIDE OUTLET PROTECTION AS REQUIRED ON PLAN.
4. COMPACT ASPHALT BERM.
5. REPAIR DAMAGED ASPHALT. REMOVE ACCUMULATED SEDIMENT AND DEBRIS. MAINTAIN POSITIVE DRAINAGE.
6. UPON REMOVAL OF ASPHALT BERM, RETURN TO ORIGINAL CONDITIONS OR AS SPECIFIED ON APPROVED PLAN.

MARYLAND STANDARDS AND SPECIFICATIONS FOR SOIL EROSION AND SEDIMENT CONTROL

U.S. DEPARTMENT OF AGRICULTURE NATURAL RESOURCES CONSERVATION SERVICE	2011	MARYLAND DEPARTMENT OF ENVIRONMENT WATER MANAGEMENT ADMINISTRATION

DETAIL B-4-6-B TEMPORARY SOIL STABILIZATION MATTING SLOPE APPLICATION

STANDARD SYMBOL — TSSMS – * lb/ft² (* INCLUDE SHEAR STRESS)

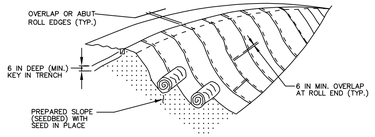

ISOMETRIC VIEW

CONSTRUCTION SPECIFICATIONS

1. USE MATTING THAT HAS A DESIGN VALUE FOR SHEAR STRESS EQUAL TO OR HIGHER THAN THE SHEAR STRESS DESIGNATED ON APPROVED PLANS.
2. USE TEMPORARY SOIL STABILIZATION MATTING MADE OF DEGRADABLE (LASTS 6 MONTHS MINIMUM) NATURAL OR MAN-MADE FIBERS (MOSTLY ORGANIC). MAT MUST HAVE UNIFORM THICKNESS AND DISTRIBUTION OF FIBERS THROUGHOUT AND BE SMOLDER RESISTANT. CHEMICALS USED IN THE MAT MUST BE NON-LEACHING AND NON-TOXIC TO VEGETATION AND SEED GERMINATION AND NON-INJURIOUS TO THE SKIN. IF PRESENT, NETTING MUST BE EXTRUDED PLASTIC WITH A MAXIMUM MESH OPENING OF 2x2 INCHES AND SUFFICIENTLY BONDED OR SEWN ON 2 INCH CENTERS ALONG LONGITUDINAL AXIS OF THE MATERIAL TO PREVENT SEPARATION OF THE NET FROM THE PARENT MATERIAL.
3. SECURE MATTING USING STEEL STAPLES, WOOD STAKES, OR BIODEGRADABLE EQUIVALENT. STAPLES MUST BE "U" OR "T" SHAPED STEEL WIRE HAVING A MINIMUM GAUGE OF NO. 11 AND NO. 8 RESPECTIVELY. "U" SHAPED STAPLES MUST AVERAGE 1 TO 1½ INCHES WIDE AND BE A MINIMUM OF 6 INCHES LONG. "T" SHAPED STAPLES MUST HAVE A MINIMUM 8 INCH MAIN LEG, A MINIMUM 1 INCH SECONDARY LEG, AND A MINIMUM 4 INCH HEAD. WOOD STAKES MUST BE ROUGH-SAWN HARDWOOD, 12 TO 24 INCHES IN LENGTH, 1x3 INCH IN CROSS SECTION, AND WEDGE SHAPED AT THE BOTTOM.
4. PERFORM FINAL GRADING, TOPSOIL APPLICATION, SEEDBED PREPARATION, AND PERMANENT SEEDING IN ACCORDANCE WITH SPECIFICATIONS. PLACE MATTING WITHIN 48 HOURS OF COMPLETING SEEDING OPERATIONS UNLESS END OF WORKDAY STABILIZATION IS SPECIFIED ON THE APPROVED EROSION & SEDIMENT CONTROL PLAN.
5. UNROLL MATTING DOWNSLOPE. LAY MAT SMOOTHLY AND FIRMLY UPON THE SEEDED SURFACE. AVOID STRETCHING THE MATTING.
6. OVERLAP OR ABUT ROLL EDGES PER MANUFACTURER RECOMMENDATIONS. OVERLAP ROLL ENDS BY 6 INCHES (MINIMUM), WITH THE UPSLOPE MAT OVERLAPPING ON TOP OF THE DOWNSLOPE MAT.
7. KEY IN THE UPSLOPE END OF MAT 6 INCHES (MINIMUM) BY DIGGING A TRENCH, PLACING THE MATTING ROLL END IN THE TRENCH, STAPLING THE MAT IN PLACE, REPLACING THE EXCAVATED MATERIAL, AND TAMPING TO SECURE THE MAT END IN THE KEY.
8. STAPLE/STAKE MAT IN A STAGGERED PATTERN ON 4 FOOT (MAXIMUM) CENTERS THROUGHOUT AND 2 FOOT (MAXIMUM) CENTERS ALONG SEAMS, JOINTS, AND ROLL ENDS.
9. ESTABLISH AND MAINTAIN VEGETATION SO THAT REQUIREMENTS FOR ADEQUATE VEGETATIVE ESTABLISHMENT ARE CONTINUOUSLY MET IN ACCORDANCE WITH SECTION B-4 VEGETATIVE STABILIZATION.

MARYLAND STANDARDS AND SPECIFICATIONS FOR SOIL EROSION AND SEDIMENT CONTROL

U.S. DEPARTMENT OF AGRICULTURE NATURAL RESOURCES CONSERVATION SERVICE	2011	MARYLAND DEPARTMENT OF ENVIRONMENT WATER MANAGEMENT ADMINISTRATION

CITY OF BALTIMORE	REVISION – CITY OF BALTIMORE
CHIEF, OFFICE OF ENGINEERING AND CONSTRUCTION — DATE	CHIEF, FACILITIES ENGINEERING SECTION — DATE

SEAL

STATE OF MARYLAND — JUDITH A. CARROLL — No. 14446 — PROFESSIONAL ENGINEER

DATE : 9/17/2020

PROFESSIONAL CERTIFICATION

I HEREBY CERTIFY THAT THESE DOCUMENTS WERE PREPARED OR APPROVED BY ME, AND THAT I AM A DULY LICENSED PROFESSIONAL ENGINEER UNDER THE LAWS OF THE STATE OF MARYLAND.

LICENSE NO. 14446, EXPIRATION DATE 05/25/2021

ENGINEER: CARROLL ENGINEERING
215 SCHILLING CIR. SUITE 102
HUNT VALLEY, MD 21031

AS-BUILT PER RECORD PRINT
BY:
DATE:

DESIGN BY: GHT
DRAWN BY: GHT
CHKD BY: CMS

REVISION	BY	DATE
CONTRACT COMPLETION BOX		

P.W.A. NO.	KEY SHEET	POSITION SHT
–	V-NE DD-SE	77 NW 5,6 82 NW 5,6
R.O.W NO.		
–		

DRAWING SCALE	
PLAN SCALE:	AS SHOWN
PROFILE SCALE:	N/A
	N/A

DEPARTMENT OF PUBLIC WORKS

SEE DRAWING 2020-0428 FOR ORIGINAL SIGNATURES

BUREAU OF ENGINEERING AND CONSTRUCTION	HIGHWAYS	STRUCTURES	STORM DRAINS	SEWER	WATER	FIELD ENGINEER	BUR. OF ENGINEERING & CONSTRUCTION

SEE DRAWING 2020-0428 FOR ORIGINAL SIGNATURES

BALTIMORE COUNTY DEPARTMENT OF PUBLIC WORKS BUREAU OF ENGINEERING & CONSTRUCTION

SPARKS PUMPING STATION

EROSION AND SEDIMENT CONTROL DETAILS

SPARKS WATER PUMPING STATION AND ELEVATED WATER STORAGE TANK IMPROVEMENTS

SUBDIVISION: SPARKS, MD ELECTION DIST. NO.: 8C3

CONTRACT COMPLETION BOX
CONTRACTOR:
DATE COMPLETED:
INSPECTOR:
PIPE MATERIAL (Pressure Only)

DWG. FILENAME:

SHEET DESIGNATION	CONTRACT NUMBER
C-10	20094WXO
	JOB ORDER NUMBER
	231-203-0035-0514
	SHEET 13 OF 71
	DRAWING NUMBER
	2020-0440
	FILE NO.:

BALTIMORE COUNTY MARYLAND

STANDARD EROSION AND SEDIMENT CONTROL NOTES

THE WATER MANAGEMENT ADMINISTRATION REQUIRES THAT THESE NOTES, IN THEIR ENTIRETY, BE INCLUDED ON THE EROSION AND SEDIMENT CONTROL PLAN. IT IS RECOGNIZED THAT EVERY NOTE MAY NOT APPLY TO ALL PROJECTS. THE REQUIREMENT OF ANY INDIVIDUAL NOTE NOT APPLICABLE TO THE SUBJECT PROJECT IS NOT BINDING UPON THE APPLICANT OR THE APPLICANT'S CONTRACTOR.

1. THE CONTRACTOR SHALL NOTIFY THE ADMINISTRATION (WMA) AT (410) 537–3510 SEVEN (7) DAYS BEFORE COMMENCING ANY LAND DISTURBING ACTIVITY AND, UNLESS WAIVED BY THE ADMINISTRATION, SHALL BE REQUIRED TO HOLD A PRE–CONSTRUCTION MEETING BETWEEN PROJECT REPRESENTATIVES AND A REPRESENTATIVE OF WMA.
2. THE CONTRACTOR MUST NOTIFY WMA IN WRITING AND BY TELEPHONE AT THE FOLLOWING POINTS:
   A. THE REQUIRED PRE–CONSTRUCTION MEETING.
   B. FOLLOWING INSTALLATION OF SEDIMENT CONTROL MEASURES.
   C. DURING THE INSTALLATION OF SEDIMENT BASINS (TO BE CONVERTED INTO PERMANENT STORMWATER MANAGEMENT STRUCTURES) AT THE REQUIRED INSPECTIONS POINTS (SEE INSPECTION CHECKLIST ON PLAN). NOTIFICATION PRIOR TO COMMENCING CONSTRUCTION OF EACH STEP IS MANDATORY.
   D. PRIOR TO REMOVAL OR MODIFICATION OF ANY SEDIMENT CONTROL STRUCTURE(S).
   E. PRIOR TO REMOVAL OF ALL SEDIMENT CONTROL DEVICES.
   F. PRIOR TO FINAL ACCEPTANCE.
3. THE CONTRACTOR SHALL CONSTRUCT ALL EROSION AND SEDIMENT CONTROL MEASURES PER THE APPROVED PLAN AND CONSTRUCTION SEQUENCE AND SHALL HAVE THEM INSPECTED AND APPROVED BY THE AGENCY INSPECTOR OR WMA INSPECTOR PRIOR TO BEGINNING ANY OTHER LAND DISTURBANCES. MINOR SEDIMENT CONTROL DEVICE LOCATION ADJUSTMENTS MAY BE MADE IN THE FIELD WITH THE APPROVAL OF THE WMA INSPECTOR. THE CONTRACTOR SHALL ENSURE THAT ALL RUNOFF FROM DISTURBED AREAS IS DIRECTED TO THE SEDIMENT CONTROL DEVICES AND SHALL NOT REMOVE ANY EROSION OR SEDIMENT CONTROL MEASURE WITHOUT PRIOR PERMISSION FROM WMA INSPECTOR AND AGENCY INSPECTOR. THE CONTRACTOR MUST OBTAIN PRIOR AGENCY AND WMA APPROVAL FOR CHANGES TO THE SEDIMENT CONTROL PLAN AND/OR SEQUENCE OF CONSTRUCTION.
4. THE CONTRACTOR SHALL PROTECT ALL POINTS OF CONSTRUCTION INGRESS AND EGRESS TO PREVENT THE DEPOSITION OF MATERIALS ONTO PUBLIC ROADS. ALL MATERIALS DEPOSITED ONTO PUBLIC ROADS SHALL BE REMOVED IMMEDIATELY.
5. THE CONTRACTOR SHALL INSPECT DAILY AND MAINTAIN CONTINUOUSLY IN AN EFFECTIVE OPERATING CONDITION ALL EROSION AND SEDIMENT CONTROL MEASURES UNTIL SUCH TIMES AS THEY ARE REMOVED WITH PRIOR PERMISSION FROM WMA INSPECTOR AND AGENCY INSPECTOR.
6. ALL SEDIMENT BASINS, TRAP EMBANKMENTS AND SLOPES, PERIMETER DIKES, SWALES AND ALL DISTURBED SLOPES STEEPER OR EQUAL TO 3:1 SHALL BE STABILIZED WITH SOD OR SEED AND ANCHORED STRAW, MULCH, OR OTHER APPROVED STABILIZATION MEASURES, AS SOON AS POSSIBLE BY NO LATER THAN SEVEN (7) CALENDAR DAYS AFTER ESTABLISHMENT. ALL AREAS DISTURBED OUTSIDE OF THE PERIMETER SEDIMENT CONTROL SYSTEM MUST BE MINIMIZED. MAINTENANCE MUST BE PERFORMED AS NECESSARY TO ENSURE CONTINUED STABILIZATION. (REQUIREMENT FOR STABILIZATION MAY BE REDUCED TO THREE (3) DAYS FOR SENSITIVE AREAS.)
7. THE CONTRACTOR SHALL APPLY SOD OR SEED AND ANCHORED STRAW MULCH, OR OTHER APPROVED STABILIZATION MEASURES TO ALL DISTURBED AREAS AND STOCKPILES WITHIN FOURTEEN (14) CALENDAR DAYS AFTER STRIPPING AND GRADING ACTIVITIES HAVE CEASED IN THE AREA. MAINTENANCE SHALL BE PERFORMED AS NECESSARY TO ENSURE CONTINUED STABILIZATION. (REQUIREMENT MAY BE REDUCED TO SEVEN (7) DAYS FOR SENSITIVE AREAS.)
8. PRIOR TO REMOVAL OF SEDIMENT CONTROL MEASURES, THE CONTRACTOR SHALL STABILIZE AND HAVE ESTABLISHED PERMANENT STABILIZATION FOR ALL CONTRIBUTORY DISTURBED AREAS USING SOD OR AN APPROVED PERMANENT SEED MIXTURE WITH REQUIRED SOIL AMENDMENTS AND AN APPROVED MULCH. WOOD FIBER MULCH MAY ONLY BE USED IN SEEDING SEASON WHERE THE SLOPE DOES NOT EXCEED 10% AND GRADING HAS BEEN DONE TO PROMOTE SHEET FLOW DRAINAGE. AREAS BROUGHT TO FINISHED GRADE DURING THE SEEDING SEASON SHALL BE PERMANENTLY STABILIZED AS SOON AS POSSIBLE, BUT NOT LATER THAN FOURTEEN (14) CALENDAR DAYS AFTER ESTABLISHMENT. WHEN PROPERTY IS BROUGHT TO FINISHED GRADE DURING THE MONTHS OF NOVEMBER THROUGH FEBRUARY, AND PERMANENT STABILIZATION IS FOUND TO BE IMPRACTICAL, TEMPORARY SEED AND ANCHORED STRAW MULCH SHALL BE APPLIED TO DISTURBED AREAS. THE FINAL PERMANENT STABILIZATION OF SUCH PROPERTY SHALL BE APPLIED BY MARCH 15 OR EARLIER IF GROUND AND WEATHER CONDITIONS ALLOW.
9. THE SITE'S APPROVAL LETTER, APPROVED EROSION AND SEDIMENT CONTROL PLANS, DAILY LOG BOOKS, AND TEST REPORTS SHALL BE AVAILABLE AT THE SITE FOR INSPECTION BY DULY AUTHORIZED OFFICIALS OF WMA AND THE AGENCY RESPONSIBLE FOR PROJECT.
10. SURFACE DRAINAGE FLOWS OVER UNSTABILIZED CUT AND FILL SLOPES SHALL BE CONTROLLED BY EITHER PREVENTING DRAINAGE FLOWS FROM TRAVERSING THE SLOPES OR BY INSTALLING PROTECTIVE DEVICES TO LOWER THE WATER DOWNSLOPE WITHOUT CAUSING EROSION. DIKES SHALL BE INSTALLED AND MAINTAINED AT THE TOP OF A CUT OR FILL SLOPE UNTIL THE SLOPE AND DRAINAGE AREA TO IT ARE FULLY STABILIZED, AT WHICH TIME THEY MUST BE REMOVED AND FINAL GRADING DONE TO PROMOTE SHEET FLOW DRAINAGE. PROTECTIVE METHODS MUST BE PROVIDED AT POINTS OF CONCENTRATED FLOW WHERE EROSION IS LIKELY TO OCCUR.
11. PERMANENT SWALES OR OTHER POINTS OF CONCENTRATED WATER FLOW SHALL BE STABILIZED WITH SOD OR SEED WITH AN APPROVED EROSION CONTROL MATTING, RIP–RAP, OR BY OTHER APPROVED STABILIZATION MEASURES.
12. TEMPORARY SEDIMENT CONTROL DEVICES MAY BE REMOVED, WITH PERMISSION OF WMA INSPECTOR AND AGENCY INSPECTORS, WITHIN THIRTY (30) CALENDAR DAYS FOLLOWING ESTABLISHMENT OF PERMANENT STABILIZATION IN ALL CONTRIBUTORY DRAINAGE AREAS. STORMWATER MANAGEMENT STRUCTURES USED TEMPORARILY FOR SEDIMENT CONTROL SHALL BE CONVERTED TO THE PERMANENT CONFIGURATION WITHIN THIS TIME PERIOD AS WELL.
13. NO PERMANENT CUT OR FILL SLOPE WITH A GRADIENT STEEPER THAN 3:1 WILL BE PERMITTED IN LAWN MAINTENANCE AREAS. A SLOPE GRADIENT OF UP TO 2:1 WILL BE PERMITTED IN NON–MAINTENANCE AREAS PROVIDED THAT THOSE AREAS ARE INDICATED ON THE EROSION AND SEDIMENT CONTROL PLAN WITH A LOW–MAINTENANCE GROUND COVER SPECIFIED FOR PERMANENT STABILIZATION. SLOPE GRADIENT STEEPER THAN 2:1 WILL NOT BE PERMITTED WITH VEGETATIVE STABILIZATION.
14. FOR FINISHED GRADING, THE CONTRACTOR SHALL PROVIDE ADEQUATE GRADIENTS TO PREVENT WATER FROM PONDING FOR MORE THAN (24) HOURS AFTER THE END OF A RAINFALL EVENT. DRAINAGE COURSES AND SWALE FLOW AREAS MAY TAKE AS LONG AS FORTY–EIGHT (48) HOURS AFTER THE END OF A RAINFALL EVENT TO DRAIN. AREAS DESIGNED TO HAVE STANDING WATER SHALL NOT BE REQUIRED TO MEET THIS REQUIREMENT.
15. SEDIMENT TRAPS OR BASINS ARE NOT PERMITTED WITHIN 20 FEET OF A FOUNDATION THAT EXISTS OR IS UNDER CONSTRUCTION. NO STRUCTURE MAY BE CONSTRUCTED WITHIN 20 FEET OF AN ACTIVE SEDIMENT TRAP OR BASIN.
16. THE WMA INSPECTOR HAS THE OPTION OF REQUIRING ADDITIONAL SAFETY OR SEDIMENT CONTROL MEASURES, IF DEEMED NECESSARY.
17. ALL TRAP DEPTH DIMENSIONS ARE RELATIVE TO THE OUTLET ELEVATION. ALL TRAPS MUST HAVE A STABLE OUTFALL. ALL TRAPS AND BASINS SHALL HAVE STABLE INFLOW POINTS.
18. VEGETATIVE STABILIZATION SHALL BE PERFORMED IN ACCORDANCE WITH THE STANDARDS AND SPECIFICATIONS FOR SOIL EROSION AND SEDIMENT CONTROL. REFER TO APPROPRIATE SPECIFICATIONS FOR TEMPORARY SEEDING, PERMANENT SEEDING, MULCHING, SODDING, AND GROUND COVERS.
19. SEDIMENT SHALL BE REMOVED AND THE TRAP OR BASIN RESTORED TO ITS ORIGINAL DIMENSIONS WHEN THE SEDIMENT HAS ACCUMULATED TO ONE QUARTER OF THE TOTAL DEPTH OF THE TRAP OR BASIN. TOTAL DEPTH SHALL BE MEASURED FROM THE TRAP OR BASIN BOTTOM TO THE CREST OF THE OUTLET.
20. SEDIMENT REMOVED FROM TRAPS (AND BASINS) SHALL BE PLACED AND STABILIZED IN APPROVED AREAS, BUT NOT WITHIN A FLOODPLAIN, WETLAND OR TREE–SAVE AREA. WHEN PUMPING SEDIMENT LADEN WATER, THE DISCHARGE MUST BE DIRECTED TO A SEDIMENT TRAPPING DEVICE PRIOR TO RELEASE FROM THE SITE. A SUMP PIT MAY BE USED IF SEDIMENT TRAPS THEMSELVES ARE BEING PUMPED OUT.
21. ALL WATER REMOVED FROM EXCAVATED AREAS SHALL BE PASSED THROUGH A WMA APPROVED DEWATERING PRACTICE OR PUMPED TO A SEDIMENT TRAP OR BASIN PRIOR TO DISCHARGE TO A FUNCTIONAL STORM DRAIN SYSTEM OR TO STABLE GROUND SURFACE.
22. SEDIMENT CONTROL FOR UTILITY CONSTRUCTION FOR AREAS OUTSIDE OF DESIGNED CONTROLS OR AS DIRECTED BY ENGINEER OR WMA INSPECTOR:
   A. CALL "MISS UTILITY" AT 1–800–257–7777 48 HOURS PRIOR TO THE START OF WORK.
   B. EXCAVATED TRENCH MATERIAL SHALL BE PLACED ON THE HIGH SIDE OF THE TRENCH.
   C. TRENCHES FOR UTILITY INSTALLATION SHALL BE BACKFILLED, COMPACTED, AND STABILIZED AT THE END OF EACH WORKING DAY. NO MORE TRENCH SHALL BE OPENED THAN CAN BE COMPLETED THE SAME DAY, UNLESS;
   D. TEMPORARY SILT FENCE SHALL BE PLACED IMMEDIATELY DOWNSTREAM OF ANY DISTURBED AREA INTENDED TO REMAIN DISTURBED FOR MORE THAN ONE DAY.
23. NO DISTURBED ARE SHALL BE LEFT UNSTABILIZED OVERNIGHT UNLESS THE RUNOFF IS DIRECTED TO AN MDE APPROVED SEDIMENT CONTROL DEVICE
24. WHERE DEEMED APPROPRIATE BY THE ENGINEER OR INSPECTOR, SEDIMENT BASINS AND TRAPS MAY NEED TO BE SURROUNDED WITH AN APPROVED SAFETY FENCE. THE FENCE MUST CONFORM TO LOCAL ORDINANCES AND REGULATIONS. THE DEVELOPER OR OWNER SHALL CHECK WITH LOCAL BUILDING OFFICIALS ON APPLICABLE SAFETY REQUIREMENTS. WHERE SAFETY FENCE IS DEEMED APPROPRIATE AND LOCAL ORDINANCES DO NOT SPECIFY FENCING SIZES AND TYPES, THE FOLLOWING SHALL BE USED AS A MINIMUM STANDARD: THE SAFETY FENCE MUST BE MADE OF WELDED WIRE AND AT LEAST 42 INCHES HIGH, HAVE POSTS SPACED NO FARTHER APART THAN 8 FEET, HAVE MESH OPENINGS NO GREATER THAN 2 INCHES IN WIDTH AND 4 INCHES IN HEIGHT WITH A MINIMUM OF 14 GAUGE WIRE. SAFETY FENCE MUST BE MAINTAINED AND IN GOOD CONDITION AT ALL TIMES.
25. OFF–SITE SPOIL OR BORROW AREAS ON STATE OR FEDERAL PROPERTY MUST HAVE PRIOR APPROVAL BY WMA AND OTHER APPLICABLE STATE, FEDERAL, AND LOCAL AGENCIES; OTHERWISE APPROVAL MUST BE GRANTED BY THE LOCAL AUTHORITIES. ALL WASTE AND BORROW AREAS OFF–SITE MUST BE PROTECTED BY SEDIMENT CONTROL MEASURES AND STABILIZED.
26. SITES WHERE INFILTRATION DEVICES ARE USED FOR THE CONTROL OF STORMWATER, EXTREME CARE MUST BE TAKEN TO PREVENT RUNOFF FROM UNSTABILIZED AREAS FROM ENTERING THE STRUCTURE DURING CONSTRUCTION. SEDIMENT CONTROL DEVICES PLACED IN INFILTRATION AREAS MUST HAVE BOTTOM ELEVATIONS AT LEAST TWO (2) FEET HIGHER THAN THE FINISH GRADE BOTTOM ELEVATION OF THE INFILTRATION PRACTICE. WHEN CONVERTING A SEDIMENT TRAP TO AN INFILTRATION DEVICE, ALL ACCUMULATED SEDIMENT MUST BE REMOVED AND DISPOSED OF PRIOR TO FINAL GRADING OF INFILTRATION DEVICE.
27. WHEN A STORM DRAIN SYSTEM OUTFALL IS DIRECTED TO A SEDIMENT TRAP OR SEDIMENT BASIN AND THE SYSTEM IS TO BE USED FOR TEMPORARILY CONVEYING SEDIMENT LADEN WATER, ALL STORM DRAIN INLETS IN NON–SUMP AREAS SHALL HAVE TEMPORARY ASPHALT BERMS CONSTRUCTED AT THE TIME OF BASE PAVING TO DIRECT GUTTER FLOW INTO THE INLETS TO AVOID SURCHARGING AND OVERFLOW OF INLETS IN SUMP AREAS.
28. SITE INFORMATION:

a. TOTAL AREA OF FACILITIES:	1.53 ACRES
b. AREA DISTURBED:	0.74 ACRES
c. AREA TO BE ROOFED OR PAVED:	0.22 ACRES
d. TOTAL CUT:	101 CUBIC YARDS
e. TOTAL FILL	101 CUBIC YARDS
f. OFF–SITE WASTE/BORROW AREA LOCATION:	TBD

*NOTES:

1. CUT/ FILL TOTALS ARE FOR REVIEW ONLY. CONTRACTOR IS RESPONSIBLE FOR CALCULATING CUT/ FILL QUANTITIES FOR ESTIMATION PURPOSES. ENGINEER OFFERS NO GUARANTEE TO QUANTITIES ACTUALLY ENCOUNTERED DURING CONSTRUCTION.
2. AREA DISTURBED IS NEGLIGIBLY DIFFERENT THAN THAT USED FOR SWM CALCULATIONS DUE TO LINEAR UTILITY INSTALLATION.

B–3 STANDARDS AND SPECIFICATIONS FOR LAND GRADING

DEFINITION

RESHAPING THE EXISTING LAND SURFACE TO PROVIDE SUITABLE TOPOGRAPHY FOR BUILDING FACILITIES AND OTHER SITE IMPROVEMENTS.

PURPOSE

TO PROVIDE EROSION CONTROL AND VEGETATIVE ESTABLISHMENT FOR EXTREME CHANGES IN GRADE.

CONDITIONS WHERE PRACTICE APPLIES

EARTH DISTURBANCES OR EXTREME GRADE MODIFICATIONS ON STEEP OR LONG SLOPES.

DESIGN CRITERIA

THE GRADING PLAN SHOULD BE BASED ON THE INCORPORATION OF BUILDING DESIGNS AND STREET LAYOUTS THAT FIT AND UTILIZE EXISTING TOPOGRAPHY AND DESIRABLE NATURAL SURROUNDINGS TO AVOID EXTREME GRADE MODIFICATIONS. INFORMATION SUBMITTED MUST PROVIDE SUFFICIENT TOPOGRAPHIC SURVEYS AND SOIL INVESTIGATIONS TO DETERMINE LIMITATIONS THAT MUST BE IMPOSED ON THE GRADING OPERATION RELATED TO SLOPE STABILITY, ADJACENT PROPERTIES, DRAINAGE PATTERNS, MEASURES FOR WATER REMOVAL, AND VEGETATIVE TREATMENT, ETC.

MANY JURISDICTIONS HAVE REGULATIONS AND DESIGN PROCEDURES ALREADY ESTABLISHED FOR LAND GRADING THAT MUST BE FOLLOWED. THE PLAN MUST SHOW EXISTING AND PROPOSED CONTOURS FOR THE AREA(S) TO BE GRADED INCLUDING PRACTICES FOR EROSION CONTROL, SLOPE STABILIZATION, AND SAFE CONVEYANCE OF RUNOFF (E.G., WATERWAYS, LINED CHANNELS, REVERSE BENCHES, GRADE STABILIZATION STRUCTURES). THE GRADING/CONSTRUCTION PLANS ARE TO INCLUDE THE PHASING OF THESE PRACTICES AND CONSIDERATION OF THE FOLLOWING:

1. PROVISIONS TO SAFELY CONVEY SURFACE RUNOFF TO STORM DRAINS, PROTECTED OUTLETS OR STABLE WATER COURSES TO ENSURE THAT SURFACE RUNOFF WILL NOT DAMAGE SLOPES OR OTHER GRADED AREAS.
2. CUT AND FILL SLOPES, STABILIZED WITH GRASSES, NO STEEPER THAN 2:L. (WHERE THE SLOPE IS TO BE MOWED, THE SLOPE SHOULD BE NO STEEPER THAN 3:L, BUT 4:L IS PREFERRED BECAUSE OF SAFETY FACTORS RELATED TO MOWING STEEP SLOPES.) SLOPES STEEPER THAN 2:L REQUIRE SPECIAL DESIGN AND STABILIZATION CONSIDERATIONS TO BE SHOWN ON THE PLANS.
3. BENCHING PER DETAIL B–3–1 WHENEVER THE VERTICAL INTERVAL (HEIGHT) OF ANY 2:L SLOPE EXCEEDS 20 FEET; FOR 3:L SLOPES, WHEN IT EXCEEDS 30 FEET; AND FOR 4:L SLOPES, WHEN IF EXCEEDS 40 FEET. LOCATE BENCHES TO DIVIDE THE SLOPE FACE AS EQUALLY AS POSSIBLE AND TO CONVEY THE WATER TO A STABLE OUTLET. SOILS, SEEPS, ROCK OUTCROPS, ETC. ARE TO BE TAKEN INTO CONSIDERATION WHEN DESIGNING BENCHES.
   A. PROVIDE BENCHES WITH A MINIMUM WIDTH OF SIX FEET FOR EASE OF MAINTENANCE.
   B. DESIGN BENCHES WITH A REVERSE SLOPE OF 6:L OR FLATTER TO THE TOE OF THE UPPER SLOPE AND WITH A MINIMUM OF ONE FOOT IN DEPTH. GRADE THE LONGITUDINAL SLOPE OF THE BENCH BETWEEN 2 PERCENT AND 3 PERCENT, UNLESS ACCOMPANIED BY APPROPRIATE DESIGN AND COMPUTATIONS.
   C. THE MAXIMUM ALLOWABLE FLOW LENGTH WITHIN A BENCH IS 800 FEET UNLESS ACCOMPANIED BY APPROPRIATE DESIGN AND COMPUTATIONS.
4. DIVERSION OF SURFACE WATER FROM THE FACE OF ALL CUT AND FILL SLOPES USING EARTH DIKES OR SWALES. CONVEY SURFACE WATER DOWN SLOPE USING A DESIGNED STRUCTURE, AND:
   A. PROTECT THE FACE OF ALL GRADED SLOPES FROM SURFACE RUNOFF UNTIL THEY ARE STABILIZED.
   B. DO NOT SUBJECT THE SLOPE'S FACE TO ANY CONCENTRATED FLOW OF SURFACE WATER SUCH AS FROM NATURAL DRAINAGE WAYS, GRADED SWALES, DOWNSPOUTS, ETC.
   C. PROTECT THE FACE OF THE SLOPE BY SPECIAL EROSION CONTROL MATERIALS TO INCLUDE, BUT NOT BE LIMITED TO, APPROVED VEGETATIVE STABILIZATION PRACTICES, RIPRAP OR OTHER APPROVED STABILIZATION METHODS.
5. SERRATED SLOPE AS SHOWN IN DETAIL B–3–2. THE STEEPEST ALLOWABLE SLOPE FOR RIPABLE ROCK IS 1.5:1. FOR NON ROCK SURFACES, THE SLOPES ARE TO BE 2:1 OR FLATTER. THESE STEPS WILL WEATHER AND ACT TO HOLD MOISTURE, LIME, FERTILIZER AND SEED THUS PRODUCING A MUCH QUICKER AND LONGER LIVED VEGETATIVE COVER AND BETTER SLOPE STABILIZATION.
6. SUBSURFACE DRAINAGE PROVISIONS. PROVIDE SUBSURFACE DRAINAGE WHERE NECESSARY TO INTERCEPT SEEPAGE THAT WOULD OTHERWISE ADVERSELY AFFECT SLOPE STABILITY OR CREATE EXCESSIVELY WET SITE CONDITIONS.
7. PROXIMITY TO ADJACENT PROPERTY. SLOPES MUST NOT BE CREATED CLOSE TO PROPERTY LINES WITHOUT ADEQUATE PROTECTION AGAINST SEDIMENTATION, EROSION, SLIPPAGE, SETTLEMENT, SUBSIDENCE, OR OTHER RELATED DAMAGES.
8. QUALITY OF FILL MATERIAL. FILL MATERIAL MUST BE FREE OF BRUSH, RUBBISH, LOGS, STUMPS, BUILDING DEBRIS, AND OTHER OBJECTIONABLE MATERIAL. DO NOT PLACE FROZEN MATERIALS IN THE FILL NOR PLACE THE FILL MATERIAL ON A FROZEN FOUNDATION.
9. STABILIZATION. STABILIZE ALL DISTURBED AREAS STRUCTURALLY OR VEGETATIVELY IN COMPLIANCE WITH SECTION B4 STANDARDS AND SPECIFICATIONS FOR STABILIZATION PRACTICES.

MAINTENANCE

THE LINE, GRADE, AND CROSS SECTION OF BENCHING AND SERRATED SLOPES MUST BE MAINTAINED. BENCHES AND SERRATED SLOPES MUST CONTINUOUSLY MEET THE REQUIREMENTS FOR ADEQUATE VEGETATIVE ESTABLISHMENT IN ACCORDANCE WITH SECTION B–4 VEGETATIVE STABILIZATION.

B–4 STANDARDS AND SPECIFICATIONS FOR VEGETATIVE STABILIZATION

DEFINITION

USING VEGETATION AS COVER TO PROTECT EXPOSED SOIL FROM EROSION.

PURPOSE

TO PROMOTE THE ESTABLISHMENT OF VEGETATION ON EXPOSED SOIL.

CONDITIONS WHERE PRACTICE APPLIES

ON ALL DISTURBED AREAS NOT STABILIZED BY OTHER METHODS. THIS SPECIFICATION IS DIVIDED INTO SECTIONS ON INCREMENTAL STABILIZATION; SOIL PREPARATION, SOIL AMENDMENTS AND TOPSOILING; SEEDING AND MULCHING; TEMPORARY STABILIZATION; AND PERMANENT STABILIZATION.

EFFECTS ON WATER QUALITY AND QUANTITY

STABILIZATION PRACTICES ARE USED TO PROMOTE THE ESTABLISHMENT OF VEGETATION ON EXPOSED SOIL. WHEN SOIL IS STABILIZED WITH VEGETATION, THE SOIL IS LESS LIKELY TO ERODE AND MORE LIKELY TO ALLOW INFILTRATION OF RAINFALL, THEREBY REDUCING SEDIMENT LOADS AND RUNOFF TO DOWNSTREAM AREAS.

PLANTING VEGETATION IN DISTURBED AREAS WILL HAVE AN EFFECT ON THE WATER BUDGET, ESPECIALLY ON VOLUMES AND RATES OF RUNOFF, INFILTRATION, EVAPORATION, TRANSPIRATION, PERCOLATION, AND GROUNDWATER RECHARGE. OVER TIME, VEGETATION WILL INCREASE ORGANIC MATTER CONTENT AND IMPROVE THE WATER HOLDING CAPACITY OF THE SOIL AND SUBSEQUENT PLANT GROWTH.

VEGETATION WILL HELP REDUCE THE MOVEMENT OF SEDIMENT, NUTRIENTS, AND OTHER CHEMICALS CARRIED BY RUNOFF TO RECEIVING WATERS. PLANTS WILL ALSO HELP PROTECT GROUNDWATER SUPPLIES BY ASSIMILATING THOSE SUBSTANCES PRESENT WITHIN THE ROOT ZONE.

SEDIMENT CONTROL PRACTICES MUST REMAIN IN PLACE DURING GRADING, SEEDBED PREPARATION, SEEDING, MULCHING, AND VEGETATIVE ESTABLISHMENT.

ADEQUATE VEGETATIVE ESTABLISHMENT

INSPECT SEEDED AREAS FOR VEGETATIVE ESTABLISHMENT AND MAKE NECESSARY REPAIRS, REPLACEMENTS, AND RESEEDINGS WITHIN THE PLANTING SEASON.

1. ADEQUATE VEGETATIVE STABILIZATION REQUIRES 95 PERCENT GROUNDCOVER.
2. IF AN AREA HAS LESS THAN 40 PERCENT GROUNDCOVER, RESTABILIZE FOLLOWING THE ORIGINAL RECOMMENDATIONS FOR LIME, FERTILIZER, SEEDBED PREPARATION, AND SEEDING.
3. IF AN AREA HAS BETWEEN 40 AND 94 PERCENT GROUNDCOVER, OVER–SEED AND FERTILIZE USING HALF OF THE RATES ORIGINALLY SPECIFIED.
4. MAINTENANCE FERTILIZER RATES FOR PERMANENT SEEDING ARE SHOWN IN TABLE B.6.

CITY OF BALTIMORE	REVISION – CITY OF BALTIMORE
CHIEF, OFFICE OF ENGINEERING AND CONSTRUCTION DATE	CHIEF, FACILITIES ENGINEERING SECTION DATE

SEAL: STATE OF MARYLAND – JUDITH A. CARROLL – No. 14446 – PROFESSIONAL ENGINEER

DATE : 9/17/2020

PROFESSIONAL CERTIFICATION

I HEREBY CERTIFY THAT THESE DOCUMENTS WERE PREPARED OR APPROVED BY ME, AND THAT I AM A DULY LICENSED PROFESSIONAL ENGINEER UNDER THE LAWS OF THE STATE OF MARYLAND.
LICENSE NO. 14446, EXPIRATION DATE 05/25/2021

ENGINEER: CARROLL ENGINEERING
215 SCHILLING CIR. SUITE 102
HUNT VALLEY, MD 21031

AS–BUILT PER RECORD PRINT
BY:
DATE:

DESIGN BY: GHT
DRAWN BY: GHT
CHKD BY: CMS

REVISION	BY	DATE
CONTRACT COMPLETION BOX		

P.W.A. NO.	KEY SHEET	POSITION SHT
–	V–NE DD–SE	77 NW 5,6 82 NW 5,6
R.O.W NO.		
–		

DRAWING SCALE	
PLAN SCALE:	AS SHOWN
PROFILE SCALE:	N/A
	N/A

DEPARTMENT OF PUBLIC WORKS

SEE DRAWING 2020–0428 FOR ORIGINAL SIGNATURES

BUREAU OF ENGINEERING AND CONSTRUCTION	HIGHWAYS	STRUCTURES	STORM DRAINS	SEWER	WATER	FIELD ENGINEER	BUR. OF ENGINEERING & CONSTRUCTION
SEE DRAWING 2020–0428 FOR ORIGINAL SIGNATURES							

CONTRACT COMPLETION BOX
CONTRACTOR:
DATE COMPLETED:
INSPECTOR:
PIPE MATERIAL (Pressure Only)

DWG. FILENAME:

BALTIMORE COUNTY DEPARTMENT OF PUBLIC WORKS BUREAU OF ENGINEERING & CONSTRUCTION

SPARKS PUMPING STATION

EROSION AND SEDIMENT CONTROL NOTES

SPARKS WATER PUMPING STATION AND ELEVATED WATER STORAGE TANK IMPROVEMENTS

SUBDIVISION: SPARKS, MD ELECTION DIST. NO.: 8C3

SHEET DESIGNATION	CONTRACT NUMBER
C–11	20094WXO
JOB ORDER NUMBER	
231–203–0035–0514	
SHEET 14 OF 71	
DRAWING NUMBER	
2020–0441	
FILE NO.:	REV. NO.

B-4-1 STANDARDS AND SPECIFICATIONS FOR INCREMENTAL STABILIZATION

DEFINITION

ESTABLISHMENT OF VEGETATIVE COVER ON CUT AND FILL SLOPES.

PURPOSE

TO PROVIDE TIMELY VEGETATIVE COVER ON CUT AND FILL SLOPES AS WORK PROGRESSES.

CONDITIONS WHERE PRACTICE APPLIES

ANY CUT OR FILL SLOPE GREATER THAN 15 FEET IN HEIGHT. THIS PRACTICE ALSO APPLIES TO STOCKPILES.

CRITERIA

A. INCREMENTAL STABILIZATION – CUT SLOPES
1. EXCAVATE AND STABILIZE CUT SLOPES IN INCREMENTS NOT TO EXCEED 15 FEET IN HEIGHT. PREPARE SEEDBED AND APPLY SEED AND MULCH ON ALL CUT SLOPES AS THE WORK PROGRESSES.
2. CONSTRUCTION SEQUENCE EXAMPLE (REFER TO FIGURE B.1):
   A. CONSTRUCT AND STABILIZE ALL TEMPORARY SWALES OR DIKES THAT WILL BE USED TO CONVEY RUNOFF AROUND THE EXCAVATION.
   B. PERFORM PHASE 1 EXCAVATION, PREPARE SEEDBED, AND STABILIZE.
   C. PERFORM PHASE 2 EXCAVATION, PREPARE SEEDBED, AND STABILIZE. OVERSEED PHASE 1 AREAS AS NECESSARY.
   D. PERFORM FINAL PHASE EXCAVATION, PREPARE SEEDBED, AND STABILIZE. OVERSEED PREVIOUSLY SEEDED AREAS AS NECESSARY.

NOTE: ONCE EXCAVATION HAS BEGUN THE OPERATION SHOULD BE CONTINUOUS FROM GRUBBING THROUGH THE COMPLETION OF GRADING AND PLACEMENT OF TOPSOIL (IF REQUIRED) AND PERMANENT SEED AND MULCH. ANY INTERRUPTIONS IN THE OPERATION OR COMPLETING THE OPERATION OUT OF THE SEEDING SEASON WILL NECESSITATE THE APPLICATION OF TEMPORARY STABILIZATION.

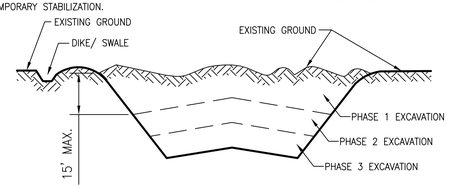

FIGURE B.1: INCREMENTAL STABILIZATION – CUT

B. INCREMENTAL STABILIZATION – FILL SLOPES
1. CONSTRUCT AND STABILIZE FILL SLOPES IN INCREMENTS NOT TO EXCEED 15 FEET IN HEIGHT. PREPARE SEEDBED AND APPLY SEED AND MULCH ON ALL SLOPES AS THE WORK PROGRESSES.
2. STABILIZE SLOPES IMMEDIATELY WHEN THE VERTICAL HEIGHT OF A LIFT REACHES 15 FEET, OR WHEN THE GRADING OPERATION CEASES AS PRESCRIBED IN THE PLANS.
3. AT THE END OF EACH DAY, INSTALL TEMPORARY WATER CONVEYANCE PRACTICE(S), AS NECESSARY, TO INTERCEPT SURFACE RUNOFF AND CONVEY IT DOWN THE SLOPE IN A NON-EROSIVE MANNER.
4. CONSTRUCTION SEQUENCE EXAMPLE (REFER TO FIGURE B.2):
   A. CONSTRUCT AND STABILIZE ALL TEMPORARY SWALES OR DIKES THAT WILL BE USED TO DIVERT RUNOFF AROUND THE FILL. CONSTRUCT SILT FENCE ON LOW SIDE OF FILL UNLESS OTHER METHODS SHOWN ON THE PLANS ADDRESS THIS AREA.
   B. AT THE END OF EACH DAY, INSTALL TEMPORARY WATER CONVEYANCE PRACTICE(S), AS NECESSARY, TO INTERCEPT SURFACE RUNOFF AND CONVEY IT DOWN THE SLOPE IN A NON-EROSIVE MANNER.
   C. PLACE PHASE 1 FILL, PREPARE SEEDBED, AND STABILIZE.
   D. PLACE PHASE 2 FILL, PREPARE SEEDBED, AND STABILIZE.
   E. PLACE FINAL PHASE FILL, PREPARE SEEDBED, AND STABILIZE. OVERSEED PREVIOUSLY SEEDED AREAS AS NECESSARY.

NOTE: ONCE THE PLACEMENT OF FILL HAS BEGUN THE OPERATION SHOULD BE CONTINUOUS FROM GRUBBING THROUGH THE COMPLETION OF GRADING AND PLACEMENT OF TOPSOIL (IF REQUIRED) AND PERMANENT SEED AND MULCH. ANY INTERRUPTIONS IN THE OPERATION OR COMPLETING THE OPERATION OUT OF THE SEEDING SEASON WILL NECESSITATE THE APPLICATION OF TEMPORARY STABILIZATION.

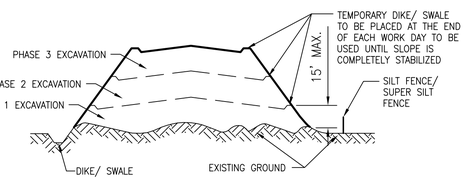

FIGURE B.2: INCREMENTAL STABILIZATION – FILL

B-4-2 STANDARDS AND SPECIFICATIONS FOR SOIL PREPARATION, TOPSOILING, AND SOIL AMENDMENTS

DEFINITION

THE PROCESS OF PREPARING THE SOILS TO SUSTAIN ADEQUATE VEGETATIVE STABILIZATION.

PURPOSE

TO PROVIDE A SUITABLE SOIL MEDIUM FOR VEGETATIVE GROWTH.

CONDITIONS WHERE PRACTICE APPLIES

WHERE VEGETATIVE STABILIZATION IS TO BE ESTABLISHED.

CRITERIA

A. SOIL PREPARATION
1. TEMPORARY STABILIZATION
   A. SEEDBED PREPARATION CONSISTS OF LOOSENING SOIL TO A DEPTH OF 3 TO 5 INCHES BY MEANS OF SUITABLE AGRICULTURAL OR CONSTRUCTION EQUIPMENT, SUCH AS DISC HARROWS OR CHISEL PLOWS OR RIPPERS MOUNTED ON CONSTRUCTION EQUIPMENT. AFTER THE SOIL IS LOOSENED, IT MUST NOT BE ROLLED OR DRAGGED SMOOTH BUT LEFT IN THE ROUGHENED CONDITION. SLOPES 3:1 OR FLATTER ARE TO BE TRACKED WITH RIDGES RUNNING PARALLEL TO THE CONTOUR OF THE SLOPE.
   B. APPLY FERTILIZER AND LIME AS PRESCRIBED ON THE PLANS.
   C. INCORPORATE LIME AND FERTILIZER INTO THE TOP 3 TO 5 INCHES OF SOIL BY DISKING OR OTHER SUITABLE MEANS.
2. PERMANENT STABILIZATION
   A. A SOIL TEST IS REQUIRED FOR ANY EARTH DISTURBANCE OF 5 ACRES OR MORE. THE MINIMUM SOIL CONDITIONS REQUIRED FOR PERMANENT VEGETATIVE ESTABLISHMENT ARE:
      I. SOIL PH BETWEEN 6.0 AND 7.0.
      II. SOLUBLE SALTS LESS THAN 500 PARTS PER MILLION (PPM).
      III. SOIL CONTAINS LESS THAN 40 PERCENT CLAY BUT ENOUGH FINE GRAINED MATERIAL (GREATER THAN 30 PERCENT SILT PLUS CLAY) TO PROVIDE THE CAPACITY TO HOLD A MODERATE AMOUNT OF MOISTURE. AN EXCEPTION: IF LOVEGRASS WILL BE PLANTED, THEN A SANDY SOIL (LESS THAN 30 PERCENT SILT PLUS CLAY) WOULD BE ACCEPTABLE.
      IV. SOIL CONTAINS 1.5 PERCENT MINIMUM ORGANIC MATTER BY WEIGHT.
      V. SOIL CONTAINS SUFFICIENT PORE SPACE TO PERMIT ADEQUATE ROOT PENETRATION.
   B. APPLICATION OF AMENDMENTS OR TOPSOIL IS REQUIRED IF ON-SITE SOILS DO NOT MEET THE ABOVE CONDITIONS.
   C. GRADED AREAS MUST BE MAINTAINED IN A TRUE AND EVEN GRADE AS SPECIFIED ON THE APPROVED PLAN, THEN SCARIFIED OR OTHERWISE LOOSENED TO A DEPTH OF 3 TO 5 INCHES.
   D. APPLY SOIL AMENDMENTS AS SPECIFIED ON THE APPROVED PLAN OR AS INDICATED BY THE RESULTS OF A SOIL TEST.
   E. MIX SOIL AMENDMENTS INTO THE TOP 3 TO 5 INCHES OF SOIL BY DISKING OR OTHER SUITABLE MEANS. RAKE LAWN AREAS TO SMOOTH THE SURFACE, REMOVE LARGE OBJECTS LIKE STONES AND BRANCHES, AND READY THE AREA FOR SEED APPLICATION. LOOSEN SURFACE SOIL BY DRAGGING WITH A HEAVY CHAIN OR OTHER EQUIPMENT TO ROUGHEN THE SURFACE WHERE SITE CONDITIONS WILL NOT PERMIT NORMAL SEEDBED PREPARATION. TRACK SLOPES 3:1 OR FLATTER WITH TRACKED EQUIPMENT LEAVING THE SOIL IN AN IRREGULAR CONDITION WITH RIDGES RUNNING PARALLEL TO THE CONTOUR OF THE SLOPE. LEAVE THE TOP 1 TO 3 INCHES OF SOIL LOOSE AND FRIABLE. SEEDBED LOOSENING MAY BE NECESSARY ON NEWLY DISTURBED AREAS.

B. TOPSOILING
1. TOPSOIL IS PLACED OVER PREPARED SUBSOIL PRIOR TO ESTABLISHMENT OF PERMANENT VEGETATION. THE PURPOSE IS TO PROVIDE A SUITABLE SOIL MEDIUM FOR VEGETATIVE GROWTH. SOILS OF CONCERN HAVE LOW MOISTURE CONTENT, LOW NUTRIENT LEVELS, LOW PH, MATERIALS TOXIC TO PLANTS, AND/OR UNACCEPTABLE SOIL GRADATION.
2. TOPSOIL SALVAGED FROM AN EXISTING SITE MAY BE USED PROVIDED IT MEETS THE STANDARDS AS SET FORTH IN THESE SPECIFICATIONS. TYPICALLY, THE DEPTH OF TOPSOIL TO BE SALVAGED FOR A GIVEN SOIL TYPE CAN BE FOUND IN THE REPRESENTATIVE SOIL PROFILE SECTION IN THE SOIL SURVEY PUBLISHED BY USDA-NRCS.
3. TOPSOILING IS LIMITED TO AREAS HAVING 2:1 OR FLATTER SLOPES WHERE:
   A. THE TEXTURE OF THE EXPOSED SUBSOIL/PARENT MATERIAL IS NOT ADEQUATE TO PRODUCE VEGETATIVE GROWTH.
   B. THE SOIL MATERIAL IS SO SHALLOW THAT THE ROOTING ZONE IS NOT DEEP ENOUGH TO SUPPORT PLANTS OR FURNISH CONTINUING SUPPLIES OF MOISTURE AND PLANT NUTRIENTS.
   C. THE ORIGINAL SOIL TO BE VEGETATED CONTAINS MATERIAL TOXIC TO PLANT GROWTH.
   D. THE SOIL IS SO ACIDIC THAT TREATMENT WITH LIMESTONE IS NOT FEASIBLE.
4. AREAS HAVING SLOPES STEEPER THAN 2:1 REQUIRE SPECIAL CONSIDERATION AND DESIGN.
5. TOPSOIL SPECIFICATIONS: SOIL TO BE USED AS TOPSOIL MUST MEET THE FOLLOWING CRITERIA:
   A. TOPSOIL MUST BE A LOAM, SANDY LOAM, CLAY LOAM, SILT LOAM, SANDY CLAY LOAM, OR LOAMY SAND. OTHER SOILS MAY BE USED IF RECOMMENDED BY AN AGRONOMIST OR SOIL SCIENTIST AND APPROVED BY THE APPROPRIATE APPROVAL AUTHORITY. TOPSOIL MUST NOT BE A MIXTURE OF CONTRASTING TEXTURED SUBSOILS AND MUST CONTAIN LESS THAN 5 PERCENT BY VOLUME OF CINDERS, STONES, SLAG, COARSE FRAGMENTS, GRAVEL, STICKS, ROOTS, TRASH, OR OTHER MATERIALS LARGER THAN 1½ INCHES IN DIAMETER.
   B. TOPSOIL MUST BE FREE OF NOXIOUS PLANTS OR PLANT PARTS SUCH AS BERMUDA GRASS, QUACK GRASS, JOHNSON GRASS, NUT SEDGE, POISON IVY, THISTLE, OR OTHERS AS SPECIFIED.
   C. TOPSOIL SUBSTITUTES OR AMENDMENTS, AS RECOMMENDED BY A QUALIFIED AGRONOMIST OR SOIL SCIENTIST AND APPROVED BY THE APPROPRIATE APPROVAL AUTHORITY, MAY BE USED IN LIEU OF NATURAL TOPSOIL.

C. SOIL AMENDMENTS (FERTILIZER AND LIME SPECIFICATIONS)
6. SOIL TESTS MUST BE PERFORMED TO DETERMINE THE EXACT RATIOS AND APPLICATION RATES FOR BOTH LIME AND FERTILIZER ON SITES HAVING DISTURBED AREAS OF 5 ACRES OR MORE. SOIL ANALYSIS MAY BE PERFORMED BY A RECOGNIZED PRIVATE OR COMMERCIAL LABORATORY. SOIL SAMPLES TAKEN FOR ENGINEERING PURPOSES MAY ALSO BE USED FOR CHEMICAL ANALYSES.
7. FERTILIZERS MUST BE UNIFORM IN COMPOSITION, FREE FLOWING AND SUITABLE FOR ACCURATE APPLICATION BY APPROPRIATE EQUIPMENT. MANURE MAY BE SUBSTITUTED FOR FERTILIZER WITH PRIOR APPROVAL FROM THE APPROPRIATE APPROVAL AUTHORITY. FERTILIZERS MUST ALL BE DELIVERED TO THE SITE FULLY LABELED ACCORDING TO THE APPLICABLE LAWS AND MUST BEAR THE NAME, TRADE NAME OR TRADEMARK AND WARRANTY OF THE PRODUCER.
8. LIME MATERIALS MUST BE GROUND LIMESTONE (HYDRATED OR BURNT LIME MAY BE SUBSTITUTED EXCEPT WHEN HYDROSEEDING) WHICH CONTAINS AT LEAST 50 PERCENT TOTAL OXIDES (CALCIUM OXIDE PLUS MAGNESIUM OXIDE). LIMESTONE MUST BE GROUND TO SUCH FINENESS THAT AT LEAST 50 PERCENT WILL PASS THROUGH A #100 MESH SIEVE AND 98 TO 100 PERCENT WILL PASS THROUGH A #20 MESH SIEVE.
9. LIME AND FERTILIZER ARE TO BE EVENLY DISTRIBUTED AND INCORPORATED INTO THE TOP 3 TO 5 INCHES OF SOIL BY DISKING OR OTHER SUITABLE MEANS.
10. WHERE THE SUBSOIL IS EITHER HIGHLY ACIDIC OR COMPOSED OF HEAVY CLAYS, SPREAD GROUND LIMESTONE AT THE RATE OF 4 TO 8 TONS/ACRE (200–400 POUNDS PER 1,000 SQUARE FEET) PRIOR TO THE PLACEMENT OF TOPSOIL.

B-4-3 STANDARDS AND SPECIFICATIONS FOR SEEDING AND MULCHING

DEFINITION

THE APPLICATION OF SEED AND MULCH TO ESTABLISH VEGETATIVE COVER.

PURPOSE

TO PROTECT DISTURBED SOILS FROM EROSION DURING AND AT THE END OF CONSTRUCTION.

CONDITIONS WHERE PRACTICE APPLIES

TO THE SURFACE OF ALL PERIMETER CONTROLS, SLOPES, AND ANY DISTURBED AREA NOT UNDER ACTIVE GRADING.

CRITERIA

A. SEEDING
1. SPECIFICATIONS
   A. ALL SEED MUST MEET THE REQUIREMENTS OF THE MARYLAND STATE SEED LAW. ALL SEED MUST BE SUBJECT TO RE-TESTING BY A RECOGNIZED SEED LABORATORY. ALL SEED USED MUST HAVE BEEN TESTED WITHIN THE 6 MONTHS IMMEDIATELY PRECEDING THE DATE OF SOWING SUCH MATERIAL ON ANY PROJECT. REFER TO TABLE B.4 REGARDING THE QUALITY OF SEED. SEED TAGS MUST BE AVAILABLE UPON REQUEST TO THE INSPECTOR TO VERIFY TYPE OF SEED AND SEEDING RATE.
   B. MULCH ALONE MAY BE APPLIED BETWEEN THE FALL AND SPRING SEEDING DATES ONLY IF THE GROUND IS FROZEN. THE APPROPRIATE SEEDING MIXTURE MUST BE APPLIED WHEN THE GROUND THAWS.
   C. INOCULANTS: THE INOCULANT FOR TREATING LEGUME SEED IN THE SEED MIXTURES MUST BE A PURE CULTURE OF NITROGEN FIXING BACTERIA PREPARED SPECIFICALLY FOR THE SPECIES. INOCULANTS MUST NOT BE USED LATER THAN THE DATE INDICATED ON THE CONTAINER. ADD FRESH INOCULANTS AS DIRECTED ON THE PACKAGE. USE FOUR TIMES THE RECOMMENDED RATE WHEN HYDROSEEDING. NOTE: IT IS VERY IMPORTANT TO KEEP INOCULANT AS COOL AS POSSIBLE UNTIL USED. TEMPERATURES ABOVE 75 TO 80 DEGREES FAHRENHEIT CAN WEAKEN BACTERIA AND MAKE THE INOCULANT LESS EFFECTIVE.
   D. SOD OR SEED MUST NOT BE PLACED ON SOIL WHICH HAS BEEN TREATED WITH SOIL STERILANTS OR CHEMICALS USED FOR WEED CONTROL UNTIL SUFFICIENT TIME HAS ELAPSED (14 DAYS MIN.) TO PERMIT DISSIPATION OF PHYTO-TOXIC MATERIALS.
2. APPLICATION
   A. DRY SEEDING: THIS INCLUDES USE OF CONVENTIONAL DROP OR BROADCAST SPREADERS.
      I. INCORPORATE SEED INTO THE SUBSOIL AT THE RATES PRESCRIBED ON TEMPORARY SEEDING TABLE B.1, PERMANENT SEEDING TABLE B.3, OR SITE-SPECIFIC SEEDING SUMMARIES.
      II. APPLY SEED IN TWO DIRECTIONS, PERPENDICULAR TO EACH OTHER. APPLY HALF THE SEEDING RATE IN EACH DIRECTION. ROLL THE SEEDED AREA WITH A WEIGHTED ROLLER TO PROVIDE GOOD SEED TO SOIL CONTACT.
   B. DRILL OR CULTIPACKER SEEDING: MECHANIZED SEEDERS THAT APPLY AND COVER SEED WITH SOIL.
      I. CULTIPACKING SEEDERS ARE REQUIRED TO BURY THE SEED IN SUCH A FASHION AS TO PROVIDE AT LEAST 1/4 INCH OF SOIL COVERING. SEEDBED MUST BE FIRM AFTER PLANTING.
      II. APPLY SEED IN TWO DIRECTIONS, PERPENDICULAR TO EACH OTHER. APPLY HALF THE SEEDING RATE IN EACH DIRECTION.
3. ANCHORING
   A. PERFORM MULCH ANCHORING IMMEDIATELY FOLLOWING APPLICATION OF MULCH TO MINIMIZE LOSS BY WIND OR WATER. THIS MAY BE DONE BY ONE OF THE FOLLOWING METHODS (LISTED BY PREFERENCE), DEPENDING UPON THE SIZE OF THE AREA AND EROSION HAZARD:
      I. A MULCH ANCHORING TOOL IS A TRACTOR DRAWN IMPLEMENT DESIGNED TO PUNCH AND ANCHOR MULCH INTO THE SOIL SURFACE A MINIMUM OF 2 INCHES. THIS PRACTICE IS MOST EFFECTIVE ON LARGE AREAS, BUT IS LIMITED TO FLATTER SLOPES WHERE EQUIPMENT CAN OPERATE SAFELY. IF USED ON SLOPING LAND, THIS PRACTICE SHOULD FOLLOW THE CONTOUR.
      II. WOOD CELLULOSE FIBER MAY BE USED FOR ANCHORING STRAW. APPLY THE FIBER BINDER AT A NET DRY WEIGHT OF 750 POUNDS PER ACRE. MIX THE WOOD CELLULOSE FIBER WITH WATER AT A MAXIMUM OF 50 POUNDS OF WOOD CELLULOSE FIBER PER 100 GALLONS OF WATER.
      III. SYNTHETIC BINDERS SUCH AS ACRYLIC DLR (AGRO-TACK), DCA-70, PETROSET, TERRA TAX II, TERRA TACK AR OR OTHER APPROVED EQUAL MAY BE USED. FOLLOW APPLICATION RATES AS SPECIFIED BY THE MANUFACTURER. APPLICATION OF LIQUID BINDERS NEEDS TO BE HEAVIER AT THE EDGES WHERE WIND CATCHES MULCH, SUCH AS IN VALLEYS AND ON CRESTS OF BANKS. USE OF ASPHALT BINDERS IS STRICTLY PROHIBITED.
      IV. LIGHTWEIGHT PLASTIC NETTING MAY BE STAPLED OVER THE MULCH ACCORDING TO MANUFACTURER RECOMMENDATIONS. NETTING IS USUALLY AVAILABLE IN ROLLS 4 TO 15 FEET WIDE AND 300 TO 3,000 FEET LONG.

CITY OF BALTIMORE	REVISION – CITY OF BALTIMORE
CHIEF, OFFICE OF ENGINEERING AND CONSTRUCTION — DATE	CHIEF, FACILITIES ENGINEERING SECTION — DATE

SEAL: STATE OF MARYLAND — JUDITH A. CARROLL — No. 14446 — PROFESSIONAL ENGINEER

DATE : 9/17/2020

PROFESSIONAL CERTIFICATION
I HEREBY CERTIFY THAT THESE DOCUMENTS WERE PREPARED OR APPROVED BY ME, AND THAT I AM A DULY LICENSED PROFESSIONAL ENGINEER UNDER THE LAWS OF THE STATE OF MARYLAND.
LICENSE NO. 14446, EXPIRATION DATE 05/25/2021

ENGINEER: CARROLL ENGINEERING
215 SCHILLING CIR. SUITE 102
HUNT VALLEY, MD 21031

AS-BUILT PER RECORD PRINT
BY:
DATE:

DESIGN BY: GHT
DRAWN BY: GHT
CHKD BY: CMS

REVISION	BY	DATE
CONTRACT COMPLETION BOX		

P.W.A. NO.	KEY SHEET	POSITION SHT
–	V-NE DD-SE	77 NW 5,6 82 NW 5,6
R.O.W NO.		
–		

DRAWING SCALE: PLAN SCALE: AS SHOWN; PROFILE SCALE: N/A; N/A

DEPARTMENT OF PUBLIC WORKS: SEE DRAWING 2020-0428 FOR ORIGINAL SIGNATURES

BUREAU OF ENGINEERING AND CONSTRUCTION	HIGHWAYS	STRUCTURES	STORM DRAINS	SEWER	WATER	FIELD ENGINEER	BUR. OF ENGINEERING & CONSTRUCTION
SEE DRAWING 2020-0428 FOR ORIGINAL SIGNATURES							

BALTIMORE COUNTY DEPARTMENT OF PUBLIC WORKS BUREAU OF ENGINEERING & CONSTRUCTION

SPARKS PUMPING STATION

EROSION AND SEDIMENT CONTROL NOTES

SPARKS WATER PUMPING STATION AND ELEVATED WATER STORAGE TANK IMPROVEMENTS

SUBDIVISION: SPARKS, MD ELECTION DIST. NO.: 8C3

CONTRACT COMPLETION BOX
CONTRACTOR:
DATE COMPLETED:
INSPECTOR:
PIPE MATERIAL (Pressure Only)

DWG. FILENAME:

SHEET DESIGNATION	CONTRACT NUMBER
C-12	20094WXO
	JOB ORDER NUMBER
	231-203-0035-0514
	SHEET 15 OF 71
	DRAWING NUMBER
	2020-0442
	FILE NO.: REV. 02/17

BALTIMORE COUNTY MARYLAND

B-4-4 STANDARDS AND SPECIFICATIONS
FOR
TEMPORARY STABILIZATION

DEFINITION

TO STABILIZE DISTURBED SOILS WITH VEGETATION FOR UP TO 6 MONTHS.

PURPOSE

TO USE FAST GROWING VEGETATION THAT PROVIDES COVER ON DISTURBED SOILS.

CONDITIONS WHERE PRACTICE APPLIES

EXPOSED SOILS WHERE GROUND COVER IS NEEDED FOR A PERIOD OF 6 MONTHS OR LESS. FOR LONGER DURATION OF TIME, PERMANENT STABILIZATION PRACTICES ARE REQUIRED.

CRITERIA

1. SELECT ONE OR MORE OF THE SPECIES OR SEED MIXTURES LISTED IN TABLE B.1 FOR THE APPROPRIATE PLANT HARDINESS ZONE (FROM FIGURE B.3), AND ENTER THEM IN THE TEMPORARY SEEDING SUMMARY BELOW ALONG WITH APPLICATION RATES, SEEDING DATES AND SEEDING DEPTHS. IF THIS SUMMARY IS NOT PUT ON THE PLAN AND COMPLETED, THEN TABLE B.1 PLUS FERTILIZER AND LIME RATES MUST BE PUT ON THE PLAN.
2. FOR SITES HAVING SOIL TESTS PERFORMED, USE AND SHOW THE RECOMMENDED RATES BY THE TESTING AGENCY. SOIL TESTS ARE NOT REQUIRED FOR TEMPORARY SEEDING.
3. WHEN STABILIZATION IS REQUIRED OUTSIDE OF A SEEDING SEASON, APPLY SEED AND MULCH OR STRAW MULCH ALONE AS PRESCRIBED IN SECTION B-4-3.A.1.B AND MAINTAIN UNTIL THE NEXT SEEDING SEASON.

TEMPORARY SEEDING SUMMARY

HARDINESS ZONE (FROM FIGURE B.3): 7A SEED MIXTURE (FROM TABLE B.1): ____________					FERTILIZER RATE (10-20-20)	LIME RATE
NO.	SPECIES	APPLICATION RATE (LB/AC)	SEEDING DATES	SEEDING DEPTHS		
	ANNUAL RYEGRASS	40	FEB 15 TO APR 30; AUG 15 TO NOV 30	0.5	436 LB/AC (10 LB/1000SF)	2 TONS/AC (90 LB/1000SF)
	BARLEY	96	FEB 15 TO APR 30; AUG 15 TO NOV 30	1.0		
	FOXTAIL MILLET	30	MAY 1 TO AUG 14	0.5		

B-4-5 STANDARDS AND SPECIFICATIONS
FOR
PERMANENT STABILIZATION

DEFINITION

TO STABILIZE DISTURBED SOILS WITH PERMANENT VEGETATION.

PURPOSE

TO USE LONG-LIVED PERENNIAL GRASSES AND LEGUMES TO ESTABLISH PERMANENT GROUND COVER ON DISTURBED SOILS.

CONDITIONS WHERE PRACTICE APPLIES

EXPOSED SOILS WHERE GROUND COVER IS NEEDED FOR 6 MONTHS OR MORE.

CRITERIA

A. SEED MIXTURES
1. GENERAL USE
A. SELECT ONE OR MORE OF THE SPECIES OR MIXTURES LISTED IN TABLE B.3 FOR THE APPROPRIATE PLANT HARDINESS ZONE (FROM FIGURE B.3) AND BASED ON THE SITE CONDITION OR PURPOSE FOUND ON TABLE B.2. ENTER SELECTED MIXTURE(S), APPLICATION RATES, AND SEEDING DATES IN THE PERMANENT SEEDING SUMMARY. THE SUMMARY IS TO BE PLACED ON THE PLAN.
B. ADDITIONAL PLANTING SPECIFICATIONS FOR EXCEPTIONAL SITES SUCH AS SHORELINES, STREAM BANKS, OR DUNES OR FOR SPECIAL PURPOSES SUCH AS WILDLIFE OR AESTHETIC TREATMENT MAY BE FOUND IN USDA-NRCS TECHNICAL FIELD OFFICE GUIDE, SECTION 342 - CRITICAL AREA PLANTING.
C. FOR SITES HAVING DISTURBED AREA OVER 5 ACRES, USE AND SHOW THE RATES RECOMMENDED BY THE SOIL TESTING AGENCY.
D. FOR AREAS RECEIVING LOW MAINTENANCE, APPLY UREA FORM FERTILIZER (46-0-0) AT 3 ½ POUNDS PER 1000 SQUARE FEET (150 POUNDS PER ACRE) AT THE TIME OF SEEDING IN ADDITION TO THE SOIL AMENDMENTS SHOWN IN THE PERMANENT SEEDING SUMMARY.
2. TURFGRASS MIXTURES
A. AREAS WHERE TURFGRASS MAY BE DESIRED INCLUDE LAWNS, PARKS, PLAYGROUNDS, AND COMMERCIAL SITES WHICH WILL RECEIVE A MEDIUM TO HIGH LEVEL OF MAINTENANCE.
B. SELECT ONE OR MORE OF THE SPECIES OR MIXTURES LISTED BELOW BASED ON THE SITE CONDITIONS OR PURPOSE. ENTER SELECTED MIXTURE(S), APPLICATION RATES, AND SEEDING DATES IN THE PERMANENT SEEDING SUMMARY. THE SUMMARY IS TO BE PLACED ON THE PLAN.
I. KENTUCKY BLUEGRASS: FULL SUN MIXTURE: FOR USE IN AREAS THAT RECEIVE INTENSIVE MANAGEMENT. IRRIGATION REQUIRED IN THE AREAS OF CENTRAL MARYLAND AND EASTERN SHORE. RECOMMENDED CERTIFIED KENTUCKY BLUEGRASS CULTIVARS SEEDING RATE: 1.5 TO 2.0 POUNDS PER 1000 SQUARE FEET. CHOOSE A MINIMUM OF THREE KENTUCKY BLUEGRASS CULTIVARS WITH EACH RANGING FROM 10 TO 35 PERCENT OF THE TOTAL MIXTURE BY WEIGHT.
II. KENTUCKY BLUEGRASS/PERENNIAL RYE: FULL SUN MIXTURE: FOR USE IN FULL SUN AREAS WHERE RAPID ESTABLISHMENT IS NECESSARY AND WHEN TURF WILL RECEIVE MEDIUM TO INTENSIVE MANAGEMENT. CERTIFIED PERENNIAL RYEGRASS CULTIVARS/CERTIFIED KENTUCKY BLUEGRASS SEEDING RATE: 2 POUNDS MIXTURE PER 1000 SQUARE FEET. CHOOSE A MINIMUM OF THREE KENTUCKY BLUEGRASS CULTIVARS WITH EACH RANGING FROM 10 TO 35 PERCENT OF THE TOTAL MIXTURE BY WEIGHT.
III. TALL FESCUE/KENTUCKY BLUEGRASS: FULL SUN MIXTURE: FOR USE IN DROUGHT PRONE AREAS AND/OR FOR AREAS RECEIVING LOW TO MEDIUM MANAGEMENT IN FULL SUN TO MEDIUM SHADE. RECOMMENDED MIXTURE INCLUDES; CERTIFIED TALL FESCUE CULTIVARS 95 TO 100 PERCENT, CERTIFIED KENTUCKY BLUEGRASS CULTIVARS 0 TO 5 PERCENT. SEEDING RATE: 5 TO 8 POUNDS PER 1000 SQUARE FEET. ONE OR MORE CULTIVARS MAY BE BLENDED.
IV. KENTUCKY BLUEGRASS/FINE FESCUE: SHADE MIXTURE: FOR USE IN AREAS WITH SHADE IN BLUEGRASS LAWNS. FOR ESTABLISHMENT IN HIGH QUALITY, INTENSIVELY MANAGED TURF AREA. MIXTURE INCLUDES; CERTIFIED KENTUCKY BLUEGRASS CULTIVARS 30 TO 40 PERCENT AND CERTIFIED FINE FESCUE AND 60 TO 70 PERCENT. SEEDING RATE: 1½ TO 3 POUNDS PER 1000 SQUARE FEET.

NOTES:
SELECT TURFGRASS VARIETIES FROM THOSE LISTED IN THE MOST CURRENT UNIVERSITY OF MARYLAND PUBLICATION, AGRONOMY MEMO #77, "TURFGRASS CULTIVAR RECOMMENDATIONS FOR MARYLAND"

CHOOSE CERTIFIED MATERIAL. CERTIFIED MATERIAL IS THE BEST GUARANTEE OF CULTIVAR PURITY. THE CERTIFICATION PROGRAM OF THE MARYLAND DEPARTMENT OF AGRICULTURE, TURF AND SEED SECTION, PROVIDES A RELIABLE MEANS OF CONSUMER PROTECTION AND ASSURES A PURE GENETIC LINE

C. IDEAL TIMES OF SEEDING FOR TURF GRASS MIXTURES
WESTERN MD: MARCH 1 TO JUNE 1, AUGUST 1 TO OCTOBER 1 (HARDINESS ZONE: 5B, 6A)
CENTRAL MD: MARCH 1 TO MAY 15, AUGUST 15 TO OCTOBER 15 (HARDINESS ZONE: 6B)
SOUTHERN MD, EASTERN SHORE: MARCH 1 TO MAY 15, AUGUST 15 TO OCTOBER 15 (HARDINESS ZONE: 7A, 7B)
D. TILL AREAS TO RECEIVE SEED BY DISKING OR OTHER APPROVED METHODS TO A DEPTH OF 2 TO 4 INCHES, LEVEL AND RAKE THE AREAS TO PREPARE A PROPER SEEDBED. REMOVE STONES AND DEBRIS OVER 1½ INCHES IN DIAMETER. THE RESULTING SEEDBED MUST BE IN SUCH CONDITION THAT FUTURE MOWING OF GRASSES WILL POSE NO DIFFICULTY.
E. IF SOIL MOISTURE IS DEFICIENT, SUPPLY NEW SEEDINGS WITH ADEQUATE WATER FOR PLANT GROWTH (½ TO 1 INCH EVERY 3 TO 4 DAYS DEPENDING ON SOIL TEXTURE) UNTIL THEY ARE FIRMLY ESTABLISHED. THIS IS ESPECIALLY TRUE WHEN SEEDINGS ARE MADE LATE IN THE PLANTING SEASON, IN ABNORMALLY DRY OR HOT SEASONS, OR ON ADVERSE SITES.

PERMANENT SEEDING SUMMARY

HARDINESS ZONE (FROM FIGURE B.3): 7A SEED MIXTURE (FROM TABLE B.3): #9					FERTILIZER RATE (10-20-20)			LIME RATE
NO.	SPECIES	APPLICATION RATE (LB/AC)	SEEDING DATES	SEEDING DEPTHS	N	P_2O_5	K_2O	
	TALL FESCUE	60	MAR 1 TO MAY 15; AUG 15 TO OCT 15	1/4-1/2 INCH	45 LB/AC (1.0 LB/ 1000SF)	90 LB/AC (2.0 LB/ 1000SF)	90 LB/AC (2.0 LB/ 1000SF)	2 TONS/AC (90 LB/ 1000SF)
	KENTUCKY BLUEGRASS	40	MAR 1 TO MAY 15; AUG 15 TO OCT 15	1/4-1/2 INCH				
	PERENNIAL RYEGRASS	20	MAR 1 TO MAY 15; AUG 15 TO OCT 15	1/4-1/2 INCH				

B. SOD: TO PROVIDE QUICK COVER ON DISTURBED AREAS (2:1 GRADE OR FLATTER).
1. GENERAL SPECIFICATIONS
A. CLASS OF TURFGRASS SOD MUST BE MARYLAND STATE CERTIFIED. SOD LABELS MUST BE MADE AVAILABLE TO THE JOB FOREMAN AND INSPECTOR.
B. SOD MUST BE MACHINE CUT AT A UNIFORM SOIL THICKNESS OF 3/4 INCH, PLUS OR MINUS ¼ INCH, AT THE TIME OF CUTTING. MEASUREMENT FOR THICKNESS MUST EXCLUDE TOP GROWTH AND THATCH. BROKEN PADS AND TORN OR UNEVEN ENDS WILL NOT BE ACCEPTABLE.
C. STANDARD SIZE SECTIONS OF SOD MUST BE STRONG ENOUGH TO SUPPORT THEIR OWN WEIGHT AND RETAIN THEIR SIZE AND SHAPE WHEN SUSPENDED VERTICALLY WITH A FIRM GRASP ON THE UPPER 10 PERCENT OF THE SECTION.
D. SOD MUST NOT BE HARVESTED OR TRANSPLANTED WHEN MOISTURE CONTENT (EXCESSIVELY DRY OR WET) MAY ADVERSELY AFFECT ITS SURVIVAL.
E. SOD MUST BE HARVESTED, DELIVERED, AND INSTALLED WITHIN A PERIOD OF 36 HOURS. SOD NOT TRANSPLANTED WITHIN THIS PERIOD MUST BE APPROVED BY AN AGRONOMIST OR SOIL SCIENTIST PRIOR TO ITS INSTALLATION.
2. SOD INSTALLATION
A. DURING PERIODS OF EXCESSIVELY HIGH TEMPERATURE OR IN AREAS HAVING DRY SUBSOIL, LIGHTLY IRRIGATE THE SUBSOIL IMMEDIATELY PRIOR TO LAYING THE SOD.
B. LAY THE FIRST ROW OF SOD IN A STRAIGHT LINE WITH SUBSEQUENT ROWS PLACED PARALLEL TO IT AND TIGHTLY WEDGED AGAINST EACH OTHER. STAGGER LATERAL JOINTS TO PROMOTE MORE UNIFORM GROWTH AND STRENGTH. ENSURE THAT SOD IS NOT STRETCHED OR OVERLAPPED AND THAT ALL JOINTS ARE BUTTED TIGHT IN ORDER TO PREVENT VOIDS WHICH WOULD CAUSE AIR DRYING OF THE ROOTS.
C. WHEREVER POSSIBLE, LAY SOD WITH THE LONG EDGES PARALLEL TO THE CONTOUR AND WITH STAGGERING JOINTS. ROLL AND TAMP, PEG OR OTHERWISE SECURE THE SOD TO PREVENT SLIPPAGE ON SLOPES. ENSURE SOLID CONTACT EXISTS BETWEEN SOD ROOTS AND THE UNDERLYING SOIL SURFACE.
D. WATER THE SOD IMMEDIATELY FOLLOWING ROLLING AND TAMPING UNTIL THE UNDERSIDE OF THE NEW SOD PAD AND SOIL SURFACE BELOW THE SOD ARE THOROUGHLY WET. COMPLETE THE OPERATIONS OF LAYING, TAMPING AND IRRIGATING FOR ANY PIECE OF SOD WITHIN EIGHT HOURS.
3. SOD MAINTENANCE
A. IN THE ABSENCE OF ADEQUATE RAINFALL, WATER DAILY DURING THE FIRST WEEK OR AS OFTEN AND SUFFICIENTLY AS NECESSARY TO MAINTAIN MOIST SOIL TO A DEPTH OF 4 INCHES. WATER SOD DURING THE HEAT OF THE DAY TO PREVENT WILTING.
B. AFTER THE FIRST WEEK, SOD WATERING IS REQUIRED AS NECESSARY TO MAINTAIN ADEQUATE MOISTURE CONTENT.
C. DO NOT MOW UNTIL THE SOD IS FIRMLY ROOTED. NO MORE THAN 1/3 OF THE GRASS LEAF MUST BE REMOVED BY THE INITIAL CUTTING OR SUBSEQUENT CUTTINGS. MAINTAIN A GRASS HEIGHT OF AT LEAST 3 INCHES UNLESS OTHERWISE SPECIFIED.

B-4-6 STANDARDS AND SPECIFICATIONS
FOR
SOIL STABILIZATION MATTING

DEFINITION

MATERIAL USED TO TEMPORARILY OR PERMANENTLY STABILIZE CHANNELS OR STEEP SLOPES UNTIL GROUNDCOVER IS ESTABLISHED.

PURPOSE

TO PROTECT THE SOILS UNTIL VEGETATION IS ESTABLISHED.

CONDITIONS WHERE PRACTICE APPLIES

ON NEWLY SEEDED SURFACES TO PREVENT THE APPLIED SEED FROM WASHING OUT; IN CHANNELS AND ON STEEP SLOPES WHERE THE FLOW HAS EROSIVE VELOCITIES OR CONVEYS CLEAR WATER; ON TEMPORARY SWALES, EARTH DIKES, AND PERIMETER DIKE SWALES AS REQUIRED BY THE RESPECTIVE DESIGN STANDARD; AND, ON STREAM BANKS WHERE MOVING WATER IS LIKELY TO WASH OUT NEW VEGETATIVE PLANTINGS.

DESIGN CRITERIA

1. THE SOIL STABILIZATION MATTING THAT IS USED MUST WITHSTAND THE FLOW VELOCITIES AND SHEAR STRESSES DETERMINED FOR THE AREA, BASED ON THE 2-YEAR, 24-HOUR FREQUENCY STORM FOR TEMPORARY APPLICATIONS AND THE 10-YEAR, 24-HOUR FREQUENCY STORM FOR PERMANENT APPLICATIONS. DESIGNATE ON THE PLAN THE TYPE OF SOIL STABILIZATION MATTING USING THE STANDARD SYMBOL AND INCLUDE THE CALCULATED SHEAR STRESS FOR THE RESPECTIVE TREATMENT AREA.
2. MATTING IS REQUIRED ON PERMANENT CHANNELS WHERE THE RUNOFF VELOCITY EXCEEDS TWO AND HALF FEET PER SECOND (2.5 FPS) OR THE SHEAR STRESS EXCEEDS TWO POUNDS PER SQUARE FOOT (2 LBS/FT2). ON TEMPORARY CHANNELS DISCHARGING TO A SEDIMENT TRAPPING PRACTICE, PROVIDE MATTING WHERE THE RUNOFF VELOCITY EXCEEDS FOUR FEET PER SECOND (4 FPS).
3. TEMPORARY SOIL STABILIZATION MATTING IS MADE WITH DEGRADABLE (LASTS 6 MONTHS MINIMUM), NATURAL, OR MANMADE FIBERS OF UNIFORM THICKNESS AND DISTRIBUTION OF FIBERS THROUGHOUT AND IS SMOLDER RESISTANT. THE MAXIMUM PERMISSIBLE VELOCITY FOR TEMPORARY MATTING IS 6 FEET PER SECOND.
4. PERMANENT SOIL STABILIZATION MATTING IS AN OPEN WEAVE, SYNTHETIC MATERIAL CONSISTING OF NONDEGRADABLE FIBERS OR ELEMENTS OF UNIFORM THICKNESS AND DISTRIBUTION OF WEAVE THROUGHOUT. THE MAXIMUM PERMISSIBLE VELOCITY FOR PERMANENT MATTING IS 8.5 FEET PER SECOND.

5. CALCULATE CHANNEL VELOCITY AND SHEAR STRESS USING THE FOLLOWING PROCEDURE:

SHEAR STRESS (τ) IS A MEASURE OF THE FORCE OF MOVING WATER AGAINST THE SUBSTRATE AND IS CALCULATED AS:

$\tau = \gamma \times R \times S_w$ WHERE:
τ = SHEAR STRESS (LB/FT2)
γ = WEIGHT DENSITY OF WATER (62.4 LB/FT3)
R = AVERAGE WATER DEPTH (HYDRAULIC RADIUS) (FT)
Sw = WATER SURFACE SLOPE (FT/FT)

VELOCITY (v) MEASURES THE RATE OF FLOW THROUGH A DEFINED AREA AND IS CALCULATED AS:
WHERE:

$$v = \frac{1.48 R^{\frac{2}{3}} s^{\frac{1}{2}}}{n}$$

v = VELOCITY (FT/SEC)
n = MANNING'S ROUGHNESS COEFFICIENT
R = HYDRAULIC RADIUS (FT)
s = CHANNEL SLOPE (FT/FT)

6. USE TABLE B.7 TO ASSIST IN SELECTING THE APPROPRIATE SOIL STABILIZATION MATTING FOR SLOPE APPLICATIONS BASED ON THE SLOPE, THE SLOPE LENGTH, AND THE SOIL-ERODIBILITY K FACTOR.

B-4-8 STANDARDS AND SPECIFICATIONS
FOR
STOCKPILE AREA

DEFINITION

A MOUND OR PILE OF SOIL PROTECTED BY APPROPRIATELY DESIGNED EROSION AND SEDIMENT CONTROL MEASURES.

PURPOSE

TO PROVIDE A DESIGNATED LOCATION FOR THE TEMPORARY STORAGE OF SOIL THAT CONTROLS THE POTENTIAL FOR EROSION, SEDIMENTATION, AND CHANGES TO DRAINAGE PATTERNS.

CONDITIONS WHERE PRACTICE APPLIES

STOCKPILE AREAS ARE UTILIZED WHEN IT IS NECESSARY TO SALVAGE AND STORE SOIL FOR LATER USE.

CRITERIA

1. THE STOCKPILE LOCATION AND ALL RELATED SEDIMENT CONTROL PRACTICES MUST BE CLEARLY INDICATED ON THE EROSION AND SEDIMENT CONTROL PLAN.
2. THE FOOTPRINT OF THE STOCKPILE MUST BE SIZED TO ACCOMMODATE THE ANTICIPATED VOLUME OF MATERIAL AND BASED ON A SIDE SLOPE RATIO NO STEEPER THAN 2:1. BENCHING MUST BE PROVIDED IN ACCORDANCE WITH SECTION B-3 LAND GRADING.
3. RUNOFF FROM THE STOCKPILE AREA MUST DRAIN TO A SUITABLE SEDIMENT CONTROL PRACTICE.
4. ACCESS THE STOCKPILE AREA FROM THE UPGRADE SIDE.
5. CLEAR WATER RUNOFF INTO THE STOCKPILE AREA MUST BE MINIMIZED BY USE OF A DIVERSION DEVICE SUCH AS AN EARTH DIKE, TEMPORARY SWALE OR DIVERSION FENCE. PROVISIONS MUST BE MADE FOR DISCHARGING CONCENTRATED FLOW IN A NON-EROSIVE MANNER.
6. WHERE RUNOFF CONCENTRATES ALONG THE TOE OF THE STOCKPILE FILL, AN APPROPRIATE EROSION/SEDIMENT CONTROL PRACTICE MUST BE USED TO INTERCEPT THE DISCHARGE.
7. STOCKPILES MUST BE STABILIZED IN ACCORDANCE WITH THE 3/7 DAY STABILIZATION REQUIREMENT AS WELL AS STANDARD B-4-1 INCREMENTAL STABILIZATION AND STANDARD B-4-4 TEMPORARY STABILIZATION.
8. IF THE STOCKPILE IS LOCATED ON AN IMPERVIOUS SURFACE, A LINER SHOULD BE PROVIDED BELOW THE STOCKPILE TO FACILITATE CLEANUP. STOCKPILES CONTAINING CONTAMINATED MATERIAL MUST BE COVERED WITH IMPERMEABLE SHEETING.

MAINTENANCE

THE STOCKPILE AREA MUST CONTINUOUSLY MEET THE REQUIREMENTS FOR ADEQUATE VEGETATIVE ESTABLISHMENT IN ACCORDANCE WITH SECTION B-4 VEGETATIVE STABILIZATION. SIDE SLOPES MUST BE MAINTAINED AT NO STEEPER THAN A 2:1 RATIO. THE STOCKPILE AREA MUST BE KEPT FREE OF EROSION. IF THE VERTICAL HEIGHT OF A STOCKPILE EXCEEDS 20 FEET FOR 2:1 SLOPES, 30 FEET FOR 3:1 SLOPES, OR 40 FEET FOR 4:1 SLOPES, BENCHING MUST BE PROVIDED IN ACCORDANCE WITH SECTION B-3 LAND GRADING.

TABLE B.7: SOIL STABILIZATION ON SLOPES

SLOPE	20:1 FLATTER (≥5%)			20:1 FLATTER (≥5%)			20:1 FLATTER (≥5%)			20:1 FLATTER (≥5%)			20:1 FLATTER (≥5%)		
SLOPE LENGTH (FEET)*	0-30	30-60	60-120	0-30	30-60	60-120	0-30	30-60	60-120	0-30	30-60	60-120	0-30	30-60	60-120
STRAW MULCH/WOOD CELLULOSE FIBER	■	■	■	■ FOR K ≥ 0.35**	■	■	■	■	■						
TEMPORARY MATTING WITH DESIGN SHEAR STRESS ≥ 1.5 LB/SF	■	■	■	■	■	■	■	■	■						
TEMPORARY MATTING WITH DESIGN SHEAR STRESS ≥ 1.75 LB/SF	■	■	■	■	■	■	■	■	■	■	■				
TEMPORARY MATTING WITH DESIGN SHEAR STRESS ≥ 2.0 LB/SF	■	■	■	■	■	■	■	■	■	■	■	■	■		
TEMPORARY MATTING WITH DESIGN SHEAR STRESS ≥ 2.25 LB/SF	■	■	■	■	■	■	■	■	■	■	■	■	■	■	■

■ EFFECTIVE RANGE FOR ALL K VALUES UNLESS OTHERWISE SPECIFIED

* SLOPE LENGTH INCLUDES CONTRIBUTING FLOW LENGTH.
** SOIL HAVING A K VALUE LESS THAN OR EQUAL TO 0.35 CAN BE STABILIZED EFFECTIVELY WITH STRAW MULCH OR WOOD CELLULOSE FIBER WHEN LOCATED ON SLOPES STEEPER THAN 5%. SOIL STABILIZATION MATTING IS REQUIRED ON ALL SLOPES STEEPER THAN 5% THAT HAVE SOIL WITH A K FACTOR GREATER THAN 0.35. K FACTOR RATINGS ARE PUBLISHED IN THE NRCS SOIL SURVEY HTTP://WEBSOILSURVEY.NRCS.USDA.GOV/APP. DURING CONSTRUCTION OR RECLAMATION, THE SOILERODIBILITY K VALUE SHOULD REPRESENT THE UPPER 6 INCHES OF THE FINAL FILL MATERIAL RE-SPREAD AS THE LAST LIFT. ONLY THE EFFECTS OF ROCK FRAGMENTS WITHIN THE SOIL PROFILE ARE CONSIDERED IN THE ESTIMATION OF THE K VALUE. DO NOT ADJUST K VALUES TO ACCOUNT FOR ROCKS ON THE SOIL SURFACE OR INCREASES IN SOIL ORGANIC MATTER RELATED TO MANAGEMENT ACTIVITIES.

MAINTENANCE

VEGETATION MUST BE ESTABLISHED AND MAINTAINED SO THAT THE REQUIREMENTS FOR ADEQUATE VEGETATIVE ESTABLISHMENT ARE CONTINUOUSLY MET IN ACCORDANCE WITH SECTION B-4 VEGETATIVE STABILIZATION.

SEQUENCE OF OPERATIONS/CONSTRUCTION:

1. Notify Baltimore County Department of Environmental Protection and Resource Management, Inspection and Enforcement Division, (410) 887-3226 at 48 hours prior to beginning work.
2. Provide survey and layout of the limit of disturbance (LOD) and erosion & sediment control (esc) devices. The LOD must be field marked prior to and inspected at the pre-construction meeting. If applicable. orange high visibility fence shall be manually installed along the limit of disturbance, where the limit is within 50 feet of the forest buffer/conservation easement.
3. Conduct on-site pre-construction meeting with all parties to discuss issues including, but not limited to location of Contractor's staging area and stockpile location, means and methods, limits of work responsibilities, and to inspect the site for any unforeseen conditions.
4. Perform clearing and grubbing as necessary to install erosion & sediment control devices only.
5. Install erosion & sediment control devices including, but not limited to, stabilized construction entrance, silt fence, temporary asphalt berm. Stabilize as necessary.
6. Notify Baltimore County Department of Environmental Protection and Resource Management, Inspection and Enforcement Division, upon completion of said installation.
7. With the approval of Baltimore County Department of Environmental Protection and Resource Management, and the sediment control inspector, clear and grub remainder of site.
8. Begin existing building renovations and improvements.
9. Concurrent with step #8, with the permission of the sediment control inspector, remove asphalt, aggregate base, conduit, fire hydrants and fence as designated on the Demolition Site Plan.
10. Concurrent with step #9, begin installation of conduit, fire hydrants, generator, and fence as designated on the New Work Plan. Rough grade areas and immediately stabilize.
A. Excavated trench material shall be placed on the high side of the trench.
B. End of each work day, contractor shall stabilize work site. If trench cannot be backfilled, temporary framing and waterproofing shall be installed to protect trench from rainwater. Any dewatering shall be done using approved MDE devices.
11. Rough grade area to construct new driveway entrances and parking lots.
19. Complete fine grading and topsoil of proposed lawn. Complete seeding and mulching of lawn areas. Permanently stabilize areas disturbed during this process.
21. Upon permanent stabilization of the entire site and with approval of sediment control inspector, remove sediment control devices and stabilize those areas disturbed by this process.

CONTRACT COMPLETION BOX
CONTRACTOR: ____________
DATE COMPLETED: ____________
INSPECTOR: ____________
PIPE MATERIAL (Pressure Only) ____________

DWG. FILENAME:

CITY OF BALTIMORE		REVISION - CITY OF BALTIMORE	
CHIEF, OFFICE OF ENGINEERING AND CONSTRUCTION	DATE	CHIEF, FACILITIES ENGINEERING SECTION	DATE

SEAL
STATE OF MARYLAND · JUDITH A. CARROLL · No. 14446 · PROFESSIONAL ENGINEER
DATE : 9/17/2020

PROFESSIONAL CERTIFICATION
I HEREBY CERTIFY THAT THESE DOCUMENTS WERE PREPARED OR APPROVED BY ME, AND THAT I AM A DULY LICENSED PROFESSIONAL ENGINEER UNDER THE LAWS OF THE STATE OF MARYLAND.
LICENSE NO. 14446, EXPIRATION DATE 05/25/2021.

ENGINEER: CARROLL ENGINEERING
215 SCHILLING CIR. SUITE 102
HUNT VALLEY, MD 21031
AS-BUILT PER RECORD PRINT
BY:
DATE:

DESIGN BY: GHT
DRAWN BY: GHT
CHKD BY: CMS

REVISION	BY	DATE	P.W.A. NO.	KEY SHEET	POSITION SHT	DRAWING SCALE		DEPARTMENT OF PUBLIC WORKS
			-	V-NE DD-SE	77 NW 5,6 82 NW 5,6	PLAN SCALE:	AS SHOWN	SEE DRAWING 2020-0428 FOR ORIGINAL SIGNATURES
			R.O.W NO.			PROFILE SCALE:	N/A N/A	
CONTRACT COMPLETION BOX			-					

BUREAU OF ENGINEERING AND CONSTRUCTION	HIGHWAYS	STRUCTURES	STORM DRAINS	SEWER	WATER	FIELD ENGINEER	BUR. OF ENGINEERING & CONSTRUCTION

SEE DRAWING 2020-0428 FOR ORIGINAL SIGNATURES

BALTIMORE COUNTY DEPARTMENT OF PUBLIC WORKS BUREAU OF ENGINEERING & CONSTRUCTION
SPARKS PUMPING STATION
EROSION AND SEDIMENT CONTROL NOTES
SPARKS WATER PUMPING STATION AND ELEVATED WATER STORAGE TANK IMPROVEMENTS
SUBDIVISION: SPARKS, MD ELECTION DIST. NO.: 8C3

BALTIMORE COUNTY MARYLAND

SHEET DESIGNATION	CONTRACT NUMBER
C-13	20094WXO
	JOB ORDER NUMBER
	231-203-0035-0514
	SHEET 16 OF 71
	DRAWING NUMBER
	2020-0443
	FILE NO.: REV. 01/17

DESIGN CRITERIA

1. DESIGN GRAVITY LIVE LOADS:

AREA	LIVE LOAD
ROOF	30 PSF

2. SNOW LOADING IBC 2015

GROUND SNOW LOAD	30 PSF
FLAT ROOF SNOW LOAD	25.2 PSF + SNOW DRIFT
SNOW EXPOSURE FACTOR	1.0
SNOW IMPORTANCE FACTOR	1.2
THERMAL FACTOR	1.0

3. WIND LOADING IBC 2015

ULTIMATE WIND SPEED (3 SECOND GUST)	120 MPH
NOMINAL WIND SPEED	93 MPH
RISK CATEGORY	IV
WIND EXPOSURE CATEGORY	B
INTERNAL PRESSURE COEFFICIENT	0.18

4. SEISMIC LOADING IBC 2015

RISK FACTOR	IV
SEISMIC IMPORTANCE FACTOR	1.50
Ss	0.140 G
S1	0.053 G
SDS	0.149 G
SD1	0.085 G
SITE CLASS	D
SEISMIC DESIGN CATEGORY	C

5. CODES AND SPECIFICATIONS
   A. INTERNATIONAL BUILDING CODES (IBC) 2015
   *PER IBC 2015 CHAPTER 34, SEISMIC IMPLICATIONS OF STRUCTURAL ALTERATIONS HERE WITHIN CAN BE IGNORED.
   B. AISC MINIMUM DESIGN LOADS FOR BUILDINGS AND OTHER STRUCTURES ASCE7-10
   C. AMERICAN INSTITUTE OF STEEL CONSTRUCTION (AISC) 13TH EDITION
   D. BUILDING CODE REQUIREMENTS FOR STRUCTURAL CONCRETE (ACI 318-11)
   E. BUILDING CODE REQUIREMENTS FOR ENVIRONMENTAL ENGINEERING CONCRETE STRUCTURES (ACI 350-10)
   F. BUILDING CODE REQUIREMENTS FOR MASONRY CONSTRUCTION (ACI 530-11)

SUBMITTALS

1. BEFORE SUBMISSION OF SHOP DRAWINGS, THE CONTRACTOR SHALL HAVE DETERMINED AND VERIFIED ALL QUANTITIES, DIMENSIONS, SPECIFIED PERFORMANCE CRITERIA, INSTALLATION REQUIREMENTS, MATERIALS, CATALOG NUMBERS AND SIMILAR DATA AND SHALL HAVE COORDINATED EACH SHOP DRAWING WITH OTHER SHOP DRAWINGS AND THE REQUIREMENTS OF THE CONTRACT DOCUMENTS.
2. PRIOR TO SUBMISSION, THE CONTRACTOR SHALL STAMP OR PROVIDE A SIMILAR WRITTEN INDICATION THAT THE CONTRACTOR HAS REVIEWED THE SUBMISSION AND IS SATISFIED THE CONTENTS ARE IN COMPLIANCE WITH THE CONTRACT DOCUMENTS.
3. NO DIMENSIONAL INFORMATION MAY BE OBTAINED BY DIRECT SCALING OF THE DRAWINGS.

EXISTING CONSTRUCTION

1. ALL MEMBER SIZES, DIMENSIONS, AND ELEVATIONS OF EXISTING STRUCTURES SHOWN ON THE DRAWINGS ARE OBTAINED FROM AVAILABLE SOURCES, AND ARE NOT GUARANTEED TO BE TRUE AND EXACT. THE CONTRACTOR SHALL VERIFY THE DIMENSIONS AND ELEVATIONS BY ACTUAL FIELD MEASUREMENTS PRIOR TO FABRICATION OF ANY MATERIALS AND START OF WORK, AND REPORT ANY DISCREPANCIES TO THE ARCHITECT/ENGINEER.
2. THE CONTRACTOR SHALL PROVIDE ALL SHORING, NEEDLING, AND BRACING AS REQUIRED TO SUPPORT THE EXISTING STRUCTURE. THE CONTRACTOR SHALL EXAMINE THE EXISTING STRUCTURE TO DETERMINE THE EXTENT OF NECESSARY SHORING, NEEDLING, AND UNDERPINNING. THE CAPACITY AND METHOD USED FOR SHORING AND NEEDLING SHALL BE THE SOLE RESPONSIBILITY OF THE CONTRACTOR.

DEMOLITION NOTES

1. ANY WORK RELATED TO THE DOORS SHALL BE COORDINATED WITH WILLIAM DOVE PRIOR TO DEMOLITION. THE CONTRACTOR SHALL INFORM AND COORDINATE WITH WILLIAM DOVE IN WRITING TO ENSURE ALL REQUIRED PROVISIONS ARE MADE REGARDING THE EXISTING SECURITY SYSTEM TO ENSURE A COMPLETE INSTALLATION. WILLIAM DOVE IS AVAILABLE AT (410) 396-0360.
2. REMOVE EXISTING CONSTRUCTION AS SHOWN ON PLANS. SEE PLANS, SECTIONS, AND DETAILS FOR EXTENT OF STRUCTURE TO BE REMOVED.
3. EXISTING STRUCTURAL FRAMING SHALL REMAIN UNLESS SPECIFICALLY NOTED ON PLAN TO BE REMOVED.
4. IF FIELD CONDITIONS DIFFER FROM THOSE SHOWN ON DRAWINGS, NOTIFY STRUCTURAL ARCHITECT/ENGINEER BEFORE PROCEEDING WITH DEMOLITION.
5. IT SHALL BE THE CONTRACTORS RESPONSIBILITY TO EXAMINE THE EXISTING BUILDING DURING THE COURSE OF CONSTRUCTION AND IMMEDIATELY ADVISE THE ARCHITECT/ENGINEER OF ANY AREAS WHERE THE STRUCTURE EXHIBITS DISTRESS OR FAILURE.
6. IT IS THE CONTRACTORS RESPONSIBILITY TO SATISFY HIMSELF AS TO THE LOCATION OF ANY UTILITIES IN THE IMMEDIATE VICINITY OF CONSTRUCTION SO AS TO PREVENT DAMAGE TO THEM. SHOULD ANY DAMAGE TO SUCH UTILITIES OCCUR, THE CONTRACTOR SHALL REPAIR SUCH DAMAGE AT HIS OWN EXPENSE AND TO THE SATISFACTION OF THE OWNER.

CONCRETE

1. ALL CONCRETE WORK, INCLUDING FORMING, MIXING, PLACING, AND CURING, SHALL CONFORM TO THE PROVISIONS OF ACI ENVIRONMENTAL STRUCTURES: CODE REQUIREMENTS (ACI 350-LATEST EDITION).
2. ALL CONCRETE SHALL BE NORMAL WEIGHT CONCRETE HAVING A DESIGN COMPRESSIVE STRENGTH AT 28 DAYS OF 3,500 PSI AND WATER CEMENT RATIO OF 0.50. ALL CONCRETE SHALL MEET ALL OTHER REQUIREMENTS AS LISTED IN THE SPECIFICATIONS.
3. NO CONCRETE SHALL BE PLACED UNTIL CONCRETE DESIGN MIXES HAVE BEEN SUBMITTED AND REVIEWED BY THE ENGINEER.
4. USE A WATER REDUCING ADMIXTURE IN ALL CONCRETE.
5. PROVIDE MIX DESIGNS WITH A MAXIMUM WATER - CEMENT RATIO OF 0.50.
6. SLUMP SHALL BE AS REQUIRED BY ACI 302 - LATEST EDITION.
7. AIR ENTRAIN ALL CONCRETE EXPOSED TO WEATHER TO 5% ± 1%.
8. NO CALCIUM CHLORIDE IN ANY FORM WILL BE PERMITTED IN CONCRETE.
9. ALL STRUCTURAL MEMBERS SHALL BE POURED FOR THEIR FULL DEPTHS IN ONE OPERATION.
10. RETAIN THE SERVICES OF AN INDEPENDENT TESTING AGENCY APPROVED BY THE ENGINEER TO PERFORM TESTS OF CONCRETE. TAKE A MINIMUM OF 4 CYLINDERS OF CONCRETE POURED IN ANY ONE DAY. PERFORM 1 SLUMP TEST PER TRUCK LOAD OF CONCRETE.

CONCRETE MASONRY

1. CONCRETE MASONRY CONSTRUCTION SHALL CONFORM TO ALL REQUIREMENTS OF BUILDING CODE REQUIREMENTS FOR MASONRY STRUCTURES (ACI 530 - LATEST EDITION) AND ACI SPECIFICATIONS FOR MASONRY STRUCTURES (ACI 530.1 - LATEST EDITION).
2. CONCRETE MASONRY UNITS SHALL CONFORM TO THE REQUIREMENTS OF THE MOST RECENT EDITIONS OF THE FOLLOWING STANDARDS:
   A. HOLLOW LOAD-BEARING UNITS — ASTM C90
   B. SOLID LOAD-BEARING UNITS — ASTM C145
   C. HOLLOW NON-LOAD-BEARING UNITS — ASTM C129
   D. CONCRETE BUILDING BRICK — ASTM C55
3. ALL CONCRETE MASONRY UNITS SHALL BE NORMAL WEIGHT.
4. MORTAR FOR REINFORCED AND NON-REINFORCED MASONRY SHALL CONFORM TO THE REQUIREMENTS OF ASTM C270 (LATEST EDITION), TYPE S.
5. GROUT FOR REINFORCED AND NON-REINFORCED MASONRY SHALL CONFORM TO THE REQUIREMENTS OF ASTM C476 (LATEST EDITION).
6. WHERE DRAWINGS SPECIFY GROUT TO BE PROVIDED, 3000 PSI PEA GRAVEL CONCRETE CAN BE SUBSTITUTED IF APPLICABLE TO USE (3000 PSI PEA GRAVEL CONCRETE SHALL NOT BE USED UNDER COLUMN BASEPLATE OR BEARING PLATES).
7. EXCEPT AS OTHERWISE SHOWN, CELLS IN MASONRY UNDER BEARING AREAS FOR BEAMS, LINTELS, AND SLABS SHALL BE FILLED SOLID WITH CONCRETE FOR AT LEAST TWO COURSES (16" MINIMUM) IMMEDIATELY BELOW SUCH BEARING.

STRUCTURAL STEEL

1. ALL STRUCTURAL STEEL SHALL CONFORM TO THE AISC SPECIFICATIONS FOR THE DESIGN, FABRICATION, AND ERECTION OF STRUCTURAL STEEL FOR BUILDINGS.
2. STRUCTURAL STEEL SHALL CONFORM TO THE FOLLOWING ASTM DESIGNATIONS:
   A. STRUCTURAL STEEL W-SHAPES - A992 HAVING A MINIMUM YIELD STRENGTH OF 50 KSI.
   B. STRUCTURAL STEEL CHANNELS, ANGLES, BARS, AND PLATES - A36 HAVING A MINIMUM YIELD STRENGTH OF 36 KSI.
3. BOLTS SHALL CONFORM TO ASTM DESIGNATION - HIGH STRENGTH BOLTS - A325.
4. ALL BOLTS SHALL BE 3/4" DIAMETER, OPEN HOLES 13/16" DIAMETER, UNLESS OTHERWISE SHOWN OR NOTED.
5. WELDING SHALL BE IN ACCORDANCE WITH AWS CODE FOR WELDING IN BUILDING CONSTRUCTION (AWS D1.1) AND SHALL BE PERFORMED BY CERTIFIED WELDERS. ALL WELDS SHALL BE MADE WITH AWS A5.1 E-70XX ELECTRODES.
6. NO PENETRATIONS ARE PERMITTED THROUGH STRUCTURAL STEEL MEMBERS UNLESS INDICATED ON STRUCTURAL DRAWINGS OR APPROVED BY ARCHITECT/ENGINEER.
7. ALL GROUT UNDER STEEL PLATES SHALL BE NON-SHRINK "PRE-MIX" TYPE AND SHALL HAVE A MINIMUM COMPRESSIVE STRENGTH OF 5000 PSI.

REINFORCEMENT

1. ALL CONCRETE REINFORCING STEEL SHALL BE DEFORMED BARS OF INTERMEDIATE GRADE NEW BILLET STEEL CONFORMING TO CURRENT REQUIREMENTS OF ASTM A615, GRADE 60.
2. REINFORCING SHALL HAVE 2" COVER UNLESS OTHERWISE NOTED.
3. SHOP DRAWINGS SHOWING ALL NECESSARY SECTIONS AND DETAILS FOR THE PROPER POSITIONING OF ALL REINFORCING STEEL SHALL BE SUBMITTED TO THE ENGINEER FOR REVIEW BEFORE FABRICATION OR PLACEMENT OF THE STEEL.

STRUCTURAL FIBERGLASS (FRP)

1. ALL FRP STRUCTURAL SHAPES SHALL BE VINYL ESTER RESIN SYSTEM.
2. STRUCTURAL FRP CHANNELS, ANGLES, AND RECTANGULAR TUBING SHALL CONFORM TO THE FOLLOWING ASTM TESTS:
   A. D-638, MINIMUM TENSILE STRESS OF 30 KSI
   B. D-695, MINIMUM COMPRESSIVE STRESS OF 30 KSI
   C. D-790, MINIMUM FLEXURAL STRESS OF 30 KSI
3. NO PENETRATIONS ARE PERMITTED THROUGH STRUCTURAL FRP MEMBERS UNLESS INDICATED ON STRUCTURAL DRAWINGS OR APPROVED BY ENGINEER.
4. SHOP DRAWINGS SHOWING ALL OF THE SECTIONS AND DETAILS NECESSARY FOR THE PROPER PLACEMENT AND CONNECTION OF ALL STRUCTURAL FRP SHALL BE SUBMITTED TO THE ENGINEER FOR REVIEW AND COMMENT PRIOR TO FABRICATION AND ERECTION.

LINTELS

1. CONTRACTOR SHALL COORDINATE SIZE AND TYPE OF LINTEL WITH ARCHITECTURAL, PLUMBING, MECHANICAL, AND ELECTRICAL DRAWINGS.
2. CONTRACTOR SHALL PROVIDE SHORING AND/OR BRACING OF EXISTING WALLS AS REQUIRED TO INSTALL NEW LINTELS. METHOD OF SHORING AND/OR BRACING SHALL BE THE RESPONSIBILITY OF THE CONTRACTOR.
3. ALL LINTELS TO HAVE SOLID BEARING, 8" MINIMUM, EACH END.
4. ALL STEEL LINTELS LOCATED IN EXTERIOR WALLS SHALL BE GALVANIZED.

ALUMINUM

1. FABRICATE ALL STRUCTURAL ALUMINUM IN ACCORDANCE WITH THE SPECIFICATION OF THE ALUMINUM ASSOCIATION.
2. UNLESS SPECIFICALLY INDICATED OTHERWISE, ALL STRUCTURAL ALUMINUM SHALL CONFORM TO THE FOLLOWING:
   A. PLATES, STANDARD STRUCTURAL SHAPES (I-BEAMS, H-BEAMS, CHANNELS, ANGLES, TEES AND ZEES): — ASTM B308, TYPE 6061-T6
   B. STRUCTURAL PIPE AND TUBE: — ASTM B210, TYPE 6061-T6
   C. BOLTS, ALUMINUM: — ASTM B308, TYPE 6061-T6
   D. BOLTS, STAINLESS STEEL: — ASTM F593, GROUP 1 OR 2
3. COAT ALL ALUMINUM IN CONTACT WITH CONCRETE AND OTHER DISSIMILAR METALS WITH BITUMINOUS PAINT ON THE CONTACT SURFACE.
4. USE TYPE 316 STAINLESS STEEL CONNECTION BOLTS FOR CONNECTING ALUMINUM MEMBERS.
5. PROVIDE ALUMINUM GRATING BEARING BARS OF DEPTH AND THICKNESS INDICATED ON PLANS. ALL EXTERIOR GRATING SHALL BE SERRATED. BAND OUTSIDE EDGES OF ALL GRATING AND THE OPENING IN THE GRATING USING ALUMINUM BARS OF THE SAME DEPTH AS THE BEARING BARS.

STAINLESS STEEL

1. UNLESS SPECIFICALLY INDICATED OTHERWISE, ALL STAINLESS STEEL SHALL CONFORM TO THE FOLLOWING:
   A. PLATES AND ANGLES
   NON-SEBMERGED: — ASTM A666, TYPE 304
   SUBMERGED: — ASTM A666, TYPE 316
   B. CHANNELS, I-BEAMS AND TEES: — ASTM A666, TYPE 304
   C. BOLTS, STAINLESS STEEL: — ASTM F593, GROUP 1 OR 2

LINTEL SCHEDULE

MARK	SIZE	COMMENTS	DETAILS
L-1	L4 X 3-1/2 X 5/16 LLV FOR EACH 4" OF WALL THICKNESS. UP TO 6'-0" OPENINGS	FOR CAVITY WALLS, USE 1-L6 X 6 X 5/16 LLV FOR VENEER.	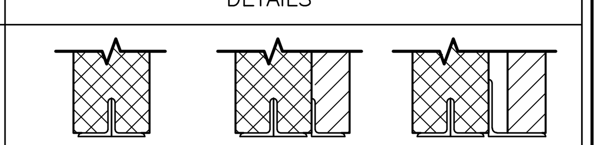

DOOR SCHEDULE

ID	DOOR SIZE	MASONRY OPENING	DOOR MATERIAL	FRAME (TYPE)	HARDWARE	ACCESSORIES	REMARKS
D1	3'-0"x7'-0"	3'-4"x7'-2" (FIELD VERIFY)	FRP	2" PROFILE EQUAL RABBET FRAME	1,3,4,5,6,7	4,5,6,7,8	1-1/2 HR FIRE RATED DOOR
D2	5'-0"x7'-0"	5'-4"x7'-2" (FIELD VERIFY)	FRP	2" PROFILE EQUAL RABBET FRAME	1,3,4,5,6,7	4,5,6,7,8	1-1/2 HR FIRE RATED DOOR

HARDWARE: 1. LOCKS (ENTRANCE) 2. PRIVACY LOCKS 3. HINGES 4. CLOSER 5. BOLTS 6. KICKPLATE 7. DOOR STOP 8. PUSH/PULL

ACCESSORIES: 1. WINDOW 2. LOUVER 3. TRANSOM 4. CUTOUT 5. THRESHOLD 6. WEATHERSTRIP 7. ASTRAGAL 8. DOOR SWEEP

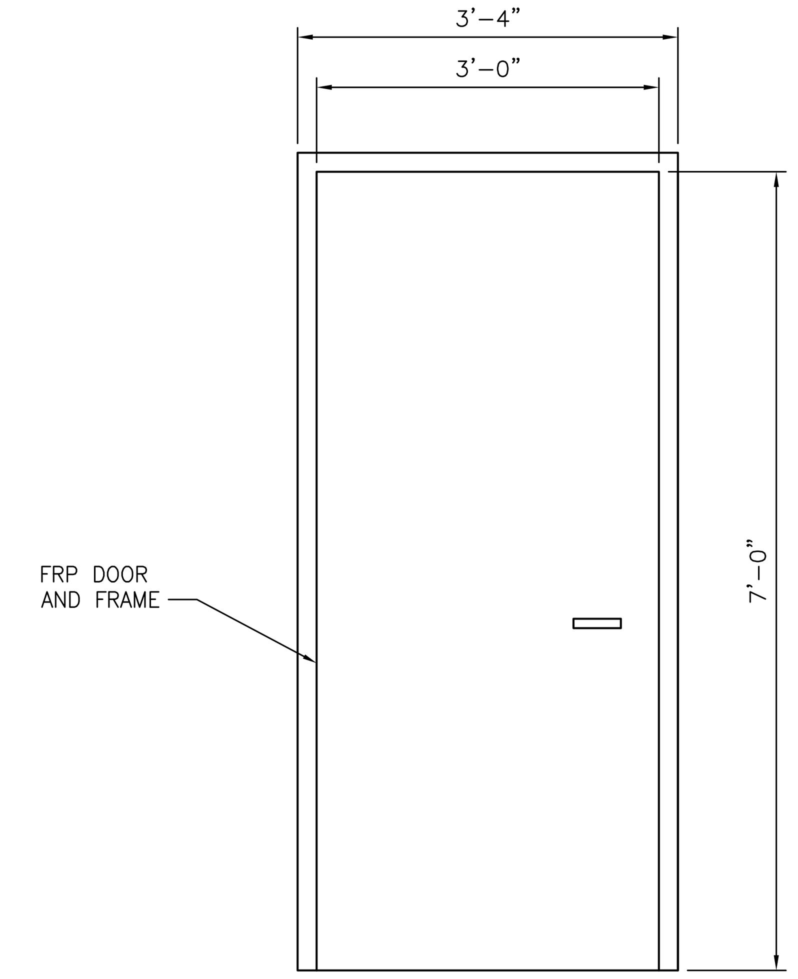

3'x7' DOOR DETAIL
SCALE: NOT TO SCALE

NOTES:
1. CMU AND BRICK LINTEL DETAILS ARE SHOWN ON THIS SHEET.
2. DOOR KEY SYSTEM TO MATCH BALTIMORE CITY KEY SYSTEM.
3. DOOR SHALL BE 1-1/2 HOUR FIRE RATED ASSEMBLY

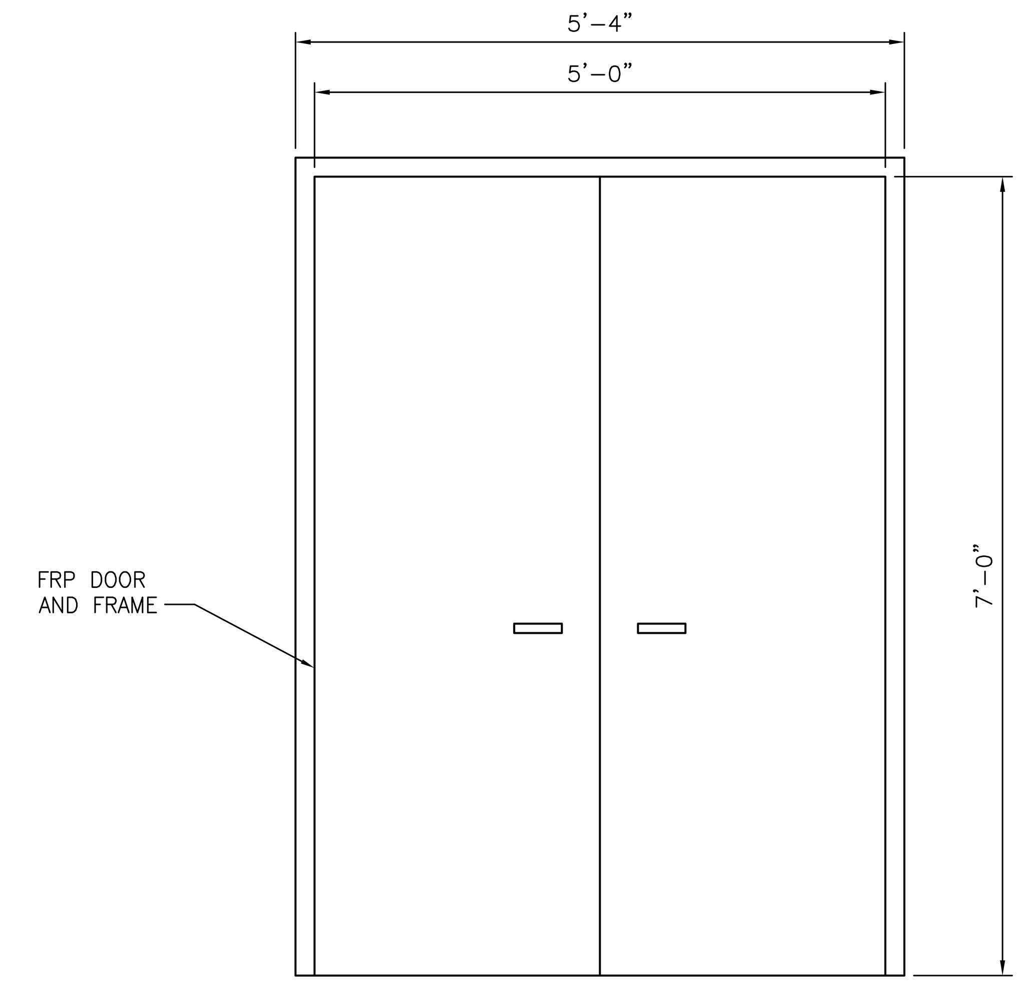

5'x7' DOOR DETAIL
SCALE: NOT TO SCALE

NOTES:
1. CMU AND BRICK LINTEL DETAILS ARE SHOWN ON THIS SHEET.
2. DOOR KEY SYSTEM TO MATCH BALTIMORE CITY KEY SYSTEM.
3. DOOR SHALL BE 1-1/2 HOUR FIRE RATED ASSEMBLY

CONTRACT COMPLETION BOX
CONTRACTOR: ____
DATE COMPLETED: ____
INSPECTOR: ____
PIPE MATERIAL (Pressure Only) ____

DWG. FILENAME:

CITY OF BALTIMORE — CHIEF, OFFICE OF ENGINEERING AND CONSTRUCTION — DATE
REVISION - CITY OF BALTIMORE — CHIEF, FACILITIES ENGINEERING SECTION — DATE

SEAL: STATE OF MARYLAND — KEVIN MARC MERRIMAN — NO. 21155 — REGISTERED PROFESSIONAL ENGINEER
DATE: 9/17/2020

PROFESSIONAL CERTIFICATION
I HEREBY CERTIFY THAT THESE DOCUMENTS WERE PREPARED OR APPROVED BY ME, AND THAT I AM A DULY LICENSED PROFESSIONAL ENGINEER UNDER THE LAWS OF THE STATE OF MARYLAND.
LICENSE NO. 21155, EXPIRATION DATE 03/13/2022.
ENGINEER: CARROLL ENGINEERING, 215 SCHILLING CIR. SUITE 102, HUNT VALLEY, MD 21031
AS-BUILT PER RECORD PRINT — BY: — DATE:
DESIGN BY: BJB — DRAWN BY: BAL — CHKD BY: KMM

REVISION | BY | DATE
CONTRACT COMPLETION BOX
P.W.A. NO.: - | R.O.W NO.: - | KEY SHEET: V-NE DD-SE | POSITION SHT: 77 NW 5,6 82 NW 5,6
DRAWING SCALE — PLAN SCALE: AS SHOWN — PROFILE SCALE: N/A, N/A
DEPARTMENT OF PUBLIC WORKS — SEE DRAWING 2020-0428 FOR ORIGINAL SIGNATURES
BUREAU OF ENGINEERING AND CONSTRUCTION | HIGHWAYS | STRUCTURES | STORM DRAINS | SEWER | WATER | FIELD ENGINEER | BUR. OF ENGINEERING & CONSTRUCTION
SEE DRAWING 2020-0428 FOR ORIGINAL SIGNATURES

BALTIMORE COUNTY DEPARTMENT OF PUBLIC WORKS BUREAU OF ENGINEERING & CONSTRUCTION
SPARKS PUMPING STATION
STRUCTURAL GENERAL NOTES AND DOOR SCHEDULE
SPARKS WATER PUMPING STATION AND ELEVATED WATER STORAGE TANK IMPROVEMENTS
SUBDIVISION: — SPARKS, MD — ELECTION DIST. NO.: 8C3

BALTIMORE COUNTY MARYLAND
SHEET DESIGNATION: S-1
CONTRACT NUMBER: 20094WXO
JOB ORDER NUMBER: 231-203-0035-0514
SHEET 17 OF 71
DRAWING NUMBER: 2020-0444
FILE NO.: — REV. 01/17

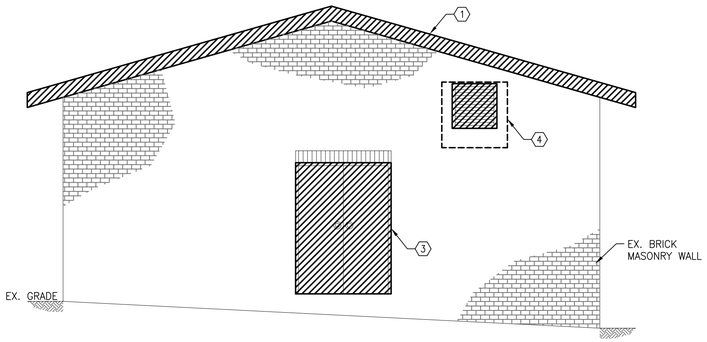

PUMPING STATION – DEMOLITION EAST ELEVATION

SCALE: 1/4" = 1'-0"

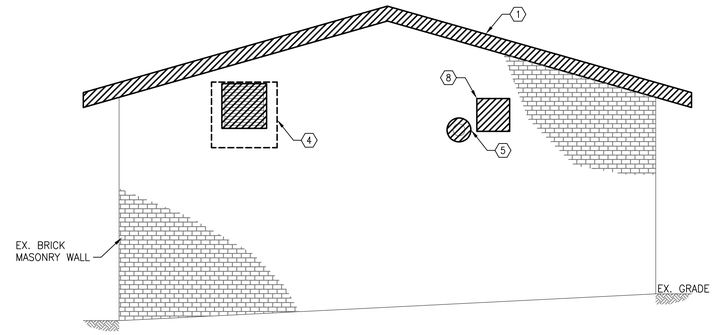

PUMPING STATION – DEMOLITION WEST ELEVATION

SCALE: 1/4" = 1'-0"

GENERAL SHEET NOTES:

1. CONTRACTOR SHALL COORDINATE WITH THE CITY AT LEAST 7 DAYS BEFORE START OF DEMOLITION ACTIVITIES FOR CITY TO TAG ITEMS TO BE SALVAGED.
2. DIMENSIONS ARE PROVIDED FOR THE CONTRACTOR'S REFERENCE. CONTRACTOR IS RESPONSIBLE FOR FIELD VERIFYING ALL DIMENSIONS IN ORDER TO ENSURE A SUCCESSFUL INSTALLATION.
3. CONTRACTOR SHALL PROVIDE ALL SHORING, NEEDLING AND BRACING AS REQUIRED TO SUPPORT THE EXISTING STRUCTURE WHERE EXISTING ELEMENTS ARE CALLED OUT TO BE MODIFIED OR DEMOLISHED.
4. WORK SHALL BE DONE IN ACCORDANCE WITH APPROVED SEQUENCE OF CONSTRUCTION TO MINIMIZE IMPACT TO STATION OPERATIONS.
5. CONTRACTOR SHALL ENSURE THAT SECURITY SYSTEM IS ACTIVE AT ALL TIMES DURING CONSTRUCTION. CONTRACTOR SHALL COORDINATE WITH CITY TO INSTALL SECURITY SYSTEM ON NEW DOORS.

SHEET KEYNOTES:

1. REMOVE EXISTING SLATE ROOF.
2. REMOVE EXISTING 3' x 7' DOOR, DOOR FRAME, AND ALL ASSOCIATED DOOR PARTS. ANY WORK RELATED TO THE DOORS SHALL BE COORDINATED WITH WILLIAM DOVE PRIOR TO DEMOLITION. THE CONTRACTOR SHALL INFORM AND COORDINATE WITH WILLIAM DOVE IN WRITING TO ENSURE ALL REQUIRED PROVISIONS ARE MADE REGARDING THE EXISTING SECURITY SYSTEM TO ENSURE A COMPLETE INSTALLATION. WILLIAM DOVE IS AVAILABLE AT (410) 396-0360.
3. REMOVE EXISTING 5' x 7' DOOR, DOOR FRAME, AND ALL ASSOCIATED DOOR PARTS. ANY WORK RELATED TO THE DOORS SHALL BE COORDINATED WITH WILLIAM DOVE PRIOR TO DEMOLITION. THE CONTRACTOR SHALL INFORM AND COORDINATE WITH WILLIAM DOVE IN WRITING TO ENSURE ALL REQUIRED PROVISIONS ARE MADE REGARDING THE EXISTING SECURITY SYSTEM TO ENSURE A COMPLETE INSTALLATION. WILLIAM DOVE IS AVAILABLE AT (410) 396-0360.
4. REMOVE EXISTING LOUVER/EXHAUST FAN, INCLUDING FRAME AND ASSOCIATED ACCESSORIES. PREPARE EXISTING WALL FOR ENLARGED LOUVER/EXHAUST FAN OPENING.
5. REMOVE EXISTING LOUVER/EXHAUST FAN, INCLUDING FRAME AND ASSOCIATED ACCESSORIES.
6. REMOVE EXISTING GAS CABINET.
7. DRILL THROUGH EXISTING BRICK FOR NEW EQUIPMENT INSTALLATION.
8. PREPARE EXISTING WALL FOR LOUVER/EXHAUST FAN OPENING.

LEGEND

DEMOLITION = -----

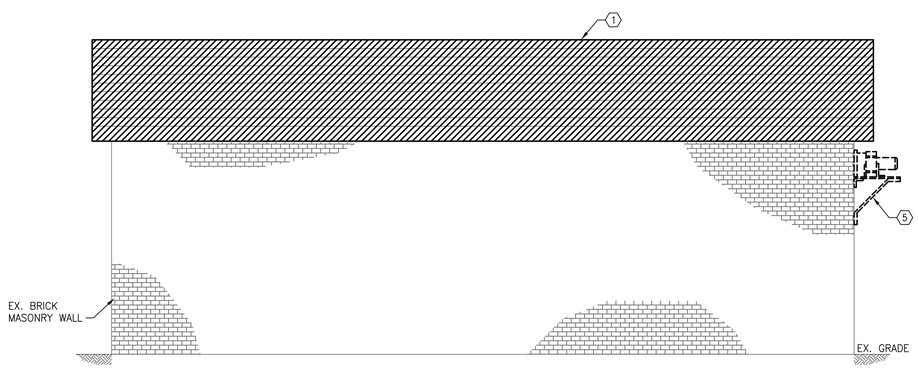

PUMPING STATION – DEMOLITION NORTH ELEVATION

SCALE: 1/4" = 1'-0"

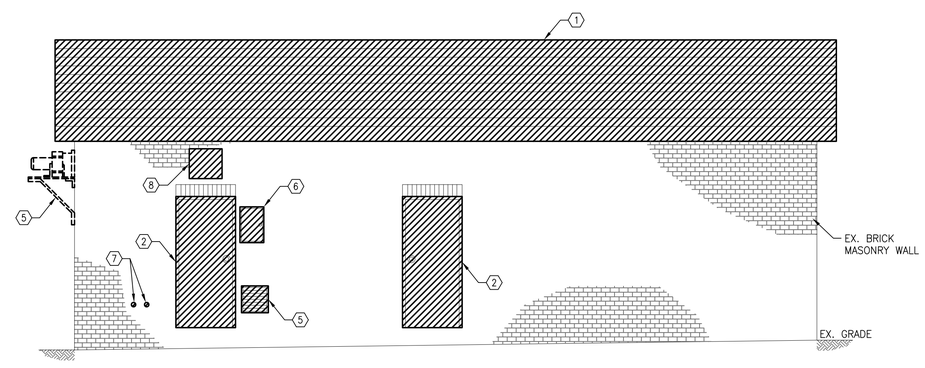

PUMPING STATION – DEMOLITION SOUTH ELEVATION

SCALE: 1/4" = 1'-0"

CITY OF BALTIMORE	REVISION – CITY OF BALTIMORE
CHIEF, OFFICE OF ENGINEERING AND CONSTRUCTION — DATE	CHIEF, FACILITIES ENGINEERING SECTION — DATE

SEAL: STATE OF MARYLAND — MARC BERNARD JOHNSON — No. 21155 — REGISTERED PROFESSIONAL ENGINEER

DATE : 9/17/2020

PROFESSIONAL CERTIFICATION

I HEREBY CERTIFY THAT THESE DOCUMENTS WERE PREPARED OR APPROVED BY ME, AND THAT I AM A DULY LICENSED PROFESSIONAL ENGINEER UNDER THE LAWS OF THE STATE OF MARYLAND.

LICENSE NO. 21155, EXPIRATION DATE 03/13/2022

ENGINEER: CARROLL ENGINEERING
215 SCHILLING CIR. SUITE 102
HUNT VALLEY, MD 21031

AS-BUILT PER RECORD PRINT

BY:
DATE:

DESIGN BY: BJB
DRAWN BY: BAL
CHKD BY: KMM

REVISION	BY	DATE
CONTRACT COMPLETION BOX		

P.W.A. NO.	KEY SHEET	POSITION SHT
–	V-NE	77 NW 5,6
R.O.W NO.		
–		

DRAWING SCALE	
PLAN SCALE:	AS SHOWN
PROFILE SCALE:	N/A
	N/A

DEPARTMENT OF PUBLIC WORKS: SEE DRAWING 2020-0428 FOR ORIGINAL SIGNATURES

BUREAU OF ENGINEERING AND CONSTRUCTION	HIGHWAYS	STRUCTURES	STORM DRAINS	SEWER	WATER	FIELD ENGINEER	BUR. OF ENGINEERING & CONSTRUCTION
SEE DRAWING 2020-0428 FOR ORIGINAL SIGNATURES							

CONTRACT COMPLETION BOX
CONTRACTOR:
DATE COMPLETED:
INSPECTOR:
PIPE MATERIAL (Pressure Only)

DWG. FILENAME:

2' 0 2' 4'
SCALE: ¼"= 1'-0"

BALTIMORE COUNTY DEPARTMENT OF PUBLIC WORKS BUREAU OF ENGINEERING & CONSTRUCTION

SPARKS PUMPING STATION

PUMPING STATION – DEMOLITION ELEVATIONS

SPARKS WATER PUMPING STATION AND ELEVATED WATER STORAGE TANK IMPROVEMENTS

SUBDIVISION: SPARKS, MD ELECTION DIST. NO.: 8C3

SHEET DESIGNATION	CONTRACT NUMBER
S-2	20094WXO
JOB ORDER NUMBER	231-203-0035-0514
SHEET 18 OF 71	
DRAWING NUMBER	2020-0445
FILE NO.:	REV. 8/17/7

GENERAL SHEET NOTES:

1. CONTRACTOR SHALL COORDINATE WITH THE CITY AT LEAST 7 DAYS BEFORE START OF DEMOLITION ACTIVITIES FOR CITY TO TAG ITEMS TO BE SALVAGED.
2. CONTRACTOR SHALL DEMOLISH ITEMS SHOWN ON THIS SHEET TO BE REMOVED OR DEMOLISHED. THE CONTRACTOR SHALL COORDINATE WITH THE MECHANICAL AND ELECTRICAL SHEETS FOR ITEMS TO BE DEMOLISHED.
3. CONTRACTOR SHALL PROVIDE ALL SHORING, NEEDLING AND BRACING AS REQUIRED TO SUPPORT THE EXISTING STRUCTURE WHERE EXISTING ELEMENTS ARE CALLED OUT TO BE MODIFIED OR DEMOLISHED.
4. WORK SHALL BE DONE IN ACCORDANCE WITH APPROVED SEQUENCE OF CONSTRUCTION TO MINIMIZE IMPACT TO STATION OPERATIONS.

SHEET KEYNOTES:

1. REMOVE EXISTING ALUMINUM HANDRAILS.
2. REMOVE EXISTING PIPE SUPPORTS AND PATCH FLOOR FLUSH WITH EXISTING CONCRETE FLOOR PER DETAIL 2 ON S-9.
3. REMOVE EXISTING PUMP ANCHOR BOLTS AND CONCRETE PUMP BASES. PATCH FLOOR FLUSH WITH EXISTING CONCRETE FLOOR PER DETAIL 2 ON S-9.
4. DEMOLISH & REMOVE EXISTING CONCRETE VALVE SUPPORTS.
5. REMOVE EXISTING PIPE SEAL AND PENETRATION FOR INSTALLATION OF NEW WALL CASTING.

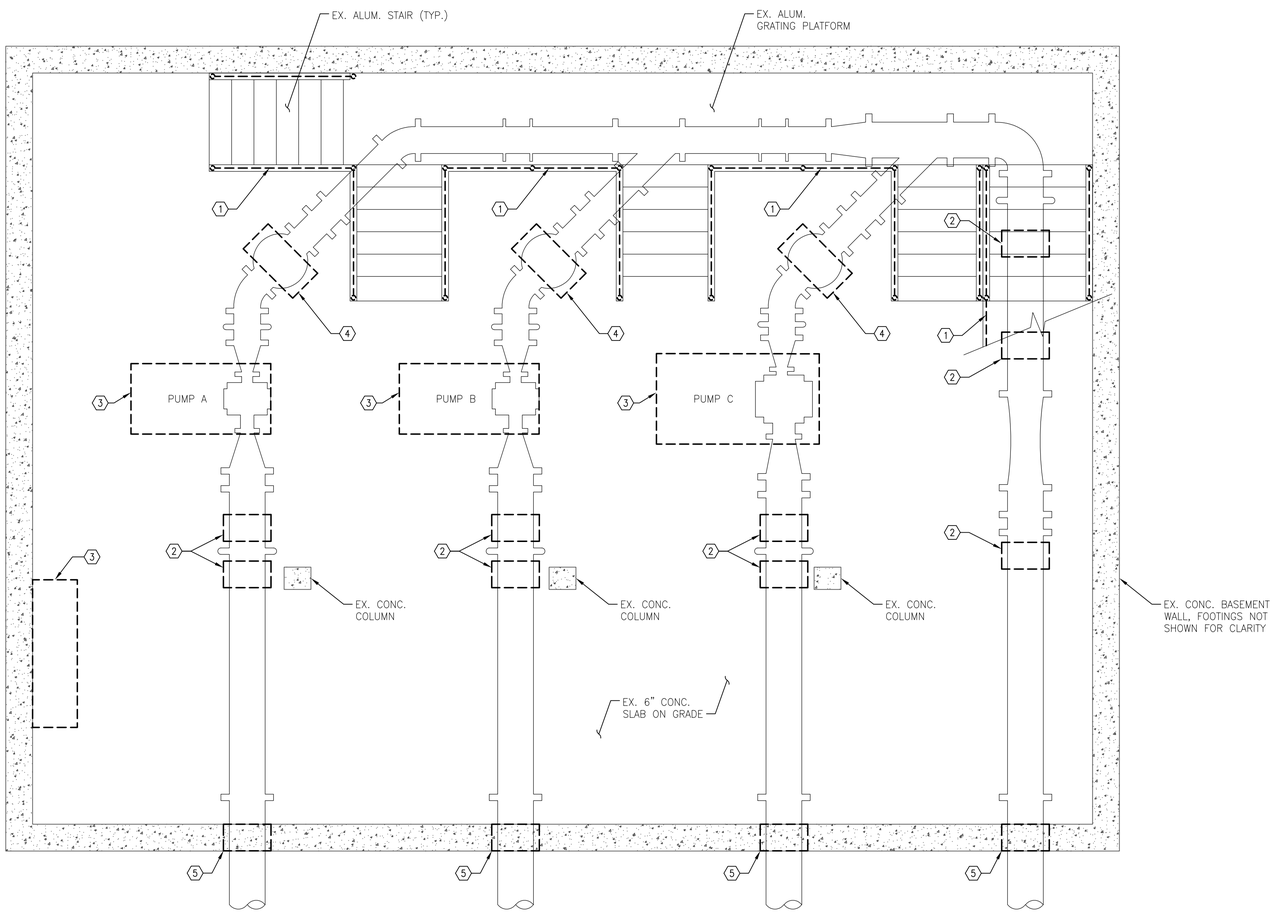

PUMPING STATION – LOWER LEVEL DEMOLITION PLAN AT EL 463.50

SCALE: 3/8" = 1'-0"

CITY OF BALTIMORE	REVISION – CITY OF BALTIMORE
CHIEF, OFFICE OF ENGINEERING AND CONSTRUCTION DATE	CHIEF, FACILITIES ENGINEERING SECTION DATE

SEAL: STATE OF MARYLAND — KEVIN MARC MERRIMAN — NO. 21155 — REGISTERED PROFESSIONAL ENGINEER

DATE : 9/17/2020

PROFESSIONAL CERTIFICATION

I HEREBY CERTIFY THAT THESE DOCUMENTS WERE PREPARED OR APPROVED BY ME, AND THAT I AM A DULY LICENSED PROFESSIONAL ENGINEER UNDER THE LAWS OF THE STATE OF MARYLAND.

LICENSE NO. 21155, EXPIRATION DATE 03/13/2022

ENGINEER: CARROLL ENGINEERING
215 SCHILLING CIR. SUITE 102
HUNT VALLEY, MD 21031

AS-BUILT PER RECORD PRINT

BY:
DATE:

DESIGN BY: BJB
DRAWN BY: BAL
CHKD BY: KMM

REVISION	BY	DATE
CONTRACT COMPLETION BOX		

P.W.A. NO.	KEY SHEET	POSITION SHT
–	V-NE	77 NW 5,6
R.O.W NO.		
–		

DRAWING SCALE	
PLAN SCALE:	AS SHOWN
PROFILE SCALE:	N/A
	N/A

DEPARTMENT OF PUBLIC WORKS: SEE DRAWING 2020-0428 FOR ORIGINAL SIGNATURES

BUREAU OF ENGINEERING AND CONSTRUCTION | HIGHWAYS | STRUCTURES | STORM DRAINS | SEWER | WATER | FIELD ENGINEER | BUR. OF ENGINEERING & CONSTRUCTION

SEE DRAWING 2020-0428 FOR ORIGINAL SIGNATURES

1' 0 1' 2' 3'
SCALE: 3/8"= 1'-0"

BALTIMORE COUNTY DEPARTMENT OF PUBLIC WORKS BUREAU OF ENGINEERING & CONSTRUCTION

SPARKS PUMPING STATION

PUMPING STATION – LOWER LEVEL DEMOLITION PLAN

SPARKS WATER PUMPING STATION AND ELEVATED WATER STORAGE TANK IMPROVEMENTS

SUBDIVISION: SPARKS, MD ELECTION DIST. NO.: 8C3

CONTRACT COMPLETION BOX

CONTRACTOR:
DATE COMPLETED:
INSPECTOR:
PIPE MATERIAL (Pressure Only)

DWG. FILENAME:

SHEET DESIGNATION	CONTRACT NUMBER
S-3	20094WXO
	JOB ORDER NUMBER
	231-203-0035-0514
	SHEET 19 OF 71
	DRAWING NUMBER
	2020-0446
	FILE NO.:

GENERAL SHEET NOTES:

1. CONTRACTOR SHALL COORDINATE WITH THE CITY AT LEAST 7 DAYS BEFORE START OF DEMOLITION ACTIVITIES FOR CITY TO TAG ITEMS TO BE SALVAGED.
2. CONTRACTOR SHALL DEMOLISH ITEMS SHOWN ON THIS SHEET TO BE REMOVED OR DEMOLISHED. THE CONTRACTOR SHALL COORDINATE WITH THE MECHANICAL AND ELECTRICAL SHEETS FOR ITEMS TO BE DEMOLISHED.
3. CONTRACTOR SHALL PROVIDE ALL SHORING, NEEDLING AND BRACING AS REQUIRED TO SUPPORT THE EXISTING STRUCTURE WHERE EXISTING ELEMENTS ARE CALLED OUT TO BE MODIFIED OR DEMOLISHED.
4. WORK SHALL BE DONE IN ACCORDANCE WITH APPROVED SEQUENCE OF CONSTRUCTION TO MINIMIZE IMPACT TO STATION OPERATIONS.
5. CONTRACTOR SHALL ENSURE THAT SECURITY SYSTEM IS ACTIVE AT ALL TIMES DURING CONSTRUCTION. CONTRACTOR SHALL COORDINATE WITH CITY TO INSTALL SECURITY SYSTEM ON NEW DOORS.

SHEET KEYNOTES:

1. REMOVE EXISTING ALUMINUM HANDRAILS. REPAIR HOLES WITH NON-SHRINK GROUT.
2. REMOVE EXISTING 3'-0" x 7'-0" DOOR.
3. REMOVE EXISTING 5'-0" x 7'-0" DOOR.
4. REMOVE EXISTING LOUVER, INCLUDING FRAME AND ASSOCIATED ACCESSORIES.
5. REMOVE EXISTING LOUVER/EXHAUST FAN, INCLUDING FRAME AND ASSOCIATED ACCESSORIES. PREPARE EXISTING WALL FOR ENLARGED LOUVER/EXHAUST FAN OPENING.
6. PREPARE EXISTING WALL FOR LOUVER/EXHAUST FAN OPENING.
7. REMOVE EX. MCC EQUIPMENT PAD AND PREPARE FLOOR FOR NEW MCC PAD & FILL ALL UNUSED FLOOR OPENINGS FLUSH WITH EXISTING SLAB.
8. REMOVE EX. LOUVER/EXHAUST FAN, INCLUDING FRAME AND ASSOCIATED ACCESSORIES.
9. PREPARE EXISTING WALL FOR SODIUM HYPOCHLORITE FILLING STATION.
10. REMOVE EXISTING CONCRETE EQUIPMENT PAD. PATCH FLOOR FLUSH WITH EXISTING CONCRETE FLOOR PER DETAIL 2 ON S-9.
11. REMOVE EXISTING EMBEDDED SCALE. PATCH FLOOR FLUSH WITH EXISTING CONCRETE FLOOR PER DETAIL 2 ON S-9. MAINTAIN EXISTING FLOOR DRAIN.

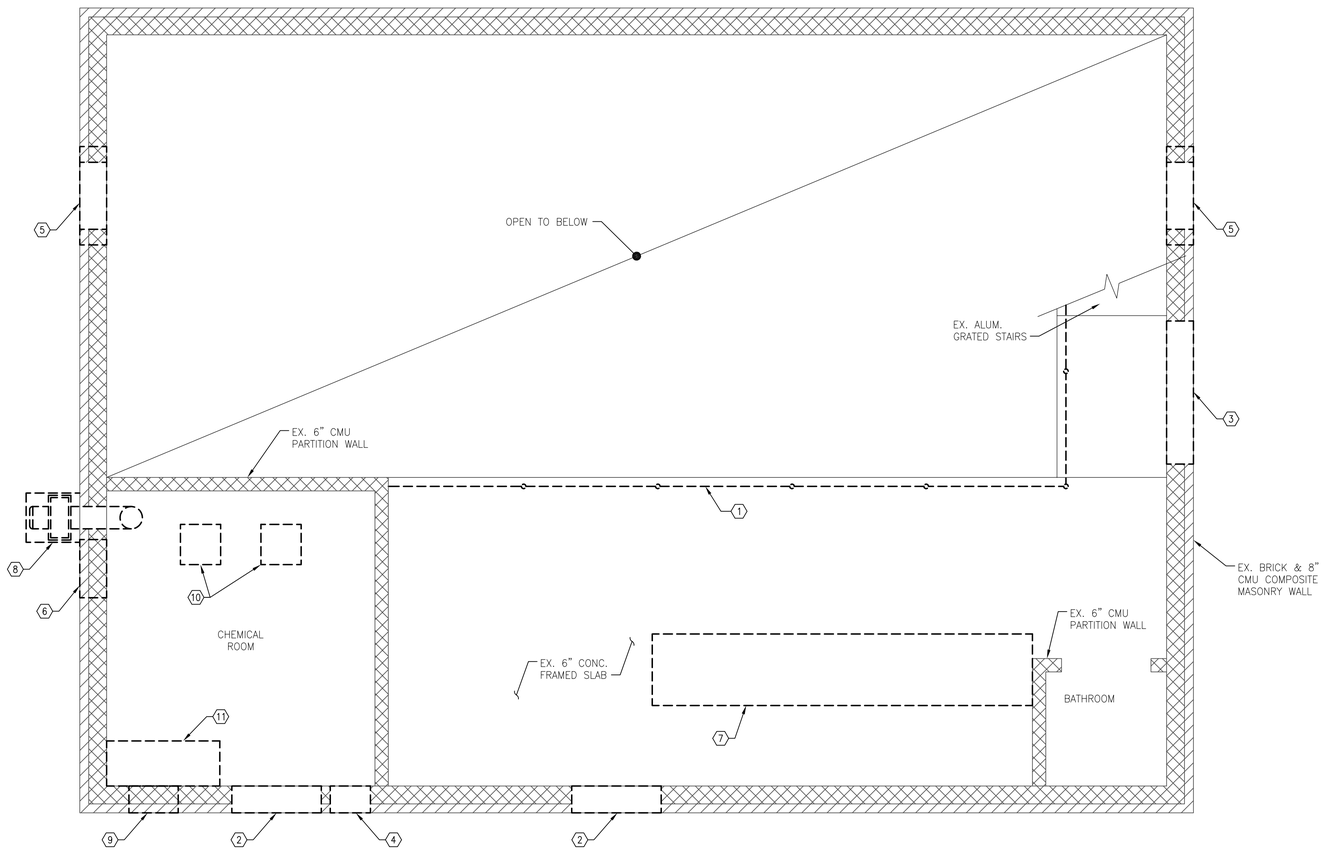

PUMPING STATION – UPPER LEVEL DEMOLITION PLAN AT EL 473.50

SCALE: 3/8" = 1'-0"

1' 0 1' 2' 3'
SCALE: 3/8" = 1'-0"

CITY OF BALTIMORE	REVISION – CITY OF BALTIMORE
CHIEF, OFFICE OF ENGINEERING AND CONSTRUCTION — DATE	CHIEF, FACILITIES ENGINEERING SECTION — DATE

SEAL: STATE OF MARYLAND — MARC MERGELIAN — No. 21155 — REGISTERED PROFESSIONAL ENGINEER

DATE : 9/17/2020

PROFESSIONAL CERTIFICATION

I HEREBY CERTIFY THAT THESE DOCUMENTS WERE PREPARED OR APPROVED BY ME, AND THAT I AM A DULY LICENSED PROFESSIONAL ENGINEER UNDER THE LAWS OF THE STATE OF MARYLAND.
LICENSE NO. 21155, EXPIRATION DATE 03/13/2022.

ENGINEER: CARROLL ENGINEERING
215 SCHILLING CIR. SUITE 102
HUNT VALLEY, MD 21031

AS-BUILT PER RECORD PRINT
BY:
DATE:

DESIGN BY: BJB
DRAWN BY: BAL
CHKD BY: KMM

REVISION	BY	DATE
CONTRACT COMPLETION BOX		

P.W.A. NO.	KEY SHEET	POSITION SHT
–	V-NE	77 NW 5,6
R.O.W NO.		
–		

DRAWING SCALE	
PLAN SCALE:	AS SHOWN
PROFILE SCALE:	N/A
	N/A

DEPARTMENT OF PUBLIC WORKS: SEE DRAWING 2020-0428 FOR ORIGINAL SIGNATURES

BUREAU OF ENGINEERING AND CONSTRUCTION	HIGHWAYS	STRUCTURES	STORM DRAINS	SEWER	WATER	FIELD ENGINEER	BUR. OF ENGINEERING & CONSTRUCTION
SEE DRAWING 2020-0428 FOR ORIGINAL SIGNATURES							

BALTIMORE COUNTY DEPARTMENT OF PUBLIC WORKS BUREAU OF ENGINEERING & CONSTRUCTION

SPARKS PUMPING STATION

PUMPING STATION – UPPER LEVEL DEMOLITION PLAN

SPARKS WATER PUMPING STATION AND ELEVATED WATER STORAGE TANK IMPROVEMENTS

SUBDIVISION: SPARKS, MD ELECTION DIST. NO.: 8C3

CONTRACT COMPLETION BOX

CONTRACTOR:
DATE COMPLETED:
INSPECTOR:
PIPE MATERIAL (Pressure Only)

DWG. FILENAME:

SHEET DESIGNATION	CONTRACT NUMBER
S-4	20094WXO

BALTIMORE COUNTY MARYLAND

JOB ORDER NUMBER
231-203-0035-0514
SHEET 20 OF 71
DRAWING NUMBER
2020-0447
FILE NO.:

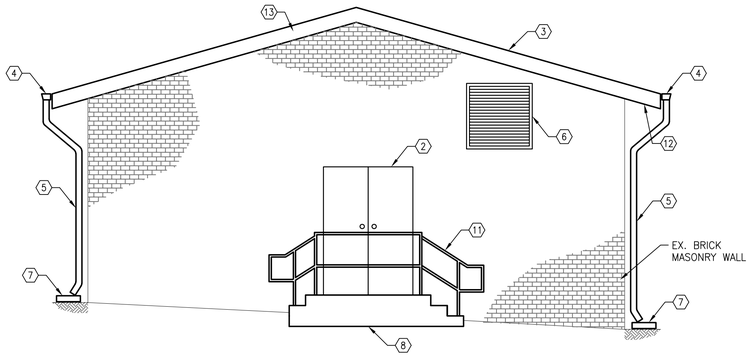

PUMPING STATION – NEW WORK EAST ELEVATION

SCALE: 1/4" = 1'-0"

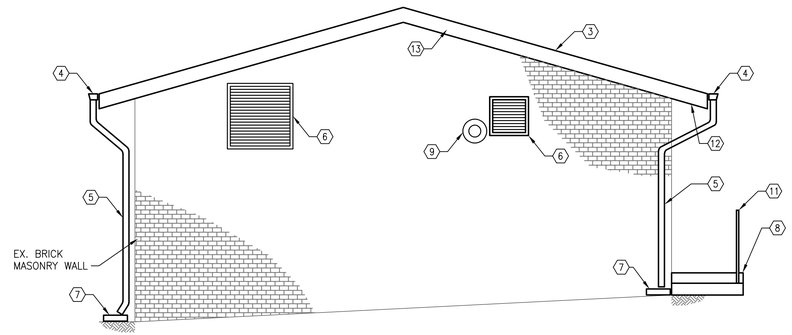

PUMPING STATION – NEW WORK WEST ELEVATION

SCALE: 1/4" = 1'-0"

GENERAL SHEET NOTES:

1. CONTRACTOR SHALL COORDINATE WITH THE CITY AT LEAST 7 DAYS BEFORE START OF DEMOLITION ACTIVITIES FOR CITY TO TAG ITEMS TO BE SALVAGED.
2. WORK SHALL BE DONE IN ACCORDANCE WITH APPROVED SEQUENCE OF CONSTRUCTION TO MINIMIZE IMPACT TO STATION OPERATIONS.
3. CONTRACTOR SHALL ENSURE THAT SECURITY SYSTEM IS ACTIVE AT ALL TIMES DURING CONSTRUCTION. CONTRACTOR SHALL COORDINATE WITH CITY TO INSTALL SECURITY SYSTEM ON NEW DOORS.

SHEET KEYNOTES:

1. INSTALL 3' x 7' FIBERGLASS FIRE RATED DOOR AND FRAME. SEE SCHEDULE ON S-1.
2. INSTALL 5' x 7' FIBERGLASS FIRE RATED DOOR AND FRAME. SEE SCHEDULE ON S-1.
3. INSTALL ASPHALT ROOF AND UNDERLAYMENT.
4. INSTALL 5" ALUMINUM GUTTER (TYP.).
5. INSTALL 4" x 3" ALUMINUM DOWNSPOUT (TYP.).
6. INSTALL EXHAUST FAN AND LOUVER. REFER TO HVAC DRAWINGS FOR DETAILS OF NEW EXHAUST FAN INSTALLATION. SEE LOUVER DETAIL ON S-10.
7. INSTALL PRECAST CONCRETE SPLASH BLOCK.
8. INSTALL NEW CONCRETE LANDING AND STAIR ON GRADE. SEE DETAIL 3 ON S-10.
9. INFILL EXISTING OPENING WITH CMU AND BRICK TO MATCH EXISTING WALL.
10. INSTALL NEW SODIUM HYPOCHLORITE FILLING STATION.
11. INSTALL NEW REMOVABLE ALUMINUM GUARDRAIL. SEE DETAILS 5/S-9 & 6/S-9
12. INSTALL VINYL SOFFIT.
13. INSTALL FASCIA.

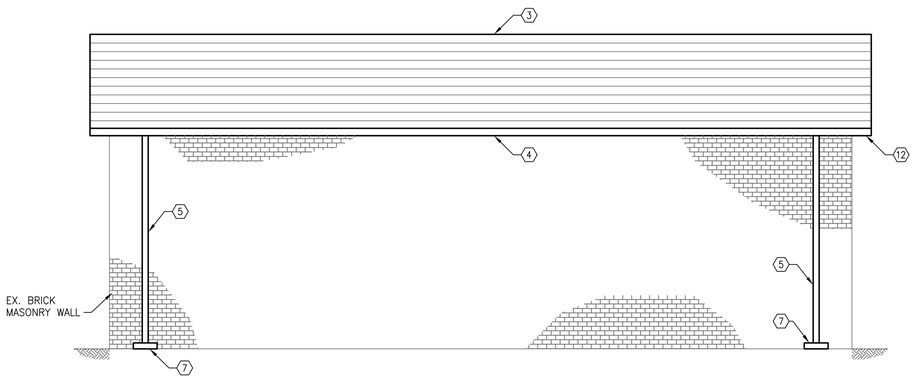

PUMPING STATION – NEW WORK NORTH ELEVATION

SCALE: 1/4" = 1'-0"

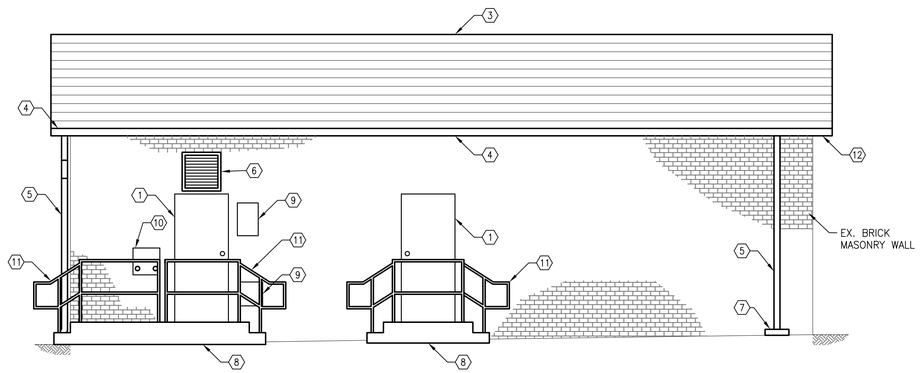

PUMPING STATION – NEW WORK SOUTH ELEVATION

SCALE: 1/4" = 1'-0"

CITY OF BALTIMORE	REVISION – CITY OF BALTIMORE
CHIEF, OFFICE OF ENGINEERING AND CONSTRUCTION — DATE	CHIEF, FACILITIES ENGINEERING SECTION — DATE

SEAL: STATE OF MARYLAND — ISHWAR MARC MERWALAH — No. 21155 — REGISTERED PROFESSIONAL ENGINEER

DATE : 9/17/2020

PROFESSIONAL CERTIFICATION

I HEREBY CERTIFY THAT THESE DOCUMENTS WERE PREPARED OR APPROVED BY ME, AND THAT I AM A DULY LICENSED PROFESSIONAL ENGINEER UNDER THE LAWS OF THE STATE OF MARYLAND.
LICENSE NO. 21155 EXPIRATION DATE 03/13/2022

ENGINEER: CARROLL ENGINEERING
215 SCHILLING CIR. SUITE 102
HUNT VALLEY, MD 21031

AS-BUILT PER RECORD PRINT
BY:
DATE:

DESIGN BY: BJB
DRAWN BY: BAL
CHKD BY: KMM

REVISION	BY	DATE
CONTRACT COMPLETION BOX		

P.W.A. NO.	KEY SHEET	POSITION SHT
–	V-NE	77 NW 5,6
R.O.W NO.		
–		

DRAWING SCALE	
PLAN SCALE:	AS SHOWN
PROFILE SCALE:	N/A
	N/A

BUREAU OF ENGINEERING AND CONSTRUCTION	HIGHWAYS	STRUCTURES	STORM DRAINS	SEWER	WATER	FIELD ENGINEER	BUR. OF ENGINEERING & CONSTRUCTION
SEE DRAWING 2020-0428 FOR ORIGINAL SIGNATURES							

DEPARTMENT OF PUBLIC WORKS: SEE DRAWING 2020-0428 FOR ORIGINAL SIGNATURES

SCALE: 1/4" = 1'-0"

CONTRACT COMPLETION BOX
CONTRACTOR:
DATE COMPLETED:
INSPECTOR:
PIPE MATERIAL (Pressure Only)

DWG. FILENAME:

BALTIMORE COUNTY DEPARTMENT OF PUBLIC WORKS BUREAU OF ENGINEERING & CONSTRUCTION

SPARKS PUMPING STATION

PUMPING STATION – NEW WORK ELEVATIONS

SPARKS WATER PUMPING STATION AND ELEVATED WATER STORAGE TANK IMPROVEMENTS

SUBDIVISION: SPARKS, MD ELECTION DIST. NO.: 8C3

SHEET DESIGNATION	CONTRACT NUMBER
S-5	20094WX0
JOB ORDER NUMBER	
231-203-0035-0514	
SHEET 21 OF 71	
DRAWING NUMBER	
2020-0448	
FILE NO.:	REV. 4/97

GENERAL SHEET NOTES:

1. WORK SHALL BE DONE IN ACCORDANCE WITH APPROVED SEQUENCE OF CONSTRUCTION TO MINIMIZE IMPACT TO STATION OPERATIONS.

SHEET KEYNOTES:

1. INSTALL ALUMINUM GUARDRAILS PER TYPICAL DETAIL 5 ON S-9.
2. INSTALL CONCRETE PIPE SUPPORTS PER TYPICAL DETAIL 2 ON S-10.
3. INSTALL CONCRETE PUMP PAD PER DETAIL 1 ON S-10.
4. INSTALL CONCRETE VALVE SUPPORT PADS PER DETAIL 1 ON S-10
5. INSTALL REMOVABLE ALUMINUM HANDRAILS PER TYPICAL DETAIL 1 AND 2 ON S-11
6. PIPE PENETRATION, SEE DETAIL 1 ON S-12

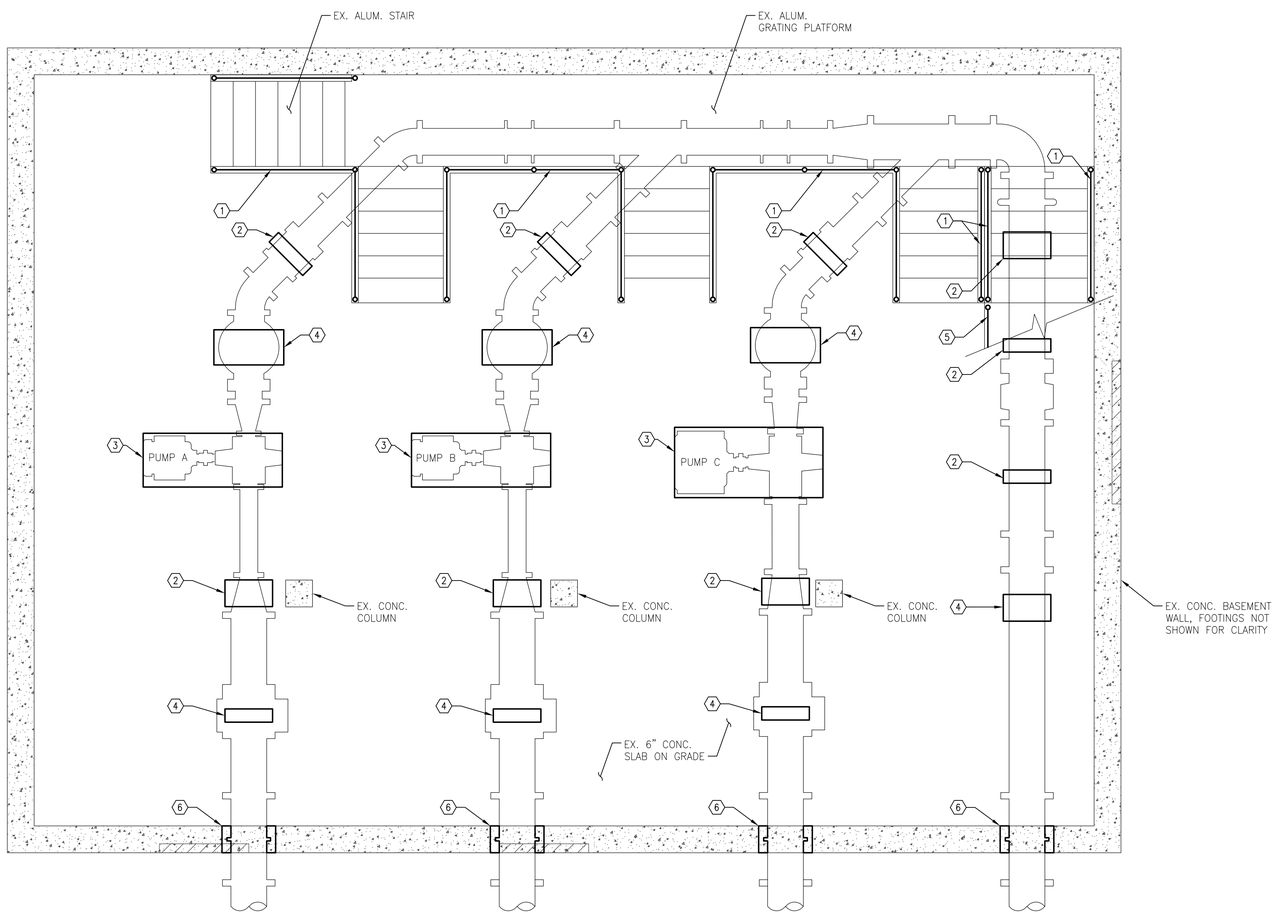

PUMPING STATION – LOWER LEVEL NEW WORK PLAN AT EL 463.50

SCALE: 3/8" = 1'-0"

CITY OF BALTIMORE	REVISION – CITY OF BALTIMORE
CHIEF, OFFICE OF ENGINEERING AND CONSTRUCTION DATE	CHIEF, FACILITIES ENGINEERING SECTION DATE

SEAL

STATE OF MARYLAND — KEVIN MARC MERRIMAN — NO. 21155 — REGISTERED PROFESSIONAL ENGINEER

DATE : 9/17/2020

PROFESSIONAL CERTIFICATION

I HEREBY CERTIFY THAT THESE DOCUMENTS WERE PREPARED OR APPROVED BY ME, AND THAT I AM A DULY LICENSED PROFESSIONAL ENGINEER UNDER THE LAWS OF THE STATE OF MARYLAND.

LICENSE NO. 21155 EXPIRATION DATE 03/13/2022

ENGINEER: CARROLL ENGINEERING
215 SCHILLING CIR. SUITE 102
HUNT VALLEY, MD 21031

AS-BUILT PER RECORD PRINT

BY:
DATE:

DESIGN BY: BJB
DRAWN BY: BAL
CHKD BY: KMM

REVISION	BY	DATE
CONTRACT COMPLETION BOX		

P.W.A. NO.	KEY SHEET	POSITION SHT
–	V-NE	77 NW 5,6
R.O.W NO.		
–		

DRAWING SCALE	
PLAN SCALE:	AS SHOWN
PROFILE SCALE:	N/A
	N/A

DEPARTMENT OF PUBLIC WORKS

SEE DRAWING 2020-0428 FOR ORIGINAL SIGNATURES

BUREAU OF ENGINEERING AND CONSTRUCTION	HIGHWAYS	STRUCTURES	STORM DRAINS	SEWER	WATER	FIELD ENGINEER	BUR. OF ENGINEERING & CONSTRUCTION

SEE DRAWING 2020-0428 FOR ORIGINAL SIGNATURES

1' 0 1' 2' 3'
SCALE: 3/8"= 1'-0"

CONTRACT COMPLETION BOX
CONTRACTOR:
DATE COMPLETED:
INSPECTOR:
PIPE MATERIAL (Pressure Only)

DWG. FILENAME:

BALTIMORE COUNTY DEPARTMENT OF PUBLIC WORKS BUREAU OF ENGINEERING & CONSTRUCTION

SPARKS PUMPING STATION

PUMPING STATION – LOWER LEVEL NEW WORK PLAN

SPARKS WATER PUMPING STATION AND ELEVATED WATER STORAGE TANK IMPROVEMENTS

SUBDIVISION: SPARKS, MD ELECTION DIST. NO.: 8C3

SHEET DESIGNATION	CONTRACT NUMBER
S-6	20094WXO
	JOB ORDER NUMBER
	231-203-0035-0514
	SHEET 22 OF 71
	DRAWING NUMBER
	2020-0449
	FILE NO.:

GENERAL SHEET NOTES:

1. WORK SHALL BE DONE IN ACCORDANCE WITH APPROVED SEQUENCE OF CONSTRUCTION TO MINIMIZE IMPACT TO STATION OPERATIONS.
2. CONTRACTOR SHALL ENSURE THAT SECURITY SYSTEM IS ACTIVE AT ALL TIMES DURING CONSTRUCTION. CONTRACTOR SHALL COORDINATE WITH CITY TO INSTALL SECURITY SYSTEM ON NEW DOORS.

SHEET KEYNOTES:

1. INSTALL REMOVABLE HANDRAIL PER DETAILS 5 AND 6 ON S-9.
2. INSTALL 3'-0" x 7'-0" DOOR PER SCHEDULE ON S-1.
3. INSTALL 5'-0" X 7'-0" DOOR PER SCHEDULE ON S-1.
4. INSTALL STEEL LINTEL PER LINTEL SCHEDULIE ON S-1. SEE MECHANICAL DRAWINGS FOR LOUVER/EXHAUST FAN REQUIREMENTS.
5. INSTALL CONCRETE LANDING AND STAIR ON GRADE PER DETAIL 3 ON S-10. CONTRACTOR SHALL COORDINATE DUCTBANK AND STAIR TURNDOWN TO ENSURE NO CONFLICTS.
6. INFILL EXISTING OPENING WITH CMU AND BRICK TO MATCH EXISTING WALL.
7. PROVIDE ELECTRICAL EQUIPMENT HOUSEKEEPING PAD PER DETAIL 5 ON S-10. COORDINATE PAD SIZE WITH PROVIDED EQUIPMENT.
8. INSTALL NEW SODIUM HYPOCHLORITE FILLING STATION PER MECHANICAL DRAWINGS. SEE DETAIL 3 ON S-11 FOR PIPE PENETRATION THROUGH MASONRY WALL.
9. NEW CONCRETE PAD PER DETAIL 5 ON S-10. COORDINATE SIZE WITH EQUIPMENT MANUFACTURER.
10. NEW CONCRETE CONTAINMENT CURB PER DETAIL 7 ON S-10.
11. 2" MOLDED FIBERGLASS GRATING PLATFORM, SUPPORTS, AND ASSOCIATED HARDWARE, SEE SPECIFICATION 06500. SEE DETAIL 2 ON S-12.
12. FIBERGLASS 6" x 1 11/16"x3/8" CHANNEL (I=14.55 IN^4, S=4.85 IN^3). SEE DETAIL 2 ON S-12.
13. PROVIDE 1/2" COMPRESSIBLE FILL BETWEEN CONCRETE CONTAINMENT CURB AND CONCRETE PAD.
14. FLOOR DRAIN PENETRATION. REFER TO H-3.

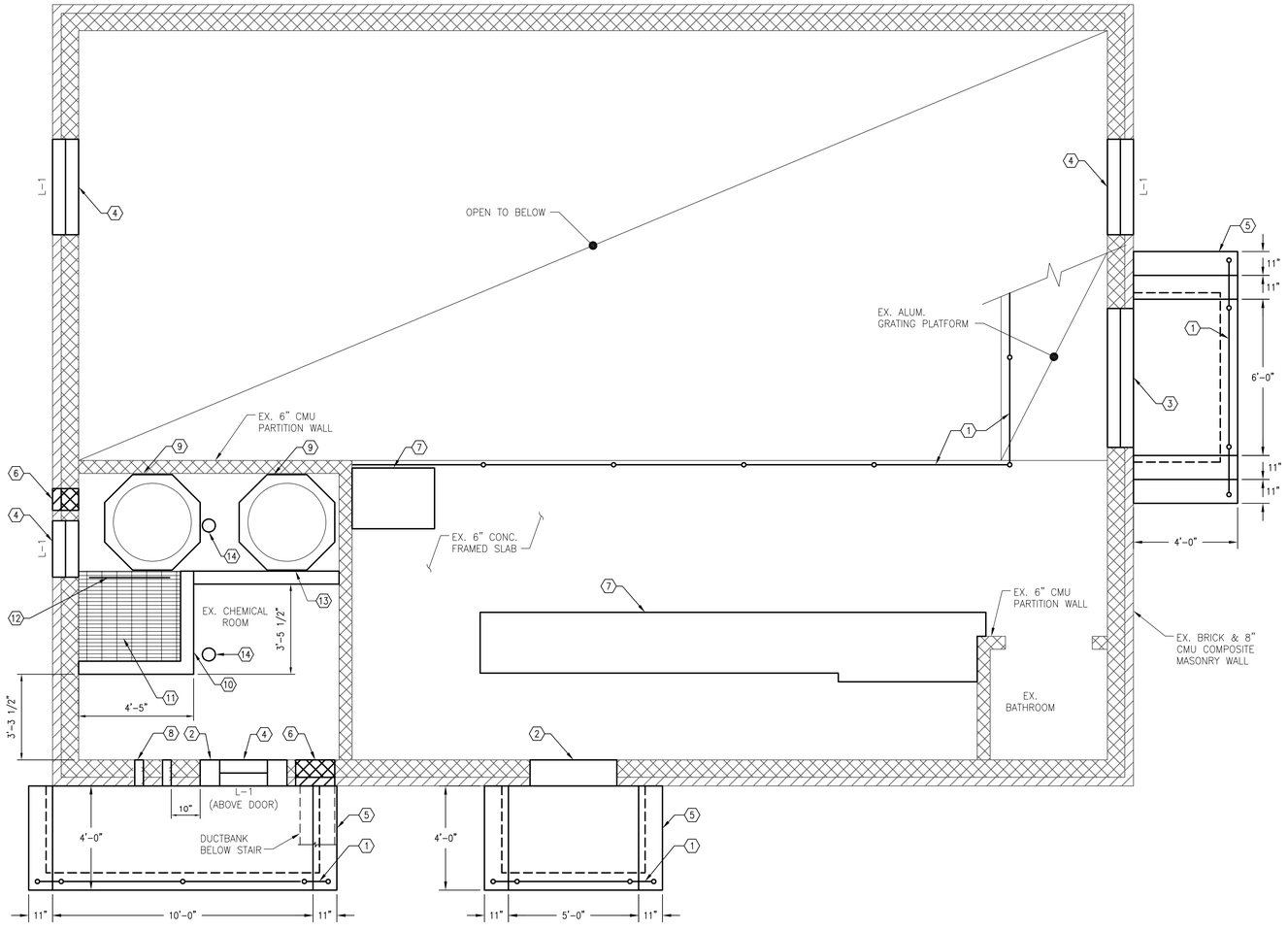

PUMPING STATION – UPPER LEVEL NEW WORK PLAN AT EL 473.50

SCALE: 3/8" = 1'-0"

CITY OF BALTIMORE	REVISION – CITY OF BALTIMORE
CHIEF, OFFICE OF ENGINEERING AND CONSTRUCTION — DATE	CHIEF, FACILITIES ENGINEERING SECTION — DATE

SEAL: STATE OF MARYLAND — RICHARD MARC MERSON — No. 21155 — REGISTERED PROFESSIONAL ENGINEER

DATE: 9/17/2020

PROFESSIONAL CERTIFICATION

I HEREBY CERTIFY THAT THESE DOCUMENTS WERE PREPARED OR APPROVED BY ME, AND THAT I AM A DULY LICENSED PROFESSIONAL ENGINEER UNDER THE LAWS OF THE STATE OF MARYLAND. LICENSE NO. 21155, EXPIRATION DATE 03/13/2022

ENGINEER: CARROLL ENGINEERING
215 SCHILLING CIR. SUITE 102
HUNT VALLEY, MD 21031

AS-BUILT PER RECORD PRINT
BY:
DATE:

DESIGN BY: BJB
DRAWN BY: BAL
CHKD BY: KMM

REVISION	BY	DATE
CONTRACT COMPLETION BOX		

P.W.A. NO.	KEY SHEET	POSITION SHT
–	V-NE	77 NW 5,6
R.O.W NO.		
–		

DRAWING SCALE	
PLAN SCALE:	AS SHOWN
PROFILE SCALE:	N/A
	N/A

DEPARTMENT OF PUBLIC WORKS: SEE DRAWING 2020-0428 FOR ORIGINAL SIGNATURES

BUREAU OF ENGINEERING AND CONSTRUCTION	HIGHWAYS	STRUCTURES	STORM DRAINS	SEWER	WATER	FIELD ENGINEER	BUR. OF ENGINEERING & CONSTRUCTION
SEE DRAWING 2020-0428 FOR ORIGINAL SIGNATURES							

1' 0 1' 2' 3'
SCALE: 3/8"= 1'-0"

CONTRACT COMPLETION BOX

CONTRACTOR:
DATE COMPLETED:
INSPECTOR:
PIPE MATERIAL (Pressure Only)

DWG. FILENAME:

BALTIMORE COUNTY DEPARTMENT OF PUBLIC WORKS BUREAU OF ENGINEERING & CONSTRUCTION

SPARKS PUMPING STATION

PUMPING STATION – UPPER LEVEL NEW WORK PLAN

SPARKS WATER PUMPING STATION AND ELEVATED WATER STORAGE TANK IMPROVEMENTS

SUBDIVISION: SPARKS, MD ELECTION DIST. NO.: 8C3

SHEET DESIGNATION	CONTRACT NUMBER
S-7	20094WXO
JOB ORDER NUMBER	231-203-0035-0514
SHEET 23 OF 71	
DRAWING NUMBER	2020-0450
FILE NO.:	

GENERAL SHEET NOTES:

1. WORK SHALL BE DONE IN ACCORDANCE WITH APPROVED SEQUENCE OF CONSTRUCTION TO MINIMIZE IMPACT TO STATION OPERATIONS.

CRACK REPAIR NOTES:

(1) CONTRACTOR TO FIELD VERIFY EXTENTS AND LOCATIONS OF ALL MASONRY WALL CRACKS. CRACKS SHOWN ARE SCHEMATIC. REPAIR ALL CRACKS PER DETAIL 1 ON S-9.

(2) ROUT HAIRLINE CRACK IN CONCRETE WALL AND FILL WITH ELASTOMETRIC SEALANT.

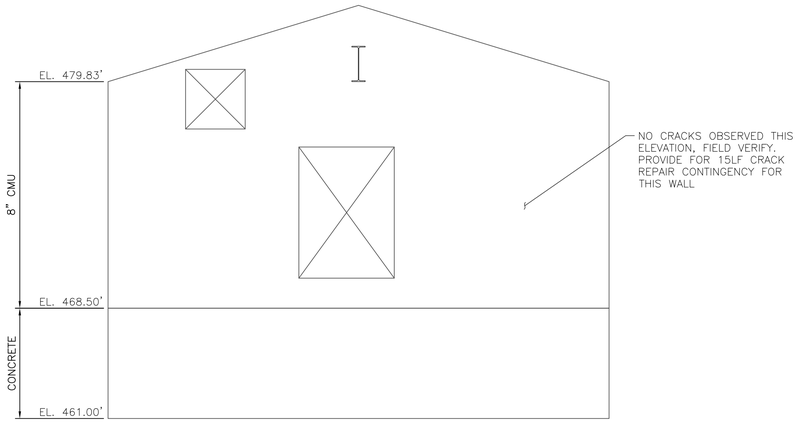

PUMPING STATION – INTERIOR
SCHEMATIC WALL – EAST ELEVATION
SCALE: 1/4" = 1'-0"

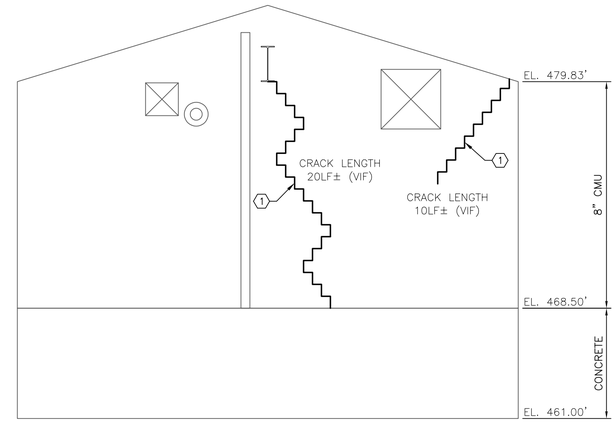

PUMPING STATION – INTERIOR
SCHEMATIC WALL – WEST ELEVATION
SCALE: 1/4" = 1'-0"

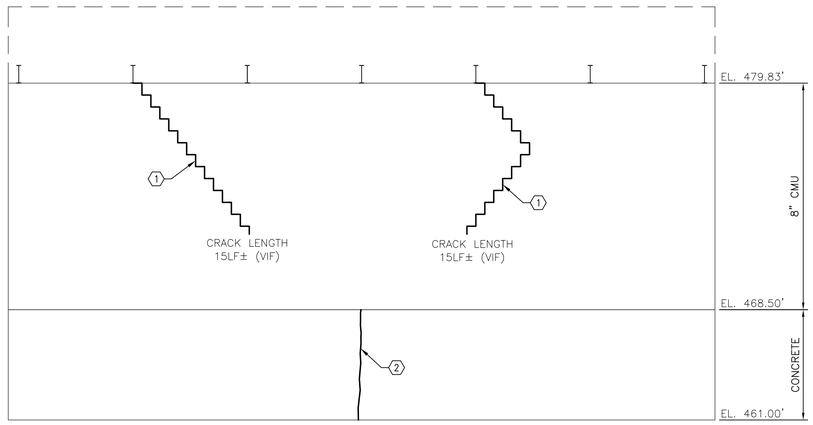

PUMPING STATION – INTERIOR
SCHEMATIC WALL – NORTH ELEVATION
SCALE: 1/4" = 1'-0"

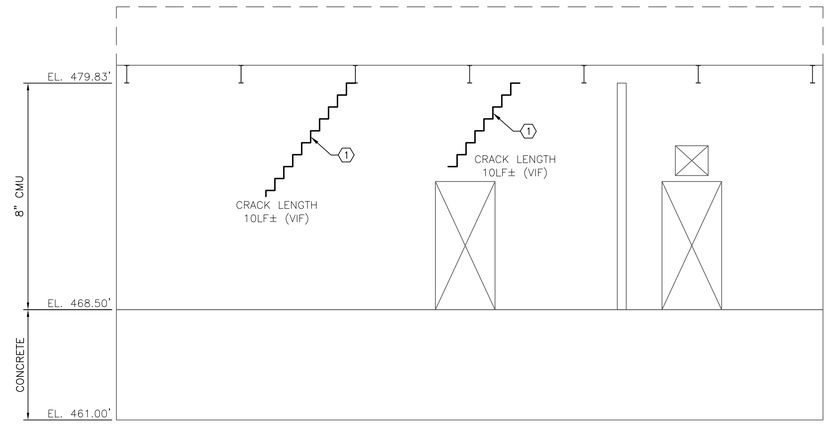

PUMPING STATION – INTERIOR
SCHEMATIC WALL – SOUTH ELEVATION
SCALE: 1/4" = 1'-0"

CITY OF BALTIMORE	REVISION – CITY OF BALTIMORE
CHIEF, OFFICE OF ENGINEERING AND CONSTRUCTION — DATE	CHIEF, FACILITIES ENGINEERING SECTION — DATE

SEAL: STATE OF MARYLAND — MARC MERRIMAN — No. 21155 — REGISTERED PROFESSIONAL ENGINEER

DATE : 9/17/2020

PROFESSIONAL CERTIFICATION

I HEREBY CERTIFY THAT THESE DOCUMENTS WERE PREPARED OR APPROVED BY ME, AND THAT I AM A DULY LICENSED PROFESSIONAL ENGINEER UNDER THE LAWS OF THE STATE OF MARYLAND.
LICENSE NO. 21155 EXPIRATION DATE 03/13/2022

ENGINEER: CARROLL ENGINEERING
215 SCHILLING CIR. SUITE 102
HUNT VALLEY, MD 21031

AS-BUILT PER RECORD PRINT
BY:
DATE:

DESIGN BY: BJB
DRAWN BY: BAL
CHKD BY: KMM

REVISION	BY	DATE
CONTRACT COMPLETION BOX		

P.W.A. NO.	KEY SHEET	POSITION SHT
–	V-NE	77 NW 5,6
R.O.W NO.		
–		

DRAWING SCALE	
PLAN SCALE:	AS SHOWN
PROFILE SCALE:	N/A
	N/A

DEPARTMENT OF PUBLIC WORKS: SEE DRAWING 2020-0428 FOR ORIGINAL SIGNATURES

BUREAU OF ENGINEERING AND CONSTRUCTION	HIGHWAYS	STRUCTURES	STORM DRAINS	SEWER	WATER	FIELD ENGINEER	BUR. OF ENGINEERING & CONSTRUCTION
SEE DRAWING 2020-0428 FOR ORIGINAL SIGNATURES							

CONTRACT COMPLETION BOX
CONTRACTOR:
DATE COMPLETED:
INSPECTOR:
PIPE MATERIAL (Pressure Only)

DWG. FILENAME:

2' 0 2' 4'
SCALE: 1/4"= 1'-0"

BALTIMORE COUNTY DEPARTMENT OF PUBLIC WORKS BUREAU OF ENGINEERING & CONSTRUCTION
SPARKS PUMPING STATION
PUMPING STATION – INTERIOR SCHEMATIC WALL ELEVATIONS
SPARKS WATER PUMPING STATION AND ELEVATED WATER STORAGE TANK IMPROVEMENTS
SUBDIVISION: SPARKS, MD ELECTION DIST. NO.: 8C3

SHEET DESIGNATION	CONTRACT NUMBER
S-8	20094WXO
JOB ORDER NUMBER	231-203-0035-0514
SHEET 24 OF 71	
DRAWING NUMBER	2020-0451
FILE NO.:	REV. 02/17

BALTIMORE COUNTY MARYLAND

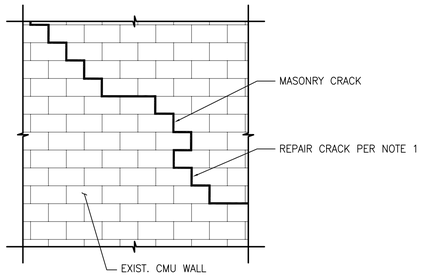

1 / S-9 MASONRY WALL CRACK REPAIR – DETAIL

SCALE: NOT TO SCALE

NOTE:
1. REMOVE LOOSE AND CRACKED MORTAR TO A MINIMUM DEPTH OF 1/2". TUCK POINT CRACKS/JOINTS IN THIN 1/4" MAX. THICK LAYERS WITH TYPE "N" MORTAR TO MATCH THE COLOR OF THE EXISTING MORTAR. ALLOW LAYERS TO BECOME THUMBPRINT HARD BEFORE APPLYING NEXT LAYER. TOOL JOINTS TO A CONCAVE PROFILE.

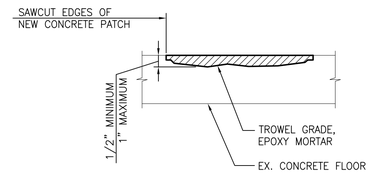

2 / S-9 CONCRETE PARTIAL DEPTH PATCH – DETAIL

SCALE: NOT TO SCALE

NOTES:
1. SAW CUT EDGES OF REGION TO BE PATCHED 1/2". PATCH TO BE RECTANGULAR. REMOVE EXISTING CONCRETE TO SLIGHTLY BELOW (1/2" MINIMUM, 1" MAXIMUM) EXISTING CONCRETE SURFACE. PROVIDE 1/4" MIN. AMPLITUDE ROUGHENED SURFACE FOR MORTAR BOND.
2. CUT REBAR OR ANCHOR BOLTS FLUSH WITH INDENTED CONCRETE SURFACE.
3. BRUSH AREA CLEAN OF DIRT, DEBRIS, AND LOOSE CONCRETE.
4. APPLY EPOXY-MODIFIED BONDING AGENT AND REINFORCEMENT PRIMER TO CONCRETE SURFACE.
5. PATCH CONCRETE TO BE FLUSH WITH ADJOINING EXISTING CONCRETE SURFACE WITH TROWEL GRADE EPOXY CEMENT PATCH MORTAR. FOLLOW MANUFACTURER'S MIXING AND APPLICATION RECOMMENDATIONS.

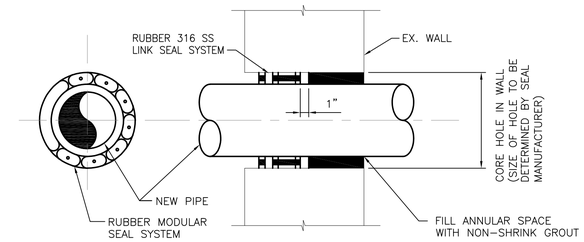

3 / S-9 PIPE PENETRATION AT EXISTING WALL – DETAIL

SCALE: NOT TO SCALE

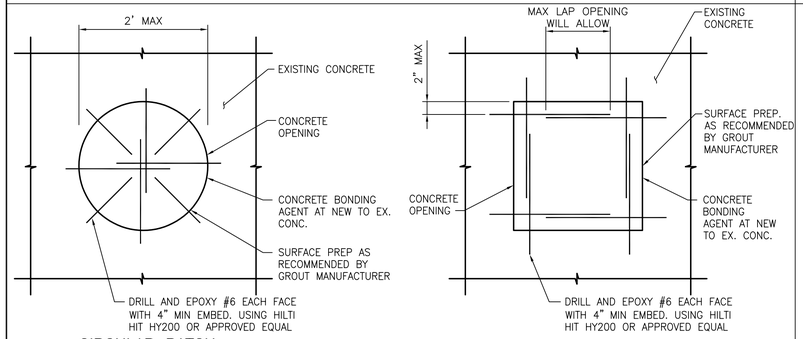

CIRCULAR PATCH

SQUARE PATCH

4 / S-9 CONCRETE FULL DEPTH PATCH – DETAIL

SCALE: NOT TO SCALE

NOTES:
1. FOR OPENING LARGER THAN 6", PATCH TO BE REINFORCED WITH #6@12" TOP AND BOTTOM.
2. THICKNESS OF CONCRETE PATCH TO MATCH EXISTING.

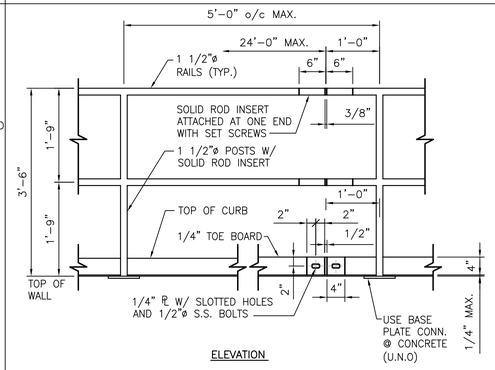

ELEVATION

NOTES:

1. ALL HANDRAIL COMPONENTS SHALL BE ALUMINUM, U.N.O.
2. SEE SPECIFICATIONS FOR ADDITIONAL DESIGN INFORMATION & REQUIREMENTS.
3. THE DESIGN, DETAILS, FABRICATION AND ERECTION OF ALL HANDRAILS SHALL CONFORM WITH REQUIREMENTS OF OSHA STANDARDS, LATEST EDITIONS.
4. SEE MECHANICAL AND ARCHITECTURAL DRAWINGS FOR HANDRAIL AND TOE PLATE LOCATIONS.
5. ALL RAILINGS AND CONNECTIONS WHETHER SHOWN ON MECHANICAL, STRUCTURAL OR ARCHITECTURAL DRAWINGS SHALL CONFORM TO DESIGN REQUIREMENTS OUTLINED IN CONTRACT SPECIFICATION. DETAILS INDICATED ON DRAWINGS ARE SCHEMATIC IN NATURE AND REFLECT 4'-0" MAX. POST SPACING.
6. BACKPAINT ALL ALUMINUM SURFACE IN CONTACT WITH CONCRETE OR MASONRY WITH BITUMINOUS PAINT. SEE SPECS FOR ADDITIONAL INFORMATION AND REQUIREMENTS.
7. ALL WELDED CONNECTION OF RAILINGS SHALL BE COMPLETED IN THE SHOP BY THE MANUFACTURER. NO FIELD WELDING OF ALUMINUM WILL BE PERMITTED.
8. ALL HANDRAIL SHALL BE WELDED CONSTRUCTION.

5 / S-9 TYPICAL ALUMINUM GUARDRAIL – DETAIL

SCALE: NOT TO SCALE

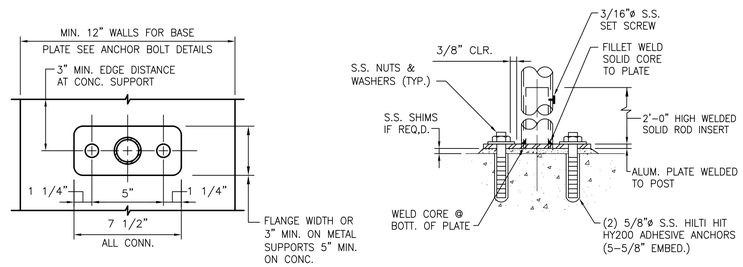

6 / S-9 REMOVABLE ALUMINUM POST TO CONCRETE BASEPLATE – DETAIL

SCALE: NOT TO SCALE

NOTE:
BASEPLATE TO BE USED WHERE STRENGTH OF SUPPORTING MEMBERS WILL BE DESTROYED BY CORE DRILLING, OR USE OF SLEEVES AND FOR BEARING ON STRUCTURAL SHAPES W/MODIFIED BASE PLATE CONN.

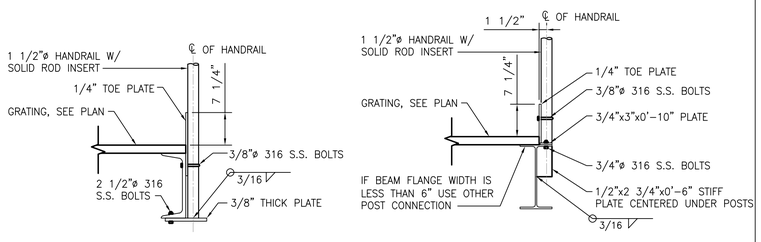

7 / S-9 ALUMINUM POST TO ALUMINUM SHAPE – DETAIL

SCALE: NOT TO SCALE

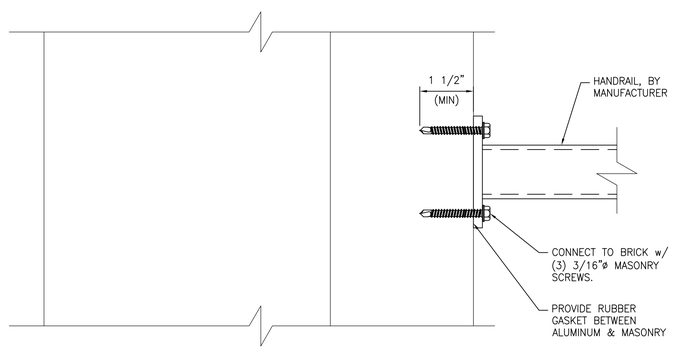

8 / S-9 HANDRAIL ATTACHMENT TO BRICK DETAIL

SCALE: NOT TO SCALE

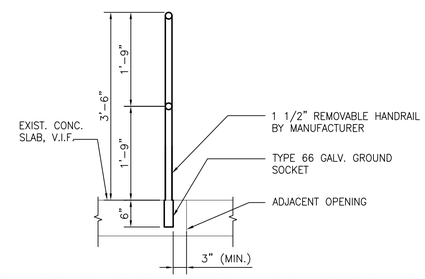

9 / S-9 REMOVABLE HANDRAIL CONNECTION DETAIL

SCALE: NOT TO SCALE

CITY OF BALTIMORE	REVISION – CITY OF BALTIMORE
CHIEF, OFFICE OF ENGINEERING AND CONSTRUCTION — DATE	CHIEF, FACILITIES ENGINEERING SECTION — DATE

CONTRACT COMPLETION BOX
CONTRACTOR:
DATE COMPLETED:
INSPECTOR:
PIPE MATERIAL (Pressure Only)

DWG. FILENAME:

SEAL: STATE OF MARYLAND — MARC MORGAN — No. 21155 — PROFESSIONAL ENGINEER
DATE: 9/17/2020

PROFESSIONAL CERTIFICATION
I HEREBY CERTIFY THAT THESE DOCUMENTS WERE PREPARED OR APPROVED BY ME, AND THAT I AM A DULY LICENSED PROFESSIONAL ENGINEER UNDER THE LAWS OF THE STATE OF MARYLAND.
LICENSE NO. 21155, EXPIRATION DATE 03/13/2022.

ENGINEER: CARROLL ENGINEERING
215 SCHILLING CIR. SUITE 102
HUNT VALLEY, MD 21031

AS-BUILT PER RECORD PRINT
BY:
DATE:

DESIGN BY: BJB
DRAWN BY: BAL
CHKD BY: KMM

REVISION	BY	DATE
CONTRACT COMPLETION BOX		

P.W.A. NO.	KEY SHEET	POSITION SHT
–	V-NE DD-SE	77 NW 5,6 82 NW 5,6
R.O.W NO.		
–		

DRAWING SCALE	
PLAN SCALE:	AS SHOWN
PROFILE SCALE:	N/A
	N/A

DEPARTMENT OF PUBLIC WORKS
SEE DRAWING 2020-0428 FOR ORIGINAL SIGNATURES

BUREAU OF ENGINEERING AND CONSTRUCTION	HIGHWAYS	STRUCTURES	STORM DRAINS	SEWER	WATER	FIELD ENGINEER	BUR. OF ENGINEERING & CONSTRUCTION
SEE DRAWING 2020-0428 FOR ORIGINAL SIGNATURES							

BALTIMORE COUNTY DEPARTMENT OF PUBLIC WORKS BUREAU OF ENGINEERING & CONSTRUCTION

SPARKS PUMPING STATION

PUMPING STATION – STRUCTURAL DETAILS

SPARKS WATER PUMPING STATION AND ELEVATED WATER STORAGE TANK IMPROVEMENTS

SUBDIVISION: SPARKS, MD ELECTION DIST. NO.: 8C3

BALTIMORE COUNTY MARYLAND

SHEET DESIGNATION	CONTRACT NUMBER
S-9	20094WXO
JOB ORDER NUMBER	
231-203-0035-0514	
SHEET 25 OF 71	
DRAWING NUMBER	
2020-0452	
FILE NO.:	REV. 03/17

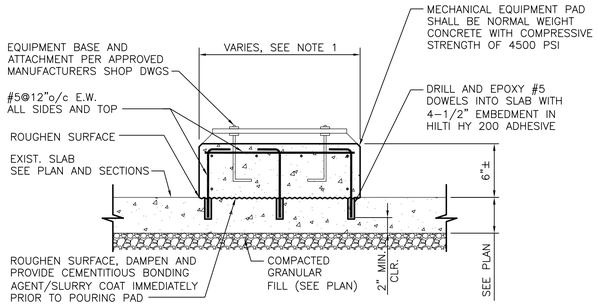

GREATER THAN 4" HEIGHT
(6" TYPICAL)

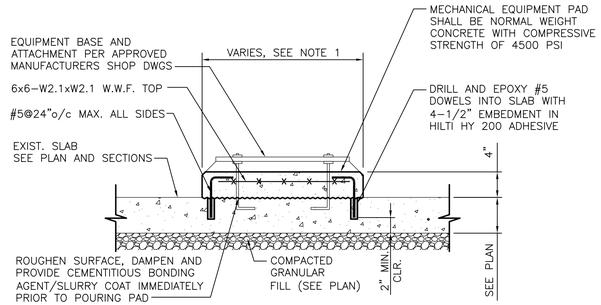

4" OR LESS HEIGHT

1 / S-10 EQUIPMENT PAD – DETAIL

SCALE: NOT TO SCALE

NOTE:
1. COORDINATE EQUIPMENT PAD DIMENSIONS AND LOCATIONS WITH THE PROCESS MECHANICAL DRAWINGS AND WITH THE APPROVED EQUIPMENT MANUFACTURER'S REQUIREMENTS.

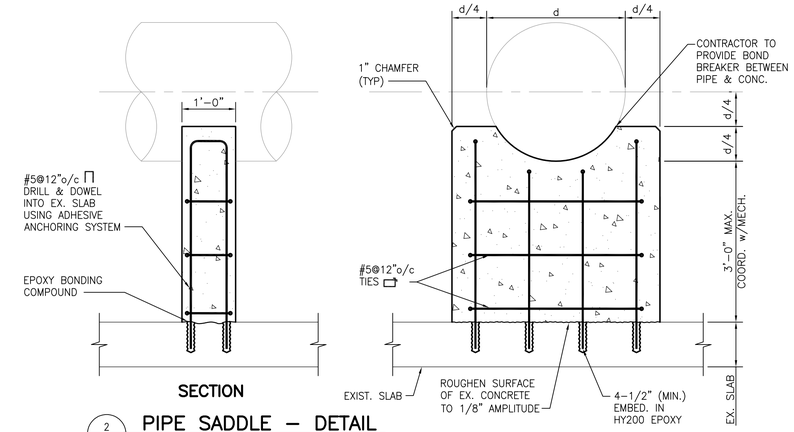

2 / S-10 PIPE SADDLE – DETAIL

SCALE: NOT TO SCALE

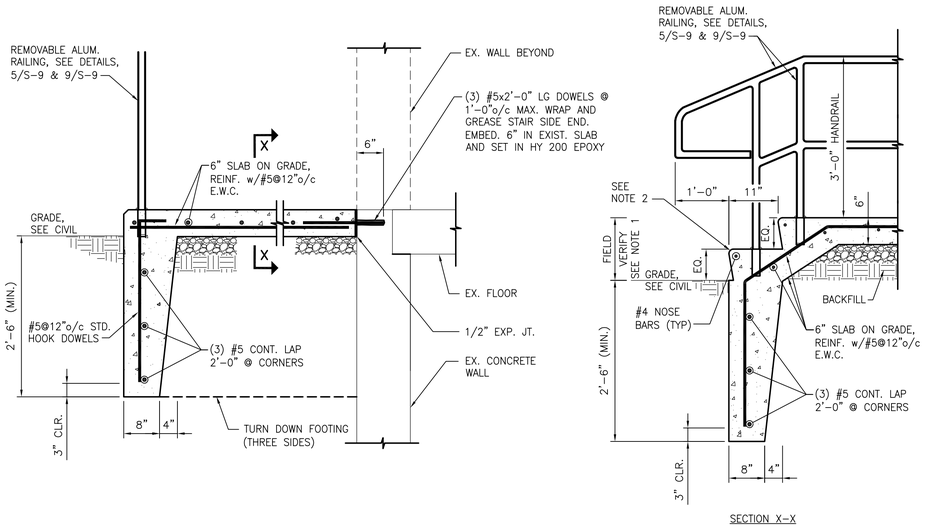

3 / S-10 REAR AND SIDE ENTRY STAIR DETAIL

SCALE: NOT TO SCALE

NOTES:
1. PROVIDE EQUIVALENT HEIGHT RISERS WITH 7" MAXIMUM HEIGHT.
2. PROVIDE 1" RADIUS EDGE ON CONCRETE STAIR.

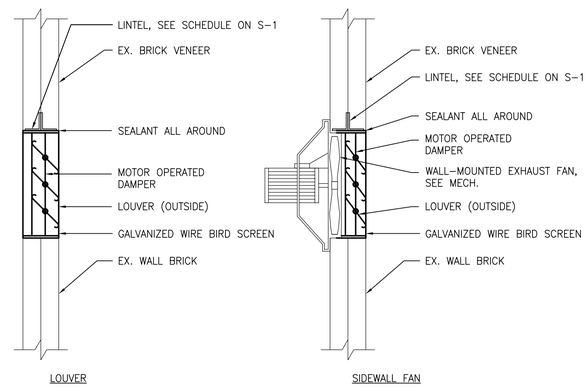

NOTE:
1. PROVIDE 8" MINIMUM BEARING FOR LINTEL EACH SIDE OF OPENING.

4 / S-10 LOUVER INSTALLATION – DETAIL

SCALE: NOT TO SCALE

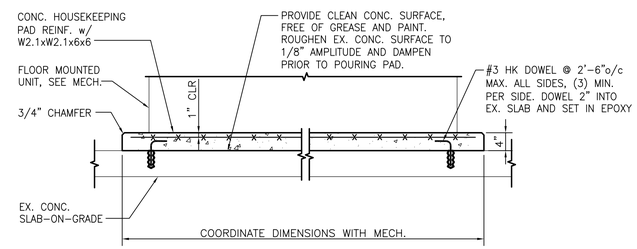

5 / S-10 CONCRETE HOUSEKEEPING PAD – DETAIL

SCALE: NOT TO SCALE

NOTE:
1. SEE MECHANICAL DRAWINGS FOR LOCATIONS AND DIMENSIONS.

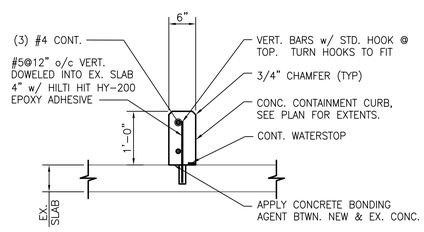

6 / S-10 CONCRETE CONTAINMENT CURB DETAIL

SCALE: NOT TO SCALE

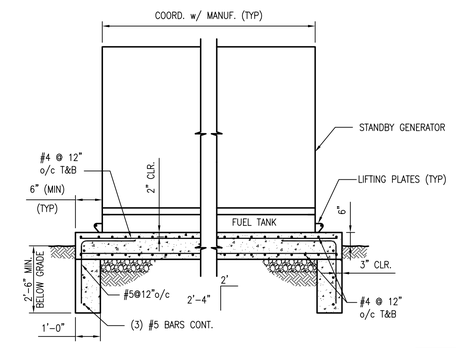

7 / S-10 GENERATOR FOUNDATION – DETAIL

SCALE: NOT TO SCALE

CITY OF BALTIMORE	REVISION – CITY OF BALTIMORE
CHIEF, OFFICE OF ENGINEERING AND CONSTRUCTION — DATE	CHIEF, FACILITIES ENGINEERING SECTION — DATE

CONTRACT COMPLETION BOX
CONTRACTOR:
DATE COMPLETED:
INSPECTOR:
PIPE MATERIAL (Pressure Only)

DWG. FILENAME:

SEAL: STATE OF MARYLAND — MARC MERGLEAN — NO. 21155 — REGISTERED PROFESSIONAL ENGINEER

DATE: 9/17/2020

PROFESSIONAL CERTIFICATION

I HEREBY CERTIFY THAT THESE DOCUMENTS WERE PREPARED OR APPROVED BY ME, AND THAT I AM A DULY LICENSED PROFESSIONAL ENGINEER UNDER THE LAWS OF THE STATE OF MARYLAND.

LICENSE NO. 21155, EXPIRATION DATE 03/13/2022

ENGINEER: CARROLL ENGINEERING
215 SCHILLING CIR. SUITE 102
HUNT VALLEY, MD 21031

AS-BUILT PER RECORD PRINT
BY:
DATE:

DESIGN BY: BJB
DRAWN BY: BAL
CHKD BY: KMM

REVISION	BY	DATE
CONTRACT COMPLETION BOX		

P.W.A. NO.	KEY SHEET	POSITION SHT
–	V-NE DD-SE	77 NW 5,6 82 NW 5,6
R.O.W NO. –		

DRAWING SCALE	
PLAN SCALE:	AS SHOWN
PROFILE SCALE:	N/A / N/A

DEPARTMENT OF PUBLIC WORKS
SEE DRAWING 2020-0428 FOR ORIGINAL SIGNATURES

BUREAU OF ENGINEERING AND CONSTRUCTION	HIGHWAYS	STRUCTURES	STORM DRAINS	SEWER	WATER	FIELD ENGINEER	BUR. OF CONSTRUCTION

SEE DRAWING 2020-0428 FOR ORIGINAL SIGNATURES

BALTIMORE COUNTY DEPARTMENT OF PUBLIC WORKS BUREAU OF ENGINEERING & CONSTRUCTION

SPARKS PUMPING STATION

PUMPING STATION – STRUCTURAL DETAILS

SPARKS WATER PUMPING STATION AND ELEVATED WATER STORAGE TANK IMPROVEMENTS

SUBDIVISION: SPARKS, MD ELECTION DIST. NO.: 8C3

SHEET DESIGNATION	CONTRACT NUMBER
S-10	20094WXO
JOB ORDER NUMBER	231-203-0035-0514
SHEET 26 OF 71	
DRAWING NUMBER	2020-0453
FILE NO.:	REV. 05/01

BALTIMORE COUNTY MARYLAND

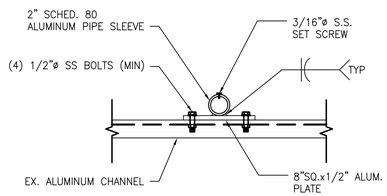

1 / S-11 **REMOVABLE ALUMINUM POST TO ALUMINUM CHANNEL – PLAN DETAIL**

SCALE: NOT TO SCALE

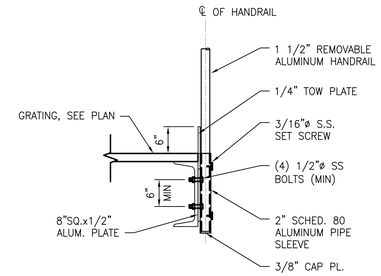

2 / S-11 **REMOVABLE ALUMINUM POST TO ALUMINUM CHANNEL – DETAIL**

SCALE: NOT TO SCALE

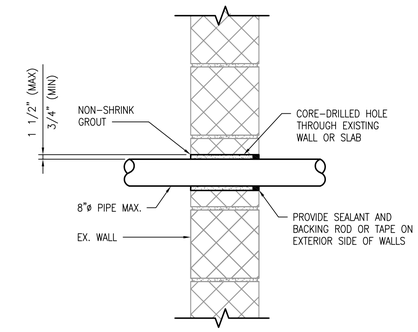

3 / S-11 **PIPE PENETRATION AT EXISTING CMU WALL – DETAIL**

SCALE: NOT TO SCALE

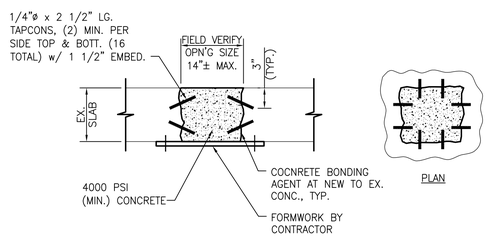

4 / S-11 **CORE DRILLED INFILL DETAIL**

SCALE: NOT TO SCALE

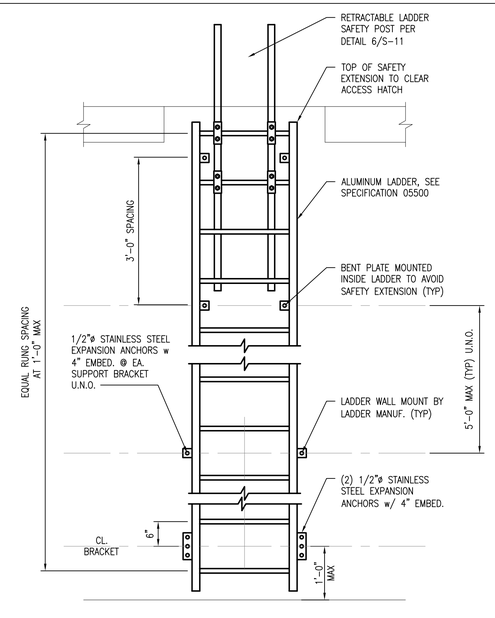

5 / S-11 **ALUMINUM LADDER – DETAIL**

SCALE: NOT TO SCALE

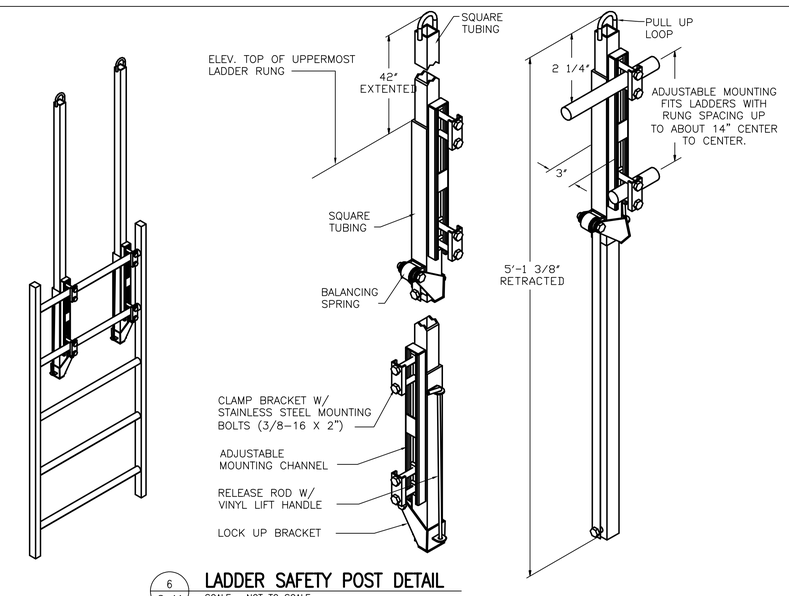

6 / S-11 **LADDER SAFETY POST DETAIL**

SCALE: NOT TO SCALE

NOTES:
1. CLAMP BRACKET MAY BE REVERSED TO ACCOMMODATE RUNG SIZES OF 3/4" TO 1 1/4" WITH STANDARD 2" BOLTS FURNISHED.
2. LADDER SAFETY POST SHALL BE "LADDER-UP" LU-4 BY BILCO OR APPROVED EQUAL
3. PROVIDE TWO "LADDER-UPS" PER FURNISHED LADDER

CONTRACT COMPLETION BOX
CONTRACTOR:
DATE COMPLETED:
INSPECTOR:
PIPE MATERIAL (Pressure Only)

DWG. FILENAME:

CITY OF BALTIMORE	REVISION – CITY OF BALTIMORE
CHIEF, OFFICE OF ENGINEERING AND CONSTRUCTION DATE	CHIEF, FACILITIES ENGINEERING SECTION DATE

SEAL: STATE OF MARYLAND – MARC MESSMAN – No. 21155 – REGISTERED PROFESSIONAL ENGINEER

DATE : 9/17/2020

PROFESSIONAL CERTIFICATION

I HEREBY CERTIFY THAT THESE DOCUMENTS WERE PREPARED OR APPROVED BY ME, AND THAT I AM A DULY LICENSED PROFESSIONAL ENGINEER UNDER THE LAWS OF THE STATE OF MARYLAND.
LICENSE NO. 21155, EXPIRATION DATE 03/13/2022

ENGINEER: CARROLL ENGINEERING
215 SCHILLING CIR. SUITE 102
HUNT VALLEY, MD 21031

AS-BUILT PER RECORD PRINT
BY:
DATE:

DESIGN BY: BJB
DRAWN BY: BAL
CHKD BY: KMM

REVISION	BY	DATE
CONTRACT COMPLETION BOX		

P.W.A. NO.	KEY SHEET	POSITION SHT
–	V-NE DD-SE	77 NW 5,6 82 NW 5,6
R.O.W NO.		
–		

DRAWING SCALE	
PLAN SCALE:	AS SHOWN
PROFILE SCALE:	N/A
	N/A

DEPARTMENT OF PUBLIC WORKS

SEE DRAWING 2020-0428 FOR ORIGINAL SIGNATURES

BUREAU OF ENGINEERING AND CONSTRUCTION	HIGHWAYS	STRUCTURES	STORM DRAINS	SEWER	WATER	FIELD ENGINEER	BUR. OF ENGINEERING & CONSTRUCTION
SEE DRAWING 2020-0428 FOR ORIGINAL SIGNATURES							

BALTIMORE COUNTY DEPARTMENT OF PUBLIC WORKS BUREAU OF ENGINEERING & CONSTRUCTION

SPARKS PUMPING STATION

PUMPING STATION – STRUCTURAL DETAILS

SPARKS WATER PUMPING STATION AND ELEVATED WATER STORAGE TANK IMPROVEMENTS

SUBDIVISION: SPARKS, MD ELECTION DIST. NO.: 8C3

SHEET DESIGNATION	CONTRACT NUMBER
S-11	20094WXO

BALTIMORE COUNTY MARYLAND

JOB ORDER NUMBER 231-203-0035-0514
SHEET 27 OF 71
DRAWING NUMBER 2020-0454
FILE NO.:

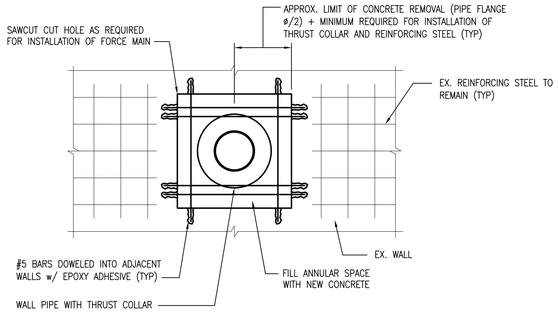

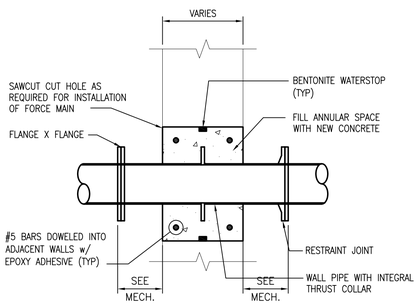

NOTES:

1. SAW CUT FACES OF EXISTING CONCRETE WALL TO A DEPTH OF 1" ALONG THE LIMITS INDICATED.
2. REMOVE CONCRETE WITHIN LIMITS USING HAND HELD TOOLS. CARE SHALL BE TAKEN TO PRESERVE THE CONDITION OF THE EXISTING REINFORCING STEEL.
3. CUT REINFORCING STEEL AS MINIMALLY REQUIRED TO INSTALL THRUST COLLAR. ALL REINFORCING STEEL SHALL BE CLEANED.
4. INSTALL ADDITIONAL #5 BARS AS SHOWN.
5. INSTALL BONDING AGENT AND TWO BEADS OF SIKASWELL S-2 ALONG THE PERIMETER OF THE EXISTING CONCRETE OPENING SURFACE.
6. INSTALL TWO BEADS OF SIKASWELL S-2 ON PIPE.
7. FORM AND FILL OPENING WITH MINIMUM 4,500 PSI CONCRETE.
8. CONCRETE SURFACE SHALL BE PREPARED IN ACCORDANCE WITH WATERSTOP'S MANUFACTURER'S RECOMMENDATION.
9. INSTALL BENTONITE WATERSTOP AROUND OPENING PERIMETER.

1 / S-12 PIPE PENETRATION THROUGH WALL SUCTION AND DISCHARGE PIPING
SCALE: NOT TO SCALE

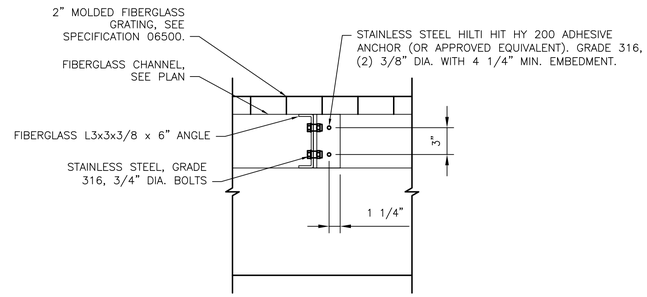

2 / S-12 FIBERGLASS GRATING SUPPORT DETAIL
SCALE: NOT TO SCALE

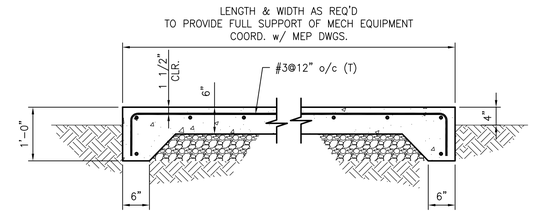

3 / S-12 TYPICAL EXTERIOR EQUIPMENT PAD
SCALE: NOT TO SCALE

CITY OF BALTIMORE	REVISION – CITY OF BALTIMORE
CHIEF, OFFICE OF ENGINEERING AND CONSTRUCTION — DATE	CHIEF, FACILITIES ENGINEERING SECTION — DATE

SEAL: STATE OF MARYLAND — REGISTERED PROFESSIONAL ENGINEER — MARC MERRIMAN — No. 21155
DATE: 9/17/2020

PROFESSIONAL CERTIFICATION: I HEREBY CERTIFY THAT THESE DOCUMENTS WERE PREPARED OR APPROVED BY ME, AND THAT I AM A DULY LICENSED PROFESSIONAL ENGINEER UNDER THE LAWS OF THE STATE OF MARYLAND.
LICENSE NO. 21155 EXPIRATION DATE 03/13/2022

ENGINEER: CARROLL ENGINEERING
215 SCHILLING CIR. SUITE 102
HUNT VALLEY, MD 21031
AS-BUILT PER RECORD PRINT
BY:
DATE:

DESIGN BY: BJB
DRAWN BY: BAL
CHKD BY: KMM

REVISION	BY	DATE
CONTRACT COMPLETION BOX		

P.W.A. NO.	KEY SHEET	POSITION SHT
–	V-NE DD-SE	77 NW 5,6 82 NW 5,6
R.O.W NO.		
–		

DRAWING SCALE	
PLAN SCALE:	AS SHOWN
PROFILE SCALE:	N/A
	N/A

DEPARTMENT OF PUBLIC WORKS: SEE DRAWING 2020-0428 FOR ORIGINAL SIGNATURES

BUREAU OF ENGINEERING AND CONSTRUCTION	HIGHWAYS	STRUCTURES	STORM DRAINS	SEWER	WATER	FIELD ENGINEER	BUR. OF ENGINEERING & CONSTRUCTION
SEE DRAWING 2020-0428 FOR ORIGINAL SIGNATURES							

BALTIMORE COUNTY DEPARTMENT OF PUBLIC WORKS BUREAU OF ENGINEERING & CONSTRUCTION

SPARKS PUMPING STATION

PUMPING STATION – STRUCTURAL DETAILS

SPARKS WATER PUMPING STATION AND ELEVATED WATER STORAGE TANK IMPROVEMENTS

SUBDIVISION: SPARKS, MD ELECTION DIST. NO.: 8C3

CONTRACT COMPLETION BOX
CONTRACTOR:
DATE COMPLETED:
INSPECTOR:
PIPE MATERIAL (Pressure Only)

DWG. FILENAME:

SHEET DESIGNATION	CONTRACT NUMBER
S-12	20094WXO
JOB ORDER NUMBER	231-203-0035-0514
SHEET 28 OF 71	
DRAWING NUMBER	2020-0455
FILE NO.:	REV. 8/17/17

BALTIMORE COUNTY MARYLAND

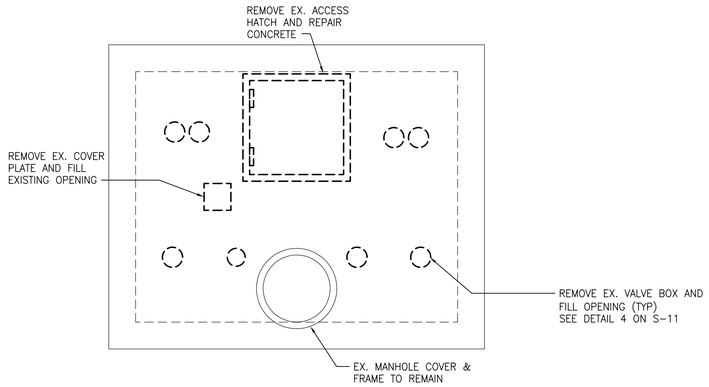

1 S-13 ELEVATED TANK VALVE VAULT TOP SLAB – DEMOLITION PLAN
SCALE: NOT TO SCALE

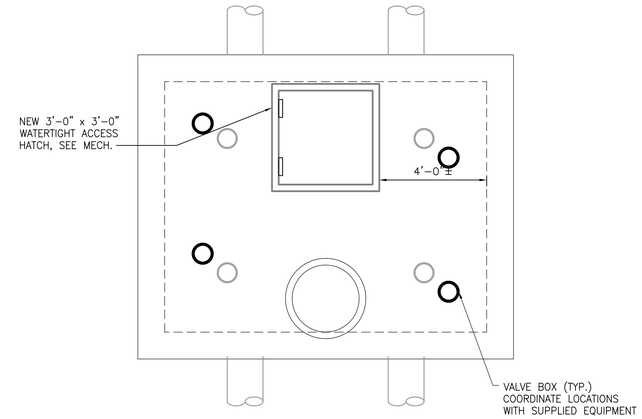

3 S-13 ELEVATED TANK VALVE VAULT TOP SLAB – NEW WORK PLAN
SCALE: NOT TO SCALE

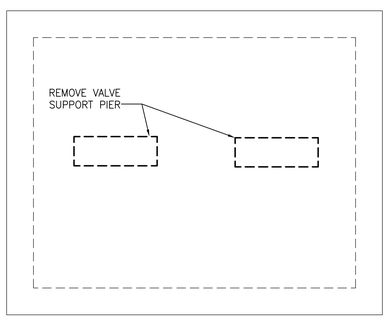

2 S-13 ELEVATED TANK VALVE VAULT BOTTOM SLAB – DEMOLITION PLAN
SCALE: NOT TO SCALE

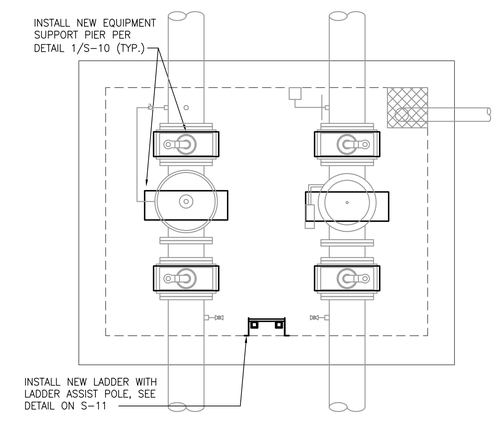

4 S-13 ELEVATED TANK VALVE VAULT BOTTOM SLAB – NEW WORK PLAN
SCALE: NOT TO SCALE

CITY OF BALTIMORE	REVISION – CITY OF BALTIMORE
CHIEF, OFFICE OF ENGINEERING AND CONSTRUCTION DATE	CHIEF, FACILITIES ENGINEERING SECTION DATE

SEAL

STATE OF MARYLAND KEVIN MARC MERRIMAN NO. 21155 REGISTERED PROFESSIONAL ENGINEER

DATE : 9/17/2020

PROFESSIONAL CERTIFICATION

I HEREBY CERTIFY THAT THESE DOCUMENTS WERE PREPARED OR APPROVED BY ME, AND THAT I AM A DULY LICENSED PROFESSIONAL ENGINEER UNDER THE LAWS OF THE STATE OF MARYLAND.

LICENSE NO. 21155, EXPIRATION DATE 03/13/2022

ENGINEER: CARROLL ENGINEERING
215 SCHILLING CIR. SUITE 102
HUNT VALLEY, MD 21031

AS-BUILT PER RECORD PRINT

BY:
DATE:

DESIGN BY: BJB
DRAWN BY: BAL
CHKD BY: KMM

REVISION	BY	DATE
CONTRACT COMPLETION BOX		

P.W.A. NO.	KEY SHEET	POSITION SHT
–	DD-SE	82 NW 5,6
R.O.W NO.		
–		

DRAWING SCALE	
PLAN SCALE:	AS SHOWN
PROFILE SCALE:	N/A
	N/A

DEPARTMENT OF PUBLIC WORKS

SEE DRAWING 2020-0428 FOR ORIGINAL SIGNATURES

BUREAU OF ENGINEERING AND CONSTRUCTION	HIGHWAYS	STRUCTURES	STORM DRAINS	SEWER	WATER	FIELD ENGINEER	BUR. OF ENGINEERING & CONSTRUCTION

SEE DRAWING 2020-0428 FOR ORIGINAL SIGNATURES

BALTIMORE COUNTY DEPARTMENT OF PUBLIC WORKS BUREAU OF ENGINEERING & CONSTRUCTION

SPARKS PUMPING STATION

ELEVATED TANK VALVE VAULT – DEMOLITION AND NEW WORK PLANS

SPARKS WATER PUMPING STATION AND ELEVATED WATER STORAGE TANK IMPROVEMENTS

SUBDIVISION: SPARKS, MD ELECTION DIST. NO.: 8C3

CONTRACT COMPLETION BOX

CONTRACTOR:
DATE COMPLETED:
INSPECTOR:
PIPE MATERIAL (Pressure Only)

DWG. FILENAME:

SHEET DESIGNATION	CONTRACT NUMBER
S-13	20094WXO
	JOB ORDER NUMBER
	231-203-0035-0514
	SHEET 29 OF 71
	DRAWING NUMBER
	2020-0456
	FILE NO.:

BALTIMORE COUNTY MARYLAND

GENERAL SHEET NOTES:

1. CONTRACTOR SHALL NOTIFY THE CITY AT LEAST 30 DAYS PRIOR TO THE START OF DEMOLITION ACTIVITIES RELATED TO CHLORINE EQUIPMENT. SALVAGEABLE EQUIPMENT IN THE CHLORINATION ROOM SHALL BE REMOVED BY THE CITY. ALL REMAINING EQUIPMENT SHALL BE REMOVED BY CONTRACTOR. A TEMPORARY CHLORINATION SYSTEM SHALL BE INSTALLED, TESTED, AND APPROVED PRIOR TO THE REMOVAL OF THE EXISTING CHLORINATION EQUIPMENT. CONTRACTOR SHALL COORDINATE WITH THE CITY AT LEAST 7 DAYS PRIOR TO THE START OF DEMOLITION ACTIVITIES WITHIN PUMPING STATION FOR CITY TO TAG ITEMS TO BE SALVAGED.
2. THE CONTRACTOR IS RESPONSIBLE FOR PROVIDING ALL MEANS FOR ISOLATING THE LINES.
3. REFER TO SPECIFICATION 02412 FOR GENERAL DEMOLITION REQUIREMENTS; SPECIFICALLY, DEMOLITION OF ANY EQUIPMENT SHALL INCLUDE ALL ASSOCIATED INSTRUMENTATION AND ELECTRICAL EQUIPMENT.
4. REFER TO SPECIFICATION 01300 FOR GENERAL SEQUENCING REQUIREMENTS.
5. CONTRACTOR SHALL PROTECT EXISTING SUCTION AND DISCHARGE PRESSURE MANIFOLDS.
6. ALL PIPING SUPPORTS AND ACCESS STAIRS HAVE NOT BEEN SHOWN ON THE DRAWING FOR CLARITY. SEE STRUCTURAL DRAWINGS FOR DETAILS.
7. WORK SHALL BE DONE IN ACCORDANCE WITH APPROVED SEQUENCE OF CONSTRUCTION TO MINIMIZE IMPACT TO STATION OPERATIONS.

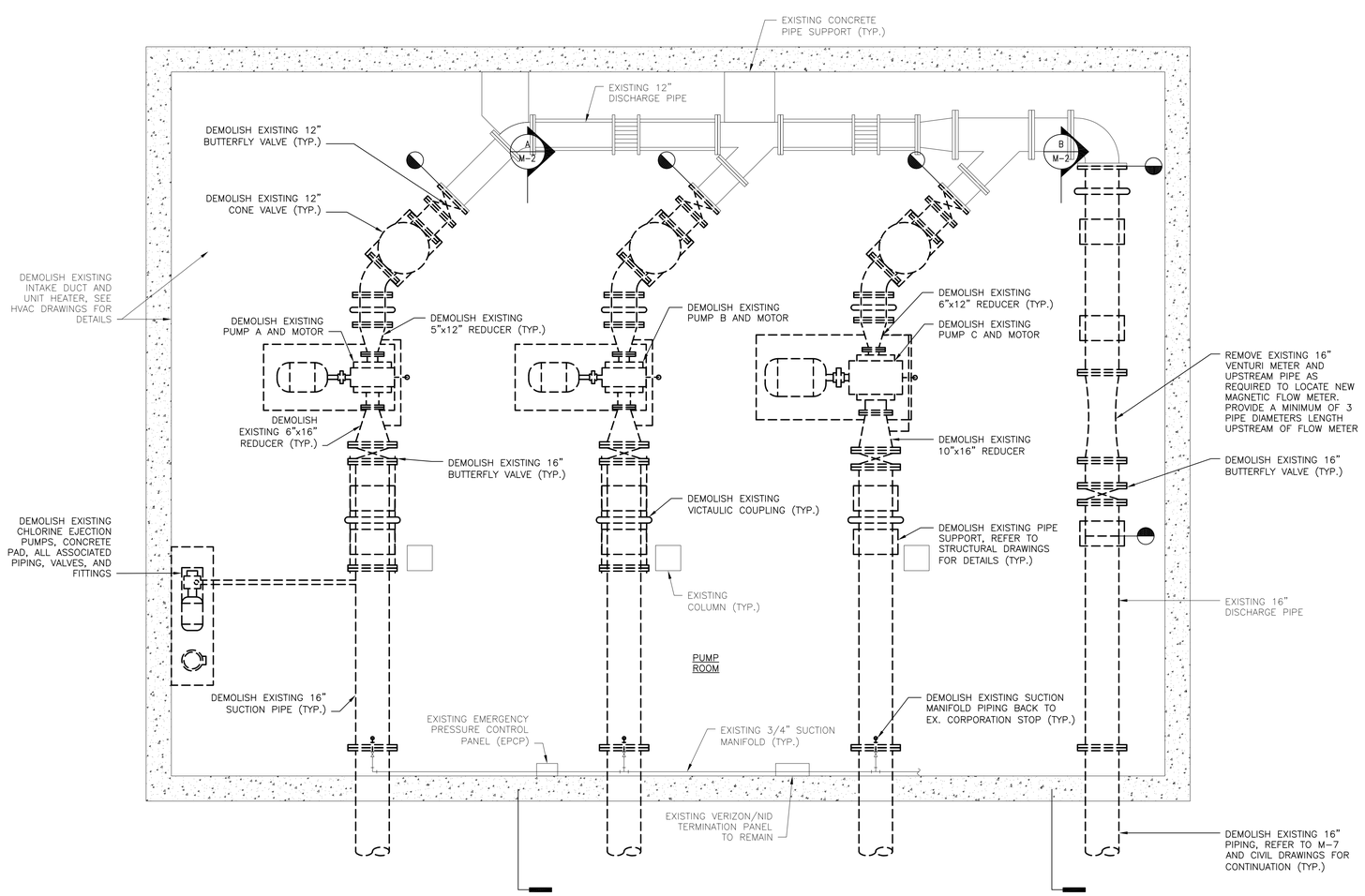

PUMPING STATION – DEMOLITION PLAN AT EL 463.50

SCALE: 3/8" = 1'-0"

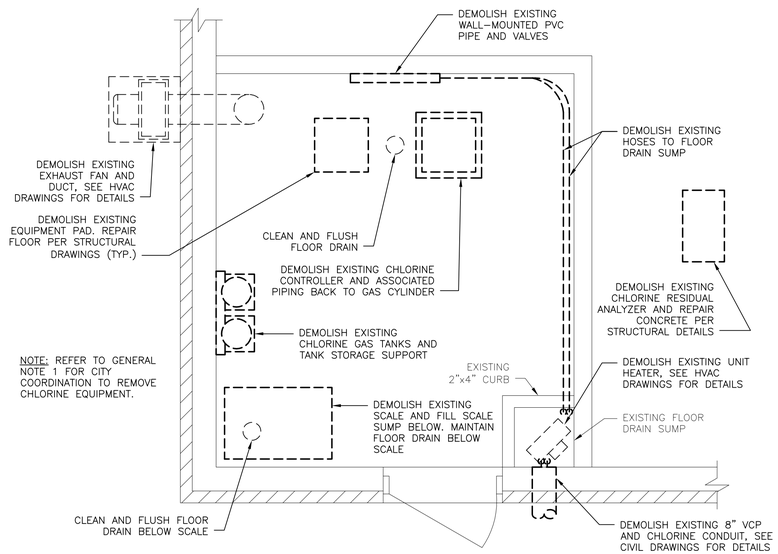

PUMPING STATION – CHEMICAL ROOM DEMOLITION PLAN AT EL. 473.50

SCALE: 1/2" = 1'-0"

1' 0 1' 2'
SCALE: ½" = 1'-0"

1' 0 1' 2' 3'
SCALE: ⅜" = 1'-0"

CITY OF BALTIMORE	REVISION – CITY OF BALTIMORE
CHIEF, OFFICE OF ENGINEERING AND CONSTRUCTION — DATE	CHIEF, FACILITIES ENGINEERING SECTION — DATE

SEAL: STATE OF MARYLAND — DAVID S. COX — No. 31273 — PROFESSIONAL ENGINEER
DATE: 9/17/2020

PROFESSIONAL CERTIFICATION

I HEREBY CERTIFY THAT THESE DOCUMENTS WERE PREPARED OR APPROVED BY ME, AND THAT I AM A DULY LICENSED PROFESSIONAL ENGINEER UNDER THE LAWS OF THE STATE OF MARYLAND.
LICENSE NO. 31273, EXPIRATION DATE 01/16/2021

ENGINEER: JOHNSON, MIRMIRAN & THOMPSON
40 WIGHT AVENUE
HUNT VALLEY, MD 21030

AS-BUILT PER RECORD PRINT
BY:
DATE:

DESIGN BY: DSC
DRAWN BY: GWK
CHKD BY: DSC

REVISION	BY	DATE
CONTRACT COMPLETION BOX		

P.W.A. NO.	KEY SHEET	POSITION SHT
–	V-NE	77 NW 5,6
R.O.W NO.		
–		

DRAWING SCALE	
PLAN SCALE:	AS SHOWN
PROFILE SCALE:	N/A
	N/A

DEPARTMENT OF PUBLIC WORKS
SEE DRAWING 2020-0428 FOR ORIGINAL SIGNATURES

BUREAU OF ENGINEERING AND CONSTRUCTION	HIGHWAYS	STRUCTURES	STORM DRAINS	SEWER	WATER	FIELD ENGINEER	BUR. OF ENGINEERING & CONSTRUCTION
SEE DRAWING 2020-0428 FOR ORIGINAL SIGNATURES							

BALTIMORE COUNTY DEPARTMENT OF PUBLIC WORKS BUREAU OF ENGINEERING & CONSTRUCTION

SPARKS PUMPING STATION

PUMPING STATION – DEMOLITION PLANS

SPARKS WATER PUMPING STATION AND ELEVATED WATER STORAGE TANK IMPROVEMENTS

SUBDIVISION: SPARKS, MD ELECTION DIST. NO.: 8C3

CONTRACT COMPLETION BOX
CONTRACTOR:
DATE COMPLETED:
INSPECTOR:
PIPE MATERIAL (Pressure Only)

DWG. FILENAME:

SHEET DESIGNATION	CONTRACT NUMBER
M-1	20094WXO
JOB ORDER NUMBER	
231-203-0035-0514	
SHEET 30 OF 71	
DRAWING NUMBER	
2020-0457	
FILE NO.:	REV. 07/17

BALTIMORE COUNTY MARYLAND

GENERAL SHEET NOTES:

1. CONTRACTOR SHALL NOTIFY THE CITY AT LEAST 30 DAYS PRIOR TO THE START OF DEMOLITION ACTIVITIES RELATED TO CHLORINE EQUIPMENT. SALVAGEABLE EQUIPMENT IN THE CHLORINATION ROOM SHALL BE REMOVED BY THE CITY. ALL REMAINING EQUIPMENT SHALL BE REMOVED BY CONTRACTOR. A TEMPORARY CHLORINATION SYSTEM SHALL BE INSTALLED, TESTED, AND APPROVED PRIOR TO THE REMOVAL OF THE EXISTING CHLORINATION EQUIPMENT. CONTRACTOR SHALL COORDINATE WITH THE CITY AT LEAST 7 DAYS PRIOR TO THE START OF DEMOLITION ACTIVITIES WITHIN PUMPING STATION FOR CITY TO TAG ITEMS TO BE SALVAGED.
2. ONLY PUMP B IS SHOWN FOR CLARITY. WORK SHOWN IN SECTION IS INTENDED TO BE TYPICAL FOR ALL PUMPS, VALVES, AND PIPING.
3. WORK SHALL BE DONE IN ACCORDANCE WITH APPROVED SEQUENCE OF CONSTRUCTION TO MINIMIZE IMPACT TO STATION OPERATIONS.
4. MCC AND TOP FLOOR EQUIPMENT NOT SHOWN FOR CLARITY.

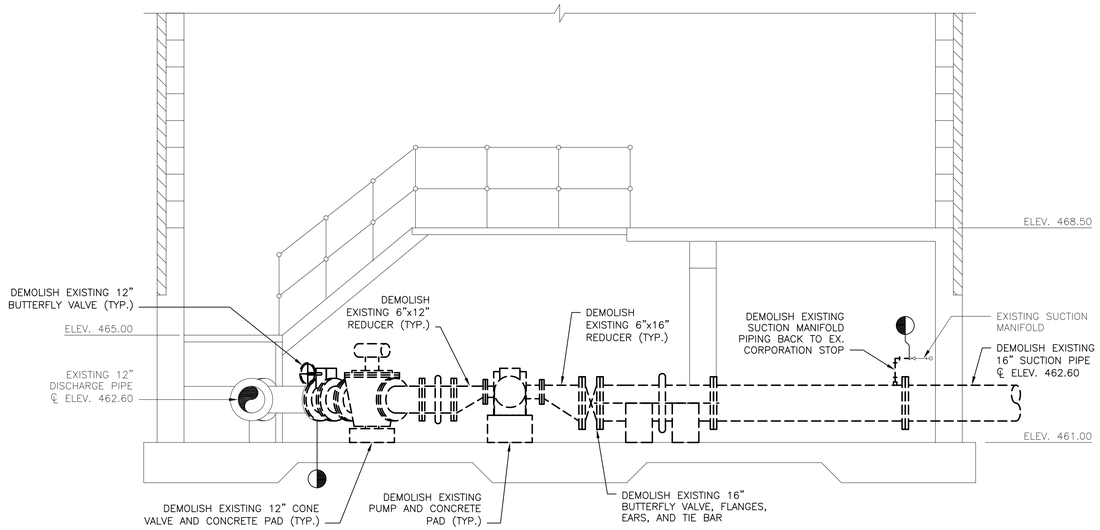

A / M-1 PUMPING STATION – TYPICAL DEMOLITION SECTION
SCALE: 3/8" = 1'-0"

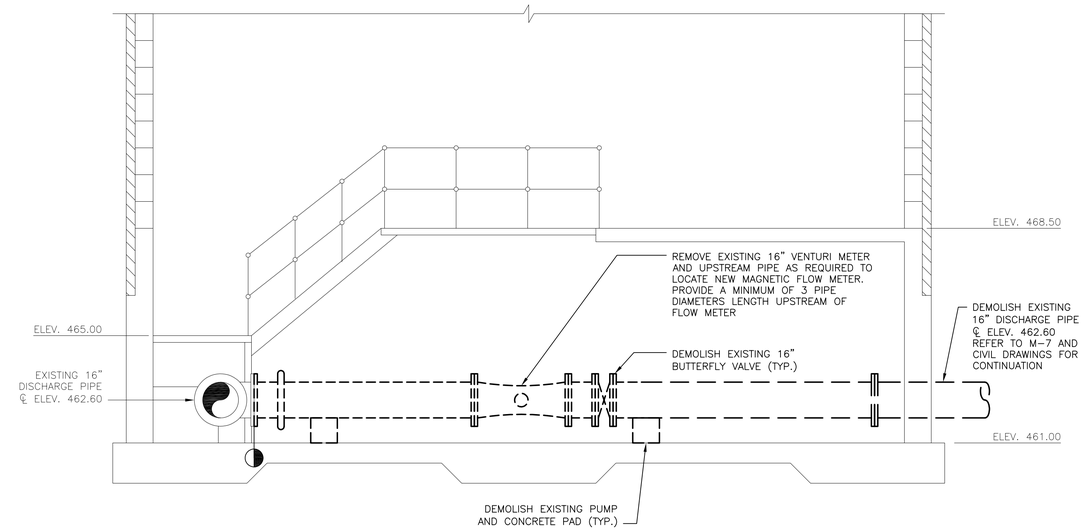

B / M-1 PUMPING STATION – TYPICAL DEMOLITION SECTION
SCALE: 3/8" = 1'-0"

1' 0 1' 2' 3'
SCALE: 3/8" = 1'-0"

CITY OF BALTIMORE	REVISION – CITY OF BALTIMORE
CHIEF, OFFICE OF ENGINEERING AND CONSTRUCTION — DATE	CHIEF, FACILITIES ENGINEERING SECTION — DATE

SEAL: STATE OF MARYLAND — DAVID S. COX — No. 31273 — PROFESSIONAL ENGINEER

DATE: 9/17/2020

PROFESSIONAL CERTIFICATION

I HEREBY CERTIFY THAT THESE DOCUMENTS WERE PREPARED OR APPROVED BY ME, AND THAT I AM A DULY LICENSED PROFESSIONAL ENGINEER UNDER THE LAWS OF THE STATE OF MARYLAND.
LICENSE NO. 31273, EXPIRATION DATE 01/16/2021.

ENGINEER: JOHNSON, MIRMIRAN & THOMPSON
40 WIGHT AVENUE
HUNT VALLEY, MD 21030

AS-BUILT PER RECORD PRINT
BY:
DATE:

DESIGN BY: DSC
DRAWN BY: GWK
CHKD BY: DSC

REVISION	BY	DATE
CONTRACT COMPLETION BOX		

P.W.A. NO.	KEY SHEET	POSITION SHT
–	V-NE	77 NW 5,6
R.O.W NO.		
–		

DRAWING SCALE	
PLAN SCALE:	AS SHOWN
PROFILE SCALE:	N/A
	N/A

DEPARTMENT OF PUBLIC WORKS: SEE DRAWING 2020-0428 FOR ORIGINAL SIGNATURES

BUREAU OF ENGINEERING AND CONSTRUCTION	HIGHWAYS	STRUCTURES	STORM DRAINS	SEWER	WATER	FIELD ENGINEER	BUR. OF ENGINEERING & CONSTRUCTION
SEE DRAWING 2020-0428 FOR original SIGNATURES							

BALTIMORE COUNTY DEPARTMENT OF PUBLIC WORKS BUREAU OF ENGINEERING & CONSTRUCTION

SPARKS PUMPING STATION

PUMPING STATION – DEMOLITION SECTIONS

SPARKS WATER PUMPING STATION AND ELEVATED WATER STORAGE TANK IMPROVEMENTS

SUBDIVISION: SPARKS, MD ELECTION DIST. NO.: 8C3

CONTRACT COMPLETION BOX
CONTRACTOR:
DATE COMPLETED:
INSPECTOR:
PIPE MATERIAL (Pressure Only)

DWG. FILENAME:

SHEET DESIGNATION	CONTRACT NUMBER
M-2	20094WXO
JOB ORDER NUMBER	231-203-0035-0514
SHEET 31 OF 71	
DRAWING NUMBER	2020-0458
FILE NO.:	REV. 05/09

BALTIMORE COUNTY MARYLAND

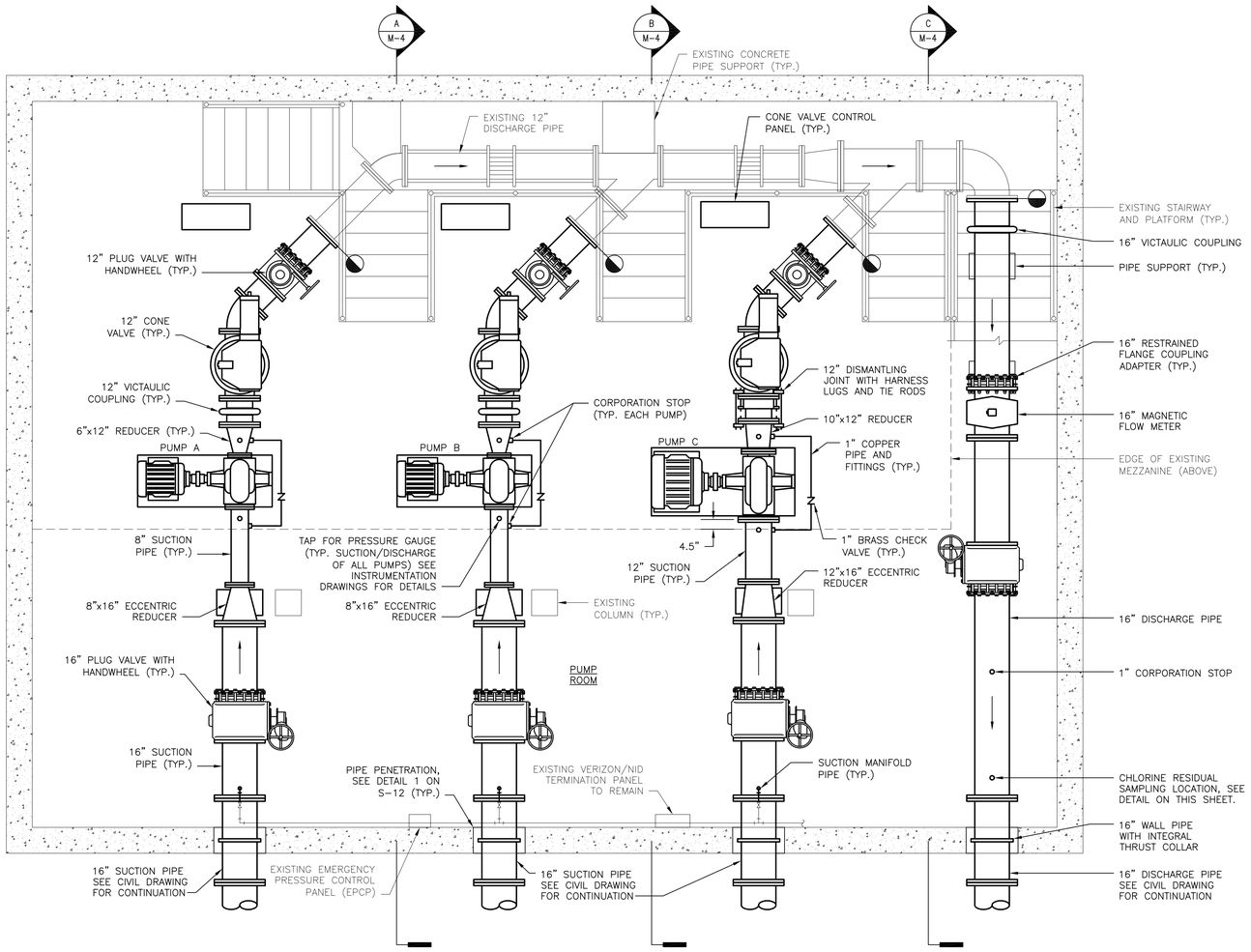

PUMPING STATION – NEW WORK PLAN AT EL 463.50

SCALE: 3/8" = 1'-0"

GENERAL SHEET NOTES:

1. ALL PIPING SUPPORTS, WALKWAYS, AND ACCESS STAIRS HAVE NOT BEEN SHOWN ON THE DRAWING FOR CLARITY. SEE STRUCTURAL DRAWINGS FOR DETAILS.
2. CLEAN, PREP, AND RE-PAINT ALL EXISTING PIPING AND FITTINGS.
3. WORK SHALL BE DONE IN ACCORDANCE WITH APPROVED SEQUENCE OF CONSTRUCTION TO MINIMIZE IMPACT TO STATION OPERATIONS.
4. REFER TO INSTRUMENTATION DRAWINGS FOR INSTRUMENT LOCATIONS.
5. CONTRACTOR SHALL CONFIRM PIPE FLANGE CLASSES PRIOR TO COMMENCING WORK. ANY ADAPTERS OR OTHER DEVICES REQUIRED TO MATE TO EXISTING FLANGES SHALL BE PROVIDED BY THE CONTRACTOR.
6. PLUG VALVE SEAT SHALL BE ON THE PUMP SIDE OF THE VALVE.

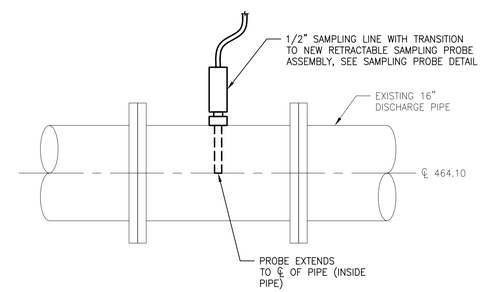

CHLORINE RESIDUAL SAMPLING LOCATION – DETAIL

SCALE: NOT TO SCALE

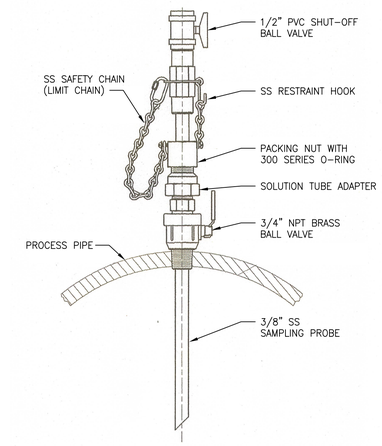

SAMPLING PROBE DETAIL

CITY OF BALTIMORE	REVISION – CITY OF BALTIMORE
CHIEF, OFFICE OF ENGINEERING AND CONSTRUCTION DATE	CHIEF, FACILITIES ENGINEERING SECTION DATE

SEAL: STATE OF MARYLAND – DAVID S. COX – No. 31273 – PROFESSIONAL ENGINEER

DATE: 9/17/2020

PROFESSIONAL CERTIFICATION

I HEREBY CERTIFY THAT THESE DOCUMENTS WERE PREPARED OR APPROVED BY ME, AND THAT I AM A DULY LICENSED PROFESSIONAL ENGINEER UNDER THE LAWS OF THE STATE OF MARYLAND.
LICENSE NO. 31273, EXPIRATION DATE 01/16/2021

ENGINEER: JOHNSON, MIRMIRAN & THOMPSON
40 WIGHT AVENUE
HUNT VALLEY, MD 21030

AS-BUILT PER RECORD PRINT
BY:
DATE:

DESIGN BY: DSC
DRAWN BY: GWK
CHKD BY: DSC

REVISION	BY	DATE
CONTRACT COMPLETION BOX		

P.W.A. NO.	KEY SHEET	POSITION SHT
–	V-NE	77 NW 5,6
R.O.W NO.		
–		

DRAWING SCALE	
PLAN SCALE:	AS SHOWN
PROFILE SCALE:	N/A
	N/A

DEPARTMENT OF PUBLIC WORKS: SEE DRAWING 2020-0428 FOR ORIGINAL SIGNATURES

BUREAU OF ENGINEERING AND CONSTRUCTION	HIGHWAYS	STRUCTURES	STORM DRAINS	SEWER	WATER	FIELD ENGINEER	BUR. OF ENGINEERING & CONSTRUCTION
SEE DRAWING 2020-0428 FOR ORIGINAL SIGNATURES							

CONTRACT COMPLETION BOX
CONTRACTOR:
DATE COMPLETED:
INSPECTOR:
PIPE MATERIAL (Pressure Only)
DWG. FILENAME:

1' 0 1' 2' 3'
SCALE: 3/8" = 1'-0"

BALTIMORE COUNTY DEPARTMENT OF PUBLIC WORKS BUREAU OF ENGINEERING & CONSTRUCTION

SPARKS PUMPING STATION

PUMPING STATION – NEW WORK PLAN AND DETAIL

SPARKS WATER PUMPING STATION AND ELEVATED WATER STORAGE TANK IMPROVEMENTS

SUBDIVISION: SPARKS, MD ELECTION DIST. NO.: 8C3

SHEET DESIGNATION	CONTRACT NUMBER
M-3	20094WXO
JOB ORDER NUMBER	231-203-0035-0514
SHEET 32 OF 71	
DRAWING NUMBER	2020-0459
FILE NO.:	REV. 4/17/17

GENERAL SHEET NOTES:

1. ALL PIPING SUPPORTS AND ACCESS STAIRS HAVE NOT BEEN SHOWN ON THE DRAWING FOR CLARITY. SEE STRUCTURAL DRAWINGS FOR DETAILS.
2. THE STRAIGHT LENGTH ON THE DRAWINGS IS BASED ON HI REQUIREMENTS FOR THE BASIS OF DESIGN PUMP AS LISTED WITHIN SPECIFICATION 11300. THE CONTRACTOR SHALL COORDINATE STRAIGHT PIPE LENGTH IN FRONT OF PUMP WITH THE PROVIDED MANUFACTURER TO ENSURE HI STANDARDS ARE FULLY MET.
3. WORK SHALL BE DONE IN ACCORDANCE WITH APPROVED SEQUENCE OF CONSTRUCTION TO MINIMIZE IMPACT TO STATION OPERATIONS.
4. MCC, CONE VALVE CONTROL PANEL, AND TOP FLOOR EQUIPMENT NOT SHOWN FOR CLARITY.

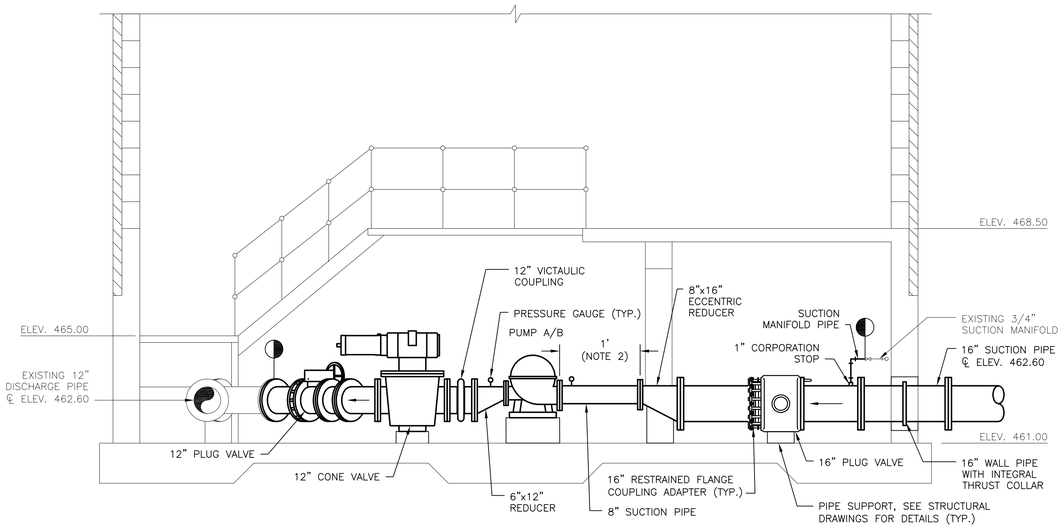

A M-3 PUMPING STATION – NEW WORK SECTION (TYP. OF PUMP A/B)
SCALE: 3/8" = 1'-0"

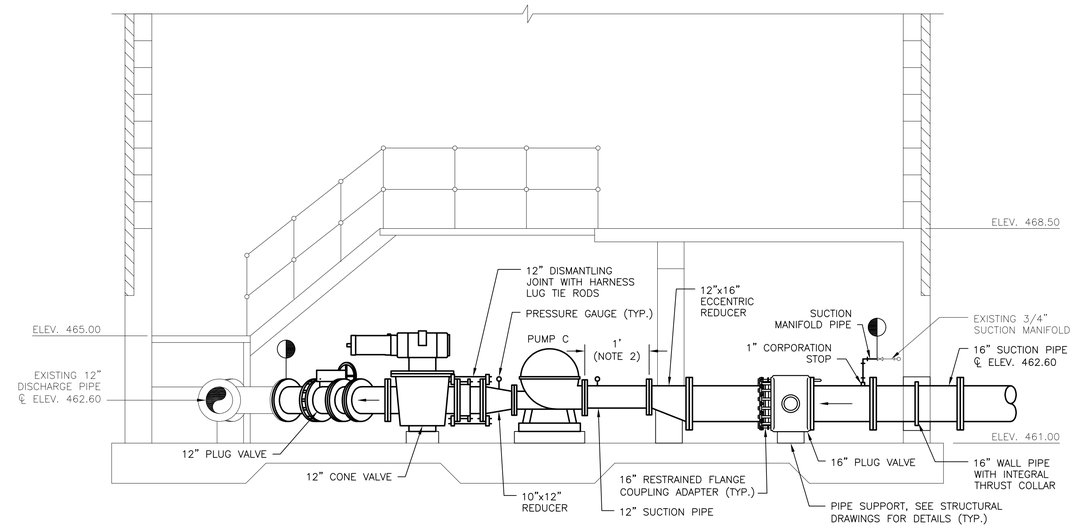

B M-3 PUMPING STATION – NEW WORK SECTION (TYP. OF PUMP C)
SCALE: 3/8" = 1'-0"

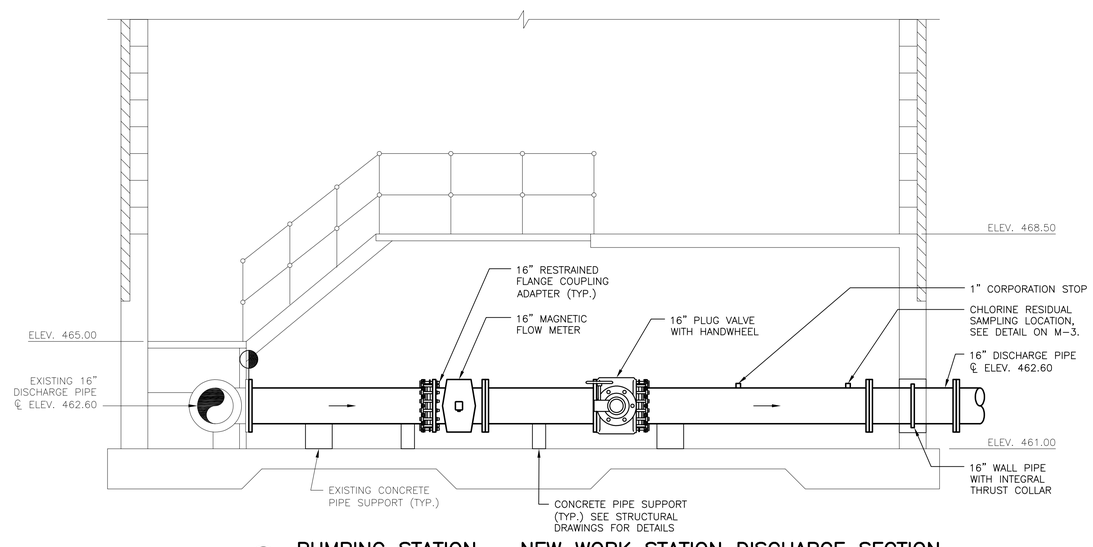

C M-3 PUMPING STATION – NEW WORK STATION DISCHARGE SECTION
SCALE: 3/8" = 1'-0"

1' 0 1' 2' 3'
SCALE: 3/8" = 1'-0"

CITY OF BALTIMORE	REVISION – CITY OF BALTIMORE
CHIEF, OFFICE OF ENGINEERING AND CONSTRUCTION — DATE	CHIEF, FACILITIES ENGINEERING SECTION — DATE

SEAL: STATE OF MARYLAND — DAVID S. COX — No. 31273 — PROFESSIONAL ENGINEER
DATE: 9/17/2020

PROFESSIONAL CERTIFICATION
I HEREBY CERTIFY THAT THESE DOCUMENTS WERE PREPARED OR APPROVED BY ME, AND THAT I AM A DULY LICENSED PROFESSIONAL ENGINEER UNDER THE LAWS OF THE STATE OF MARYLAND.
LICENSE NO. 31273, EXPIRATION DATE 01/16/2021.
ENGINEER: JOHNSON, MIRMIRAN & THOMPSON
40 WIGHT AVENUE
HUNT VALLEY, MD 21030
AS-BUILT PER RECORD PRINT
BY:
DATE:
DESIGN BY: DSC
DRAWN BY: GWK
CHKD BY: DSC

REVISION	BY	DATE
CONTRACT COMPLETION BOX		

P.W.A. NO.	KEY SHEET	POSITION SHT
–	V-NE	77 NW 5,6
R.O.W NO.		
–		

DRAWING SCALE	
PLAN SCALE:	AS SHOWN
PROFILE SCALE:	N/A
	N/A

DEPARTMENT OF PUBLIC WORKS
SEE DRAWING 2020-0428 FOR ORIGINAL SIGNATURES

BUREAU OF ENGINEERING AND CONSTRUCTION	HIGHWAYS	STRUCTURES	STORM DRAINS	SEWER	WATER	FIELD ENGINEER	BUR. OF ENGINEERING & CONSTRUCTION
SEE DRAWING 2020-0428 FOR ORIGINAL SIGNATURES							

BALTIMORE COUNTY DEPARTMENT OF PUBLIC WORKS BUREAU OF ENGINEERING & CONSTRUCTION
SPARKS PUMPING STATION
PUMPING STATION – NEW WORK SECTIONS
SPARKS WATER PUMPING STATION AND ELEVATED WATER STORAGE TANK IMPROVEMENTS
SUBDIVISION: SPARKS, MD ELECTION DIST. NO.: 8C3

CONTRACT COMPLETION BOX
CONTRACTOR:
DATE COMPLETED:
INSPECTOR:
PIPE MATERIAL (Pressure Only)

DWG. FILENAME:

SHEET DESIGNATION	CONTRACT NUMBER
M-4	20094WXO
JOB ORDER NUMBER	
231-203-0035-0514	
SHEET 33 OF 71	
DRAWING NUMBER	
2020-0460	
FILE NO.:	REV. 02/17

BALTIMORE COUNTY MARYLAND

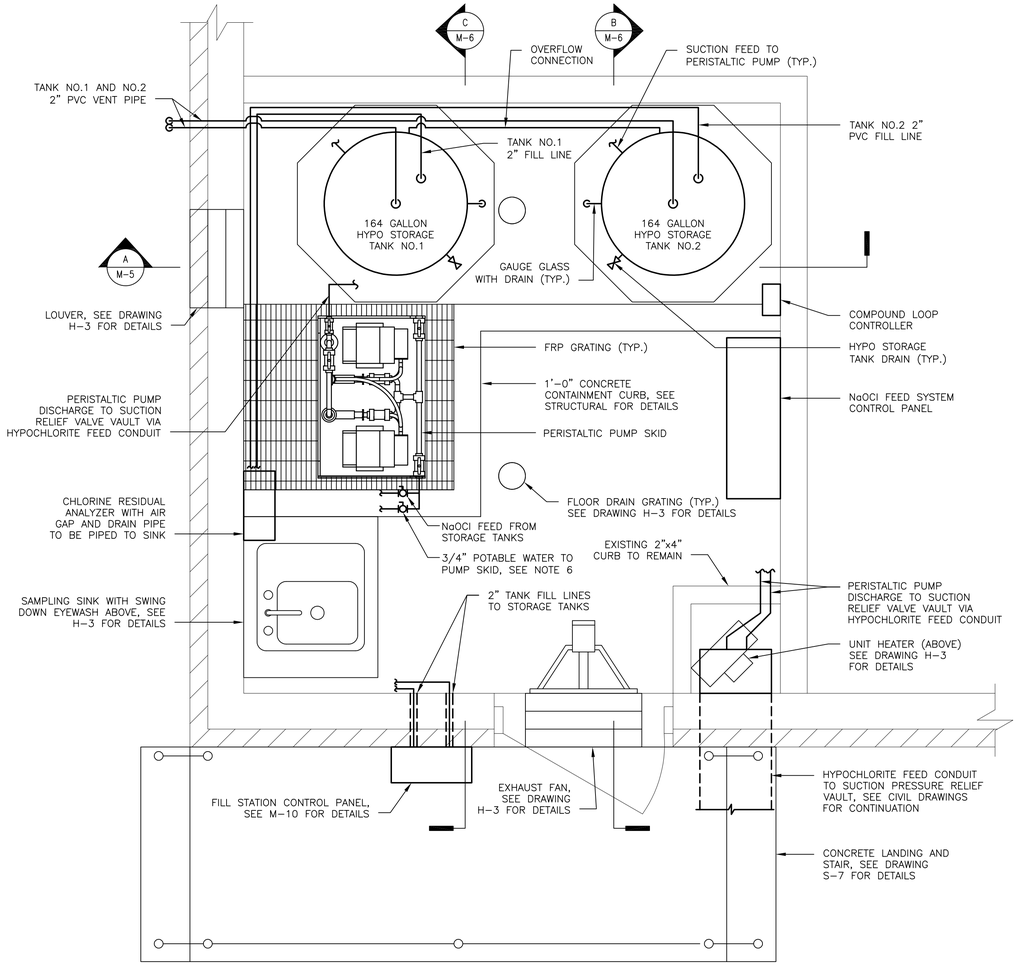

PUMPING STATION – CHEMICAL ROOM NEW WORK PLAN AT EL. 473.50

SCALE: 3/4" = 1'-0"

GENERAL SHEET NOTES:

1. ALL PIPING SUPPORTS AND ACCESS STAIRS HAVE NOT BEEN SHOWN ON THE DRAWING FOR CLARITY. SEE STRUCTURAL DRAWINGS FOR DETAILS.
2. CLEAN, PREP, AND RE-PAINT ALL EXISTING PIPING AND FITTINGS.
3. WORK SHALL BE DONE IN ACCORDANCE WITH APPROVED SEQUENCE OF CONSTRUCTION TO MINIMIZE IMPACT TO STATION OPERATIONS.
4. PIPE SHOWN SCHEMATIC IN NATURE. CONTRACTOR TO SUBMIT PIPING LAYOUT SHOWING ALL EQUIPMENT FOR REVIEW AND APPROVAL.
5. REFER TO M-10 FOR TANK DETAILS.
6. PROVIDE INDIVIDUAL 3/4" POTABLE WATER TO EACH PUMP CONNECTION WITH ISOLATION VALVE. SEE M-6 FOR SYSTEM SCHEMATIC.

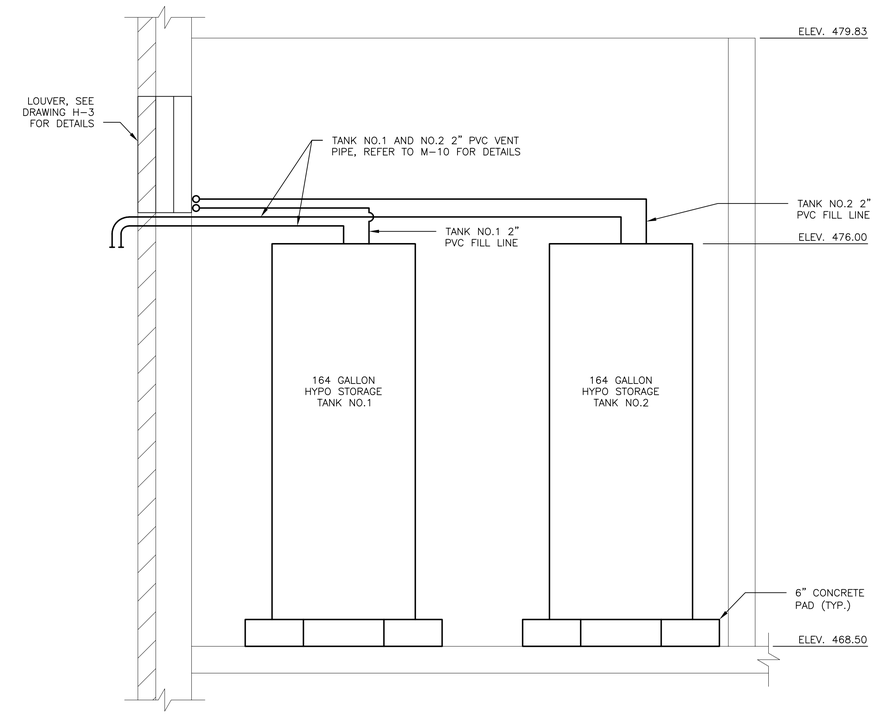

PUMPING STATION – CHEMICAL ROOM NEW WORK SECTION

A / M-5

SCALE: 3/4" = 1'-0"

CITY OF BALTIMORE	REVISION – CITY OF BALTIMORE
CHIEF, OFFICE OF ENGINEERING AND CONSTRUCTION — DATE	CHIEF, FACILITIES ENGINEERING SECTION — DATE

SEAL: STATE OF MARYLAND — DAVID S. COX — No. 31273 — PROFESSIONAL ENGINEER

DATE: 9/17/2020

PROFESSIONAL CERTIFICATION

I HEREBY CERTIFY THAT THESE DOCUMENTS WERE PREPARED OR APPROVED BY ME, AND THAT I AM A DULY LICENSED PROFESSIONAL ENGINEER UNDER THE LAWS OF THE STATE OF MARYLAND.

LICENSE NO. 31273, EXPIRATION DATE 01/16/2021.

ENGINEER: JOHNSON, MIRMIRAN & THOMPSON
40 WIGHT AVENUE
HUNT VALLEY, MD 21030

AS-BUILT PER RECORD PRINT

BY:
DATE:

DESIGN BY: DSC
DRAWN BY: GWK
CHKD BY: DSC

REVISION	BY	DATE
CONTRACT COMPLETION BOX		

P.W.A. NO.	KEY SHEET	POSITION SHT
–	V-NE	77 NW 5,6
R.O.W NO.		
–		

DRAWING SCALE	
PLAN SCALE:	AS SHOWN
PROFILE SCALE:	N/A
	N/A

DEPARTMENT OF PUBLIC WORKS: SEE DRAWING 2020-0428 FOR ORIGINAL SIGNATURES

BUREAU OF ENGINEERING AND CONSTRUCTION	HIGHWAYS	STRUCTURES	STORM DRAINS	SEWER	WATER	FIELD ENGINEER	BUR. OF ENGINEERING & CONSTRUCTION
SEE DRAWING 2020-0428 FOR ORIGINAL SIGNATURES							

6" 0 6" 12" 18"
SCALE: 3/4"= 1'-0"

BALTIMORE COUNTY DEPARTMENT OF PUBLIC WORKS BUREAU OF ENGINEERING & CONSTRUCTION

SPARKS PUMPING STATION

PUMPING STATION – NEW WORK PLAN AND SECTION

SPARKS WATER PUMPING STATION AND ELEVATED WATER STORAGE TANK IMPROVEMENTS

SUBDIVISION: SPARKS, MD ELECTION DIST. NO.: 8C3

CONTRACT COMPLETION BOX

CONTRACTOR:
DATE COMPLETED:
INSPECTOR:
PIPE MATERIAL (Pressure Only)

DWG. FILENAME:

SHEET DESIGNATION	CONTRACT NUMBER
M-5	20094WXO
JOB ORDER NUMBER	
231-203-0035-0514	
SHEET 34 OF 71	
DRAWING NUMBER	
2020-0461	
FILE NO.:	REV. 05/17

BALTIMORE COUNTY MARYLAND

GENERAL SHEET NOTES:

1. ALL PIPING SUPPORTS AND ACCESS STAIRS HAVE NOT BEEN SHOWN ON THE DRAWING FOR CLARITY. SEE STRUCTURAL DRAWINGS FOR DETAILS.
2. CLEAN, PREP, AND RE-PAINT ALL EXISTING PIPING AND FITTINGS.
3. WORK SHALL BE DONE IN ACCORDANCE WITH APPROVED SEQUENCE OF CONSTRUCTION TO MINIMIZE IMPACT TO STATION OPERATIONS.
4. PIPING SHOWN IS SCHEMATIC IN NATURE. CONTRACTOR TO SUBMIT PIPING LAYOUT SHOWING ALL EQUIPMENT FOR REVIEW AND APPROVAL.
5. REFER TO M-10 FOR TANK DETAILS.
6. CONTRACTOR SHALL PROVIDE SOFT CORNER BUMPERS AT THE PROJECTING CORNERS AND EDGES OF PUMP SKID. CONTRACTOR SHALL SUBMIT BUMPER DETAILS WITH GRATING SHOP DRAWING FOR APPROVAL.

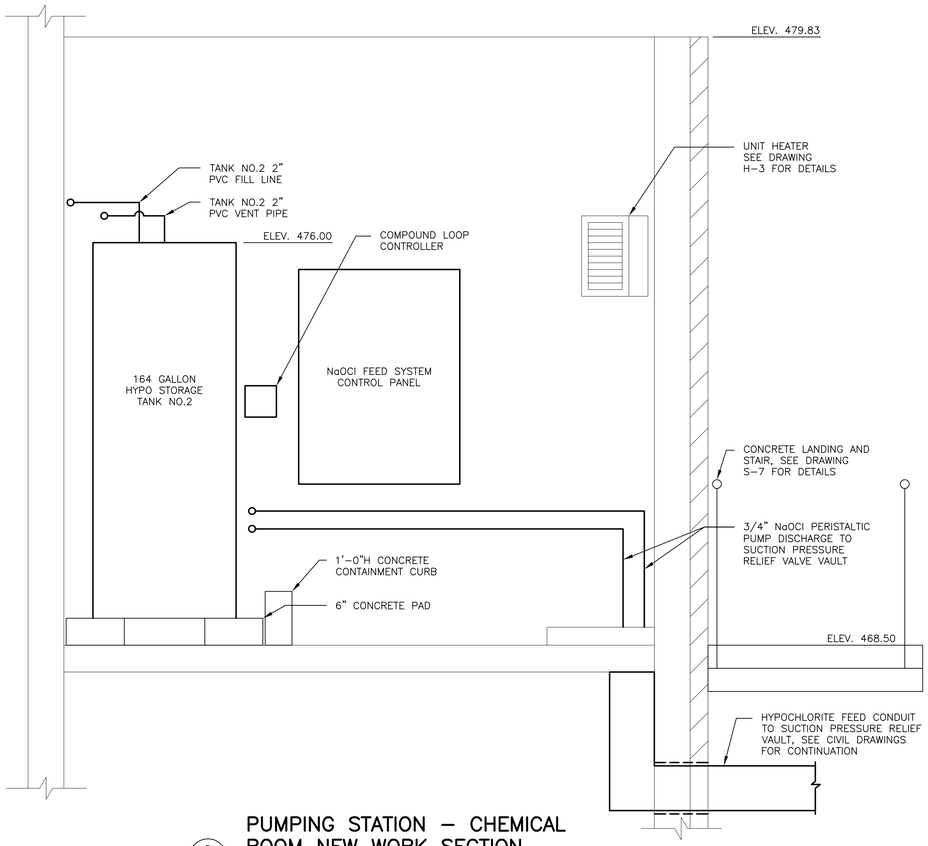

B
M-5

PUMPING STATION – CHEMICAL ROOM NEW WORK SECTION

SCALE: 3/4" = 1'-0"

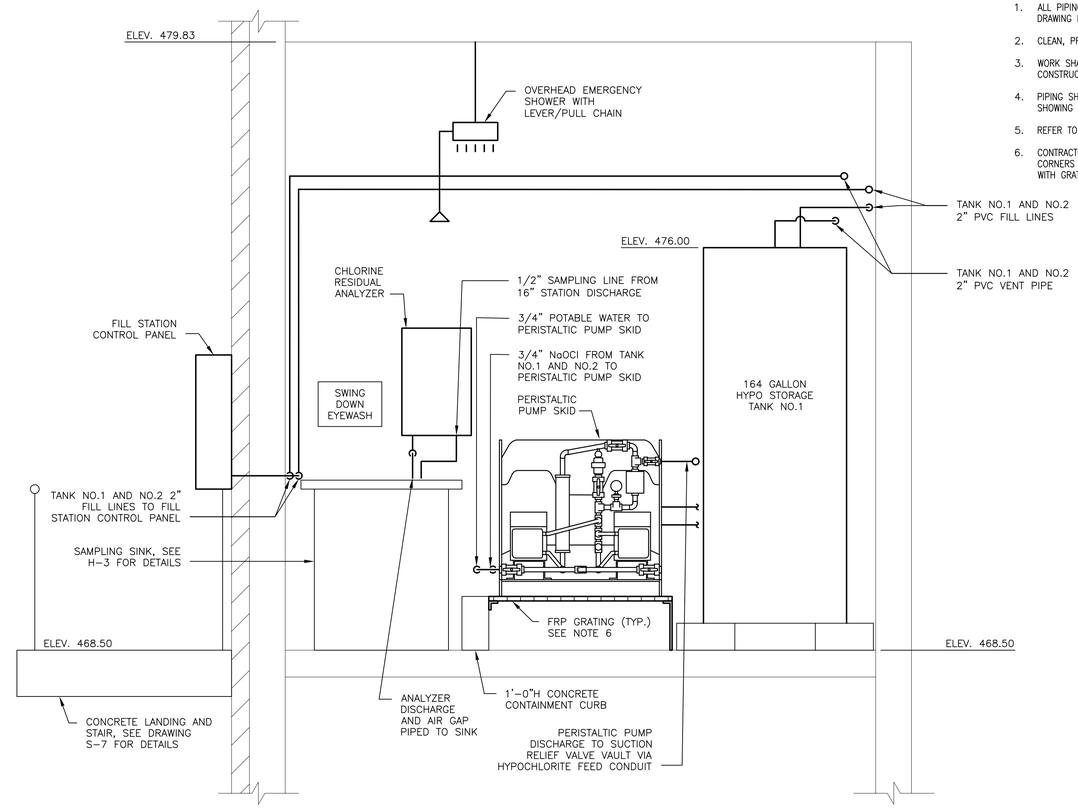

C
M-5

PUMPING STATION – CHEMICAL ROOM NEW WORK SECTION

SCALE: 3/4" = 1'-0"

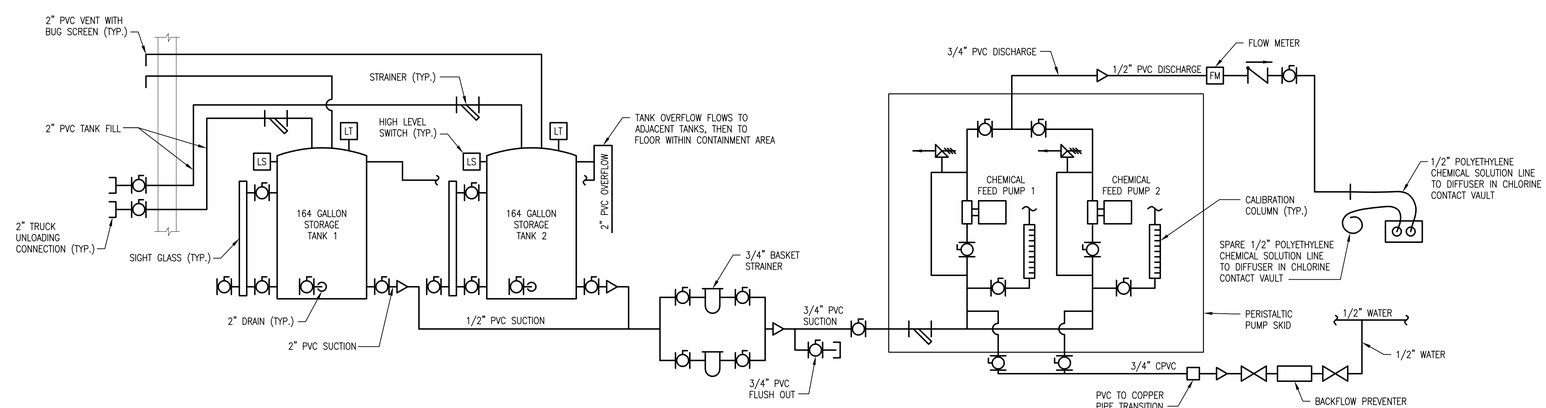

NaOCl SYSTEM SCHEMATIC

SCALE: NOT TO SCALE

6" 0 6" 12" 18"
SCALE: 3/4"= 1'-0"

CITY OF BALTIMORE	REVISION – CITY OF BALTIMORE
CHIEF, OFFICE OF ENGINEERING AND CONSTRUCTION — DATE	CHIEF, FACILITIES ENGINEERING SECTION — DATE

SEAL: STATE OF MARYLAND — DAVID S. COX — No. 31273 — PROFESSIONAL ENGINEER

DATE: 9/17/2020

PROFESSIONAL CERTIFICATION

I HEREBY CERTIFY THAT THESE DOCUMENTS WERE PREPARED OR APPROVED BY ME, AND THAT I AM A DULY LICENSED PROFESSIONAL ENGINEER UNDER THE LAWS OF THE STATE OF MARYLAND.
LICENSE NO. 31273 EXPIRATION DATE 01/16/2021

ENGINEER: JOHNSON, MIRMIRAN & THOMPSON
40 WIGHT AVENUE
HUNT VALLEY, MD 21030

AS-BUILT PER RECORD PRINT
BY:
DATE:

DESIGN BY: DSC
DRAWN BY: GWK
CHKD BY: DSC

REVISION	BY	DATE
CONTRACT COMPLETION BOX		

P.W.A. NO.	KEY SHEET	POSITION SHT
–	V-NE	77 NW 5,6
R.O.W NO.		
–		

DRAWING SCALE	
PLAN SCALE:	AS SHOWN
	N/A
PROFILE SCALE:	N/A

DEPARTMENT OF PUBLIC WORKS
SEE DRAWING 2020-0428 FOR ORIGINAL SIGNATURES

BUREAU OF ENGINEERING AND CONSTRUCTION	HIGHWAYS	STRUCTURES	STORM DRAINS	SEWER	WATER	FIELD ENGINEER	BUR. OF ENGINEERING & CONSTRUCTION
SEE DRAWING 2020-0428 FOR ORIGINAL SIGNATURES							

BALTIMORE COUNTY DEPARTMENT OF PUBLIC WORKS BUREAU OF ENGINEERING & CONSTRUCTION

SPARKS PUMPING STATION

PUMPING STATION – NEW WORK SECTIONS

SPARKS WATER PUMPING STATION AND ELEVATED WATER STORAGE TANK IMPROVEMENTS

SUBDIVISION: SPARKS, MD ELECTION DIST. NO.: 8C3

CONTRACT COMPLETION BOX

CONTRACTOR:
DATE COMPLETED:
INSPECTOR:
PIPE MATERIAL (Pressure Only)

DWG. FILENAME:

SHEET DESIGNATION	CONTRACT NUMBER
M-6	20094WX0
JOB ORDER NUMBER	
231-203-0035-0514	
SHEET 35 OF 71	
DRAWING NUMBER	
2020-0462	
FILE NO.:	REV. 4/17/17

BALTIMORE COUNTY MARYLAND

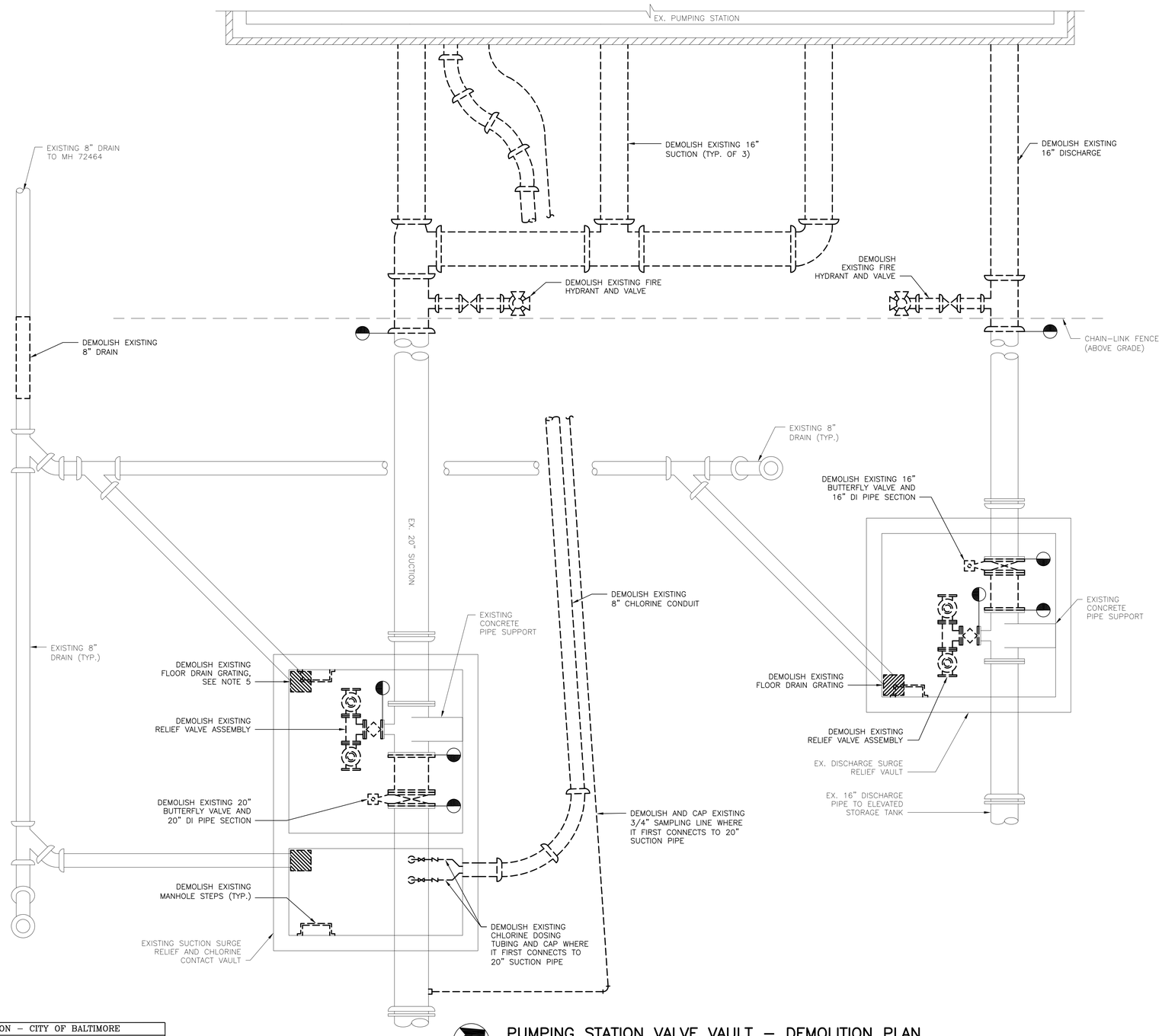

PUMPING STATION VALVE VAULT – DEMOLITION PLAN

SCALE: 3/8" = 1'-0"

GENERAL SHEET NOTES:

1. CONTRACTOR SHALL NOTIFY THE CITY AT LEAST 30 DAYS PRIOR TO THE START OF DEMOLITION ACTIVITIES RELATED TO CHLORINE EQUIPMENT. SALVAGEABLE EQUIPMENT IN THE CHLORINATION ROOM SHALL BE REMOVED BY THE CITY. ALL REMAINING EQUIPMENT SHALL BE REMOVED BY CONTRACTOR. A TEMPORARY CHLORINATION SYSTEM SHALL BE INSTALLED, TESTED, AND APPROVED PRIOR TO THE REMOVAL OF THE EXISTING CHLORINATION EQUIPMENT. CONTRACTOR SHALL COORDINATE WITH THE CITY AT LEAST 7 DAYS PRIOR TO THE START OF DEMOLITION ACTIVITIES WITHIN PUMPING STATION FOR CITY TO TAG ITEMS TO BE SALVAGED.
2. THE CONTRACTOR IS RESPONSIBLE FOR PROVIDING ALL MEANS FOR ISOLATING THE LINES.
3. REFER TO SPECIFICATION 02412 FOR GENERAL DEMOLITION REQUIREMENTS; SPECIFICALLY, DEMOLITION OF ANY EQUIPMENT SHALL INCLUDE ALL ASSOCIATED INSTRUMENTATION AND ELECTRICAL EQUIPMENT.
4. REFER TO SPECIFICATION 01300 FOR GENERAL SEQUENCING REQUIREMENTS.
5. CONTRACTOR SHALL CLEAN VAULTS AFTER INSTALLATION OF SURGE RELIEF VALVES. AFTER VAULTS ARE CLEANED, CONTRACTOR SHALL CLEAN AND INSPECT ALL VAULT DRAINS.
6. WORK SHALL BE DONE IN ACCORDANCE WITH APPROVED SEQUENCE OF CONSTRUCTION TO MINIMIZE IMPACT TO STATION OPERATIONS.

CITY OF BALTIMORE	REVISION – CITY OF BALTIMORE
CHIEF, OFFICE OF ENGINEERING AND CONSTRUCTION DATE	CHIEF, FACILITIES ENGINEERING SECTION DATE

SEAL: STATE OF MARYLAND – DAVID S. COX – No. 31273 – PROFESSIONAL ENGINEER

DATE: 9/17/2020

PROFESSIONAL CERTIFICATION

I HEREBY CERTIFY THAT THESE DOCUMENTS WERE PREPARED OR APPROVED BY ME, AND THAT I AM A DULY LICENSED PROFESSIONAL ENGINEER UNDER THE LAWS OF THE STATE OF MARYLAND.

LICENSE NO. 31273, EXPIRATION DATE 01/16/2021

ENGINEER: JOHNSON, MIRMIRAN & THOMPSON
40 WIGHT AVENUE
HUNT VALLEY, MD 21030

AS-BUILT PER RECORD PRINT
BY:
DATE:

DESIGN BY: DSC
DRAWN BY: GWK
CHKD BY: DSC

REVISION	BY	DATE
CONTRACT COMPLETION BOX		

P.W.A. NO.	KEY SHEET	POSITION SHT
–	V-NE	77 NW 5,6
R.O.W NO.		
–		

DRAWING SCALE	
PLAN SCALE:	AS SHOWN
PROFILE SCALE:	N/A
	N/A

DEPARTMENT OF PUBLIC WORKS

SEE DRAWING 2020-0428 FOR ORIGINAL SIGNATURES

BUREAU OF ENGINEERING AND CONSTRUCTION	HIGHWAYS	STRUCTURES	STORM DRAINS	SEWER	WATER	FIELD ENGINEER	BUR. OF ENGINEERING & CONSTRUCTION

SEE DRAWING 2020-0428 FOR ORIGINAL SIGNATURES

CONTRACT COMPLETION BOX

CONTRACTOR:
DATE COMPLETED:
INSPECTOR:
PIPE MATERIAL (Pressure Only)

DWG. FILENAME:

SCALE: 1' 0 1' 2' 3' — 3/8"= 1'-0"

BALTIMORE COUNTY DEPARTMENT OF PUBLIC WORKS BUREAU OF ENGINEERING & CONSTRUCTION

SPARKS PUMPING STATION

PUMPING STATION VALVE VAULT – DEMOLITION PLAN

SPARKS WATER PUMPING STATION AND ELEVATED WATER STORAGE TANK IMPROVEMENTS

SUBDIVISION: SPARKS, MD ELECTION DIST. NO.: 8C3

SHEET DESIGNATION	CONTRACT NUMBER
M-7	20094WX0
JOB ORDER NUMBER	
231-203-0035-0514	
SHEET 36 OF 71	
DRAWING NUMBER	
2020-0463	
FILE NO.:	REV. 03/17

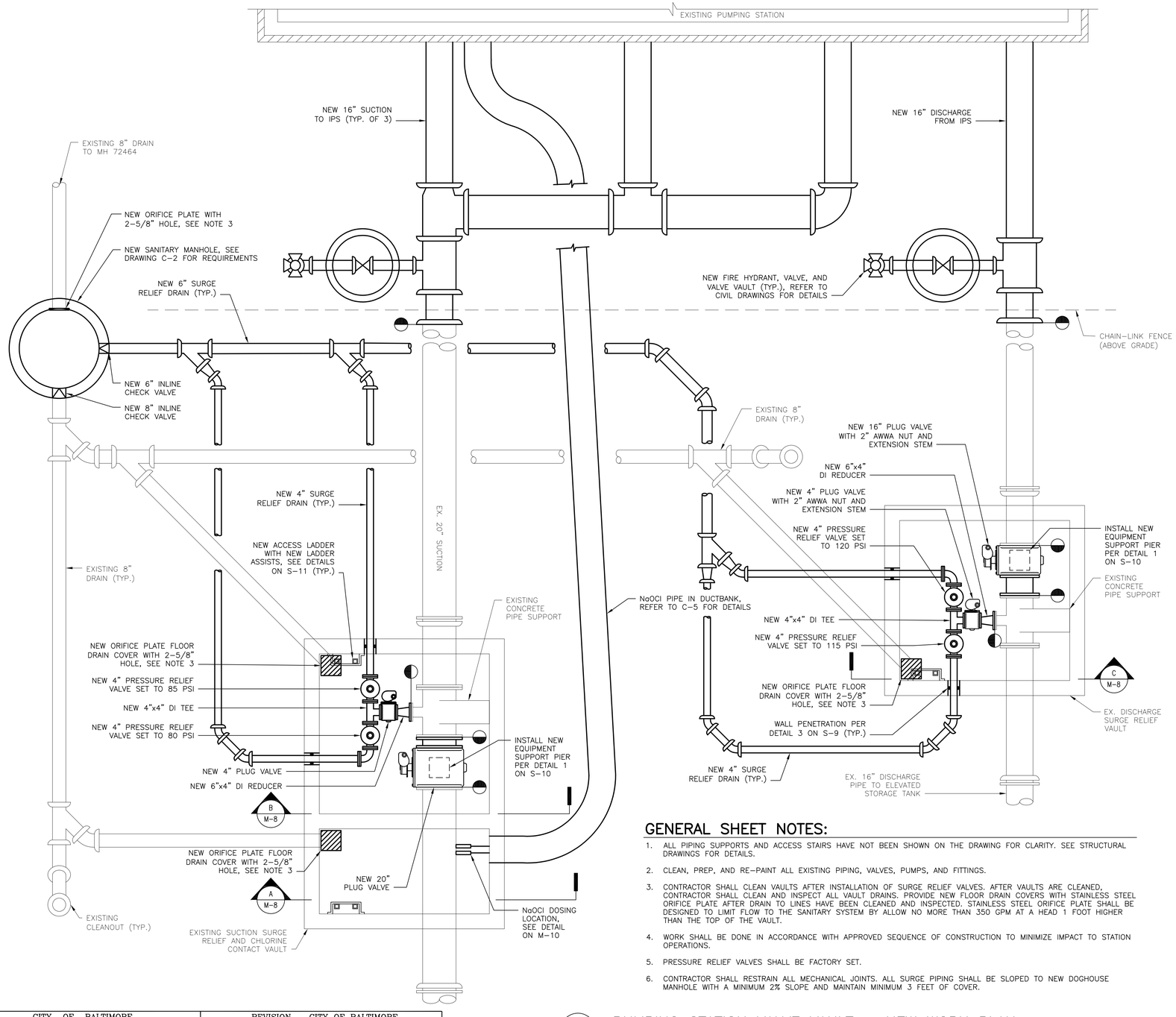

PUMPING STATION VALVE VAULT – NEW WORK PLAN

SCALE: 3/8" = 1'-0"

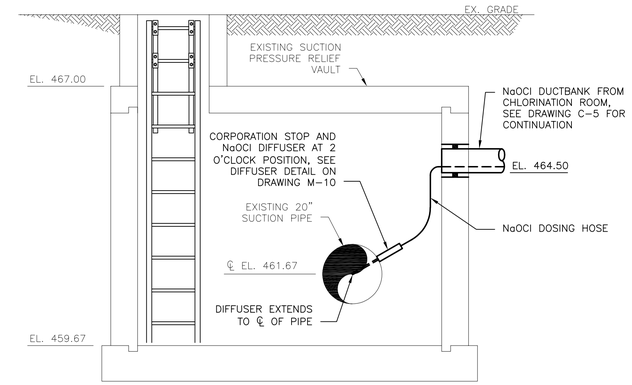

A M-8 **CHLORINE CONTACT VAULT – SECTION**

SCALE: NOT TO SCALE

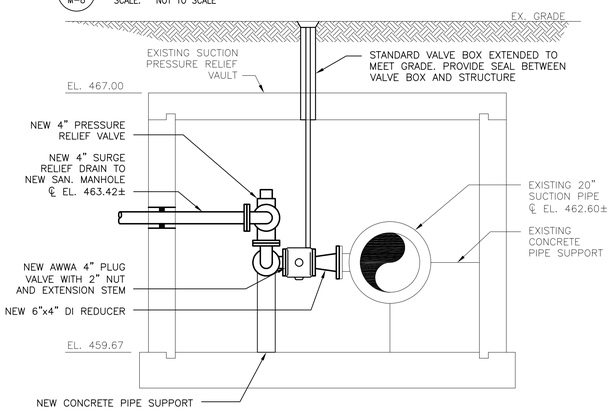

B M-8 **SUCTION SURGE RELIEF VAULT – SECTION**

SCALE: NOT TO SCALE

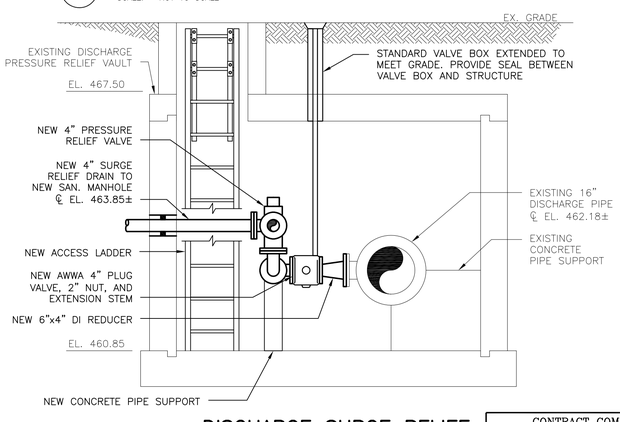

C M-8 **DISCHARGE SURGE RELIEF VAULT – SECTION**

SCALE: NOT TO SCALE

GENERAL SHEET NOTES:

1. ALL PIPING SUPPORTS AND ACCESS STAIRS HAVE NOT BEEN SHOWN ON THE DRAWING FOR CLARITY. SEE STRUCTURAL DRAWINGS FOR DETAILS.
2. CLEAN, PREP, AND RE-PAINT ALL EXISTING PIPING, VALVES, PUMPS, AND FITTINGS.
3. CONTRACTOR SHALL CLEAN VAULTS AFTER INSTALLATION OF SURGE RELIEF VALVES. AFTER VAULTS ARE CLEANED, CONTRACTOR SHALL CLEAN AND INSPECT ALL VAULT DRAINS. PROVIDE NEW FLOOR DRAIN COVERS WITH STAINLESS STEEL ORIFICE PLATE AFTER DRAIN TO LINES HAVE BEEN CLEANED AND INSPECTED. STAINLESS STEEL ORIFICE PLATE SHALL BE DESIGNED TO LIMIT FLOW TO THE SANITARY SYSTEM BY ALLOW NO MORE THAN 350 GPM AT A HEAD 1 FOOT HIGHER THAN THE TOP OF THE VAULT.
4. WORK SHALL BE DONE IN ACCORDANCE WITH APPROVED SEQUENCE OF CONSTRUCTION TO MINIMIZE IMPACT TO STATION OPERATIONS.
5. PRESSURE RELIEF VALVES SHALL BE FACTORY SET.
6. CONTRACTOR SHALL RESTRAIN ALL MECHANICAL JOINTS. ALL SURGE PIPING SHALL BE SLOPED TO NEW DOGHOUSE MANHOLE WITH A MINIMUM 2% SLOPE AND MAINTAIN MINIMUM 3 FEET OF COVER.

1' 0 1' 2' 3'

SCALE: 3/8"= 1'-0"

CITY OF BALTIMORE	REVISION – CITY OF BALTIMORE
CHIEF, OFFICE OF ENGINEERING AND CONSTRUCTION — DATE	CHIEF, FACILITIES ENGINEERING SECTION — DATE

SEAL: STATE OF MARYLAND — DAVID S. COX — No. 31273 — PROFESSIONAL ENGINEER

DATE: 9/17/2020

PROFESSIONAL CERTIFICATION

I HEREBY CERTIFY THAT THESE DOCUMENTS WERE PREPARED OR APPROVED BY ME, AND THAT I AM A DULY LICENSED PROFESSIONAL ENGINEER UNDER THE LAWS OF THE STATE OF MARYLAND.

LICENSE NO. 31273, EXPIRATION DATE 01/16/2021

ENGINEER: JOHNSON, MIRMIRAN & THOMPSON
40 WIGHT AVENUE
HUNT VALLEY, MD 21030

AS-BUILT PER RECORD PRINT
BY:
DATE:

DESIGN BY: DSC
DRAWN BY: GWK
CHKD BY: DSC

REVISION	BY	DATE
CONTRACT COMPLETION BOX		

P.W.A. NO.	KEY SHEET	POSITION SHT
–	V-NE	77 NW 5,6
R.O.W NO.		
–		

DRAWING SCALE	
PLAN SCALE:	AS SHOWN
PROFILE SCALE:	N/A
	N/A

DEPARTMENT OF PUBLIC WORKS

SEE DRAWING 2020-0428 FOR ORIGINAL SIGNATURES

BUREAU OF ENGINEERING AND CONSTRUCTION	HIGHWAYS	STRUCTURES	STORM DRAINS	SEWER	WATER	FIELD ENGINEER	BUR. OF ENGINEERING & CONSTRUCTION
SEE DRAWING 2020-0428 FOR ORIGINAL SIGNATURES							

BALTIMORE COUNTY DEPARTMENT OF PUBLIC WORKS BUREAU OF ENGINEERING & CONSTRUCTION

SPARKS PUMPING STATION

PUMPING STATION VALVE VAULT – NEW WORK PLAN AND DETAIL

SPARKS WATER PUMPING STATION AND ELEVATED WATER STORAGE TANK IMPROVEMENTS

SUBDIVISION: SPARKS, MD ELECTION DIST. NO.: 8C3

CONTRACT COMPLETION BOX

CONTRACTOR:
DATE COMPLETED:
INSPECTOR:
PIPE MATERIAL (Pressure Only)

DWG. FILENAME:

SHEET DESIGNATION	CONTRACT NUMBER
M-8	20094WXO
JOB ORDER NUMBER	
231-203-0035-0514	
SHEET 37 OF 71	
DRAWING NUMBER	
2020-0464	
FILE NO.:	REV. 8/17/17

BALTIMORE COUNTY MARYLAND

GENERAL SHEET NOTES:

1. ALL PIPING SUPPORTS HAVE NOT BEEN SHOWN ON THE DRAWING FOR CLARITY. SEE STRUCTURAL DRAWINGS FOR DETAILS.
2. CLEAN, PREP, AND RE-PAINT ALL EXISTING PIPING, VALVES, PUMPS, AND FITTINGS.
3. CONTRACTOR SHALL CLEAN VAULTS AFTER ALL WORK IN VAULTS IS COMPLETED. AFTER VAULTS ARE CLEANED, CONTRACTOR SHALL CLEAN AND INSPECT ALL VAULT DRAINS. PROVIDE NEW FLOOR DRAIN COVERS AFTER DRAIN TO LINES HAVE BEEN CLEANED AND INSPECTED.
4. WORK SHALL BE DONE IN ACCORDANCE WITH APPROVED SEQUENCE OF CONSTRUCTION TO MINIMIZE IMPACT TO STATION OPERATIONS.
5. PROVIDE NEW VALVE SUPPORTS IN ACCORDANCE WITH STRUCTURAL DETAILS.
6. CONTRACTOR SHALL COORDINATE LOCATION OF VALVE BOXES ON VAULT TOP SLAB WITH VALVES IN VALVE VAULT.
7. HATCH AND VALVE BOXES SHALL BE FLUSH-MOUNTED.

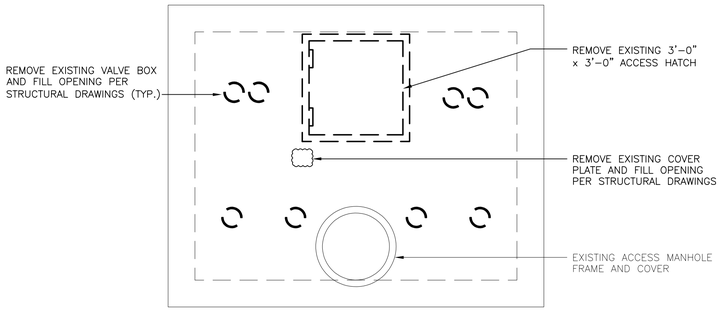

ELEVATED TANK VALVE VAULT TOP SLAB – DEMOLITION PLAN
SCALE: 3/8" = 1'-0"

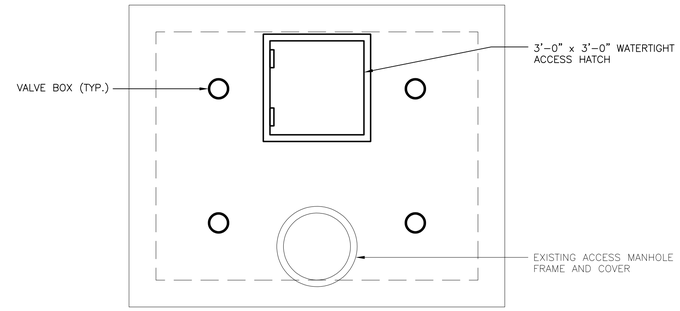

ELEVATED TANK VALVE VAULT TOP SLAB – NEW WORK PLAN
SCALE: 3/8" = 1'-0"

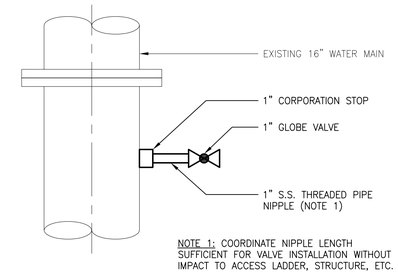

ELEVATED STORAGE TANK VALVE VAULT SAMPLING PORT – DETAIL
SCALE: NOT TO SCALE

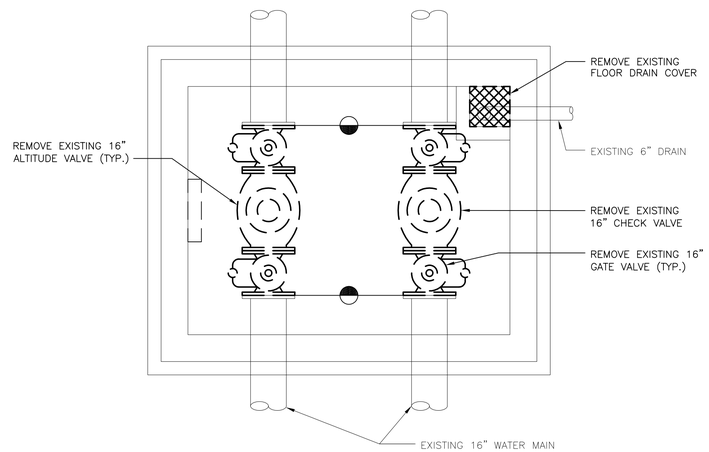

ELEVATED TANK VALVE VAULT – DEMOLITION PLAN
SCALE: 3/8" = 1'-0"

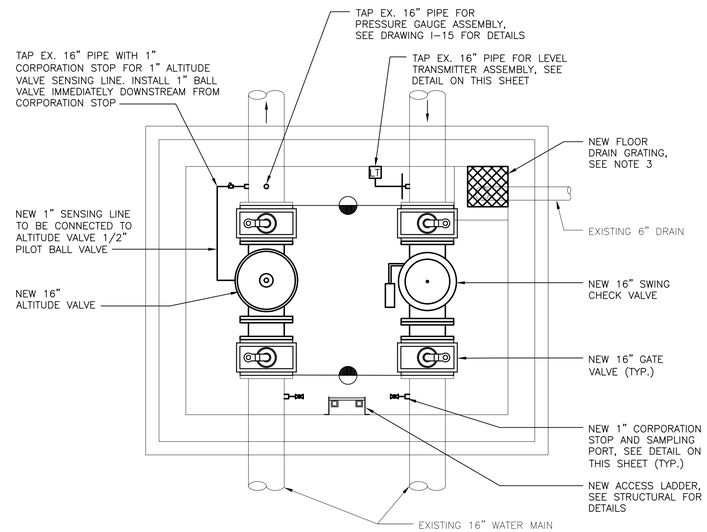

ELEVATED TANK VALVE VAULT – NEW WORK PLAN
SCALE: 3/8" = 1'-0"

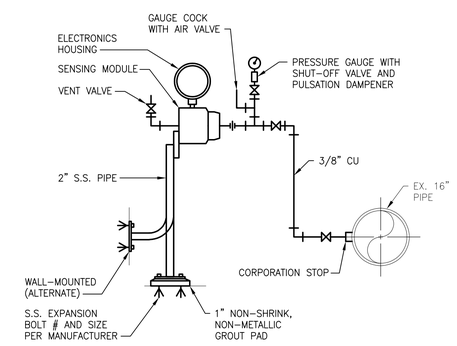

LEVEL TRANSMITTER ASSEMBLY – DETAIL
SCALE: NOT TO SCALE

CITY OF BALTIMORE	REVISION – CITY OF BALTIMORE
CHIEF, OFFICE OF ENGINEERING AND CONSTRUCTION — DATE	CHIEF, FACILITIES ENGINEERING SECTION — DATE

SEAL: STATE OF MARYLAND — DAVID S. COX — No. 31273 — PROFESSIONAL ENGINEER
DATE: 9/17/2020

PROFESSIONAL CERTIFICATION
I HEREBY CERTIFY THAT THESE DOCUMENTS WERE PREPARED OR APPROVED BY ME, AND THAT I AM A DULY LICENSED PROFESSIONAL ENGINEER UNDER THE LAWS OF THE STATE OF MARYLAND.
LICENSE NO. 31273, EXPIRATION DATE 01/16/2021

ENGINEER: JOHNSON, MIRMIRAN & THOMPSON
40 WIGHT AVENUE
HUNT VALLEY, MD 21030
AS-BUILT PER RECORD PRINT
BY:
DATE:

DESIGN BY: DSC
DRAWN BY: GWK
CHKD BY: DSC

REVISION	BY	DATE
CONTRACT COMPLETION BOX		

P.W.A. NO.	KEY SHEET	POSITION SHT
–	DD-SE	82 NW 5,6
R.O.W NO. –		

DRAWING SCALE	
PLAN SCALE:	AS SHOWN
PROFILE SCALE:	N/A
	N/A

DEPARTMENT OF PUBLIC WORKS: SEE DRAWING 2020-0428 FOR ORIGINAL SIGNATURES

BUREAU OF ENGINEERING AND CONSTRUCTION	HIGHWAYS	STRUCTURES	STORM DRAINS	SEWER	WATER	FIELD ENGINEER	BUR. OF ENGINEERING & CONSTRUCTION
SEE DRAWING 2020-0428 FOR ORIGINAL SIGNATURES							

CONTRACT COMPLETION BOX
CONTRACTOR:
DATE COMPLETED:
INSPECTOR:
PIPE MATERIAL (Pressure Only)

DWG. FILENAME:

1' 0 1' 2' 3'
SCALE: 3/8" = 1'-0"

BALTIMORE COUNTY DEPARTMENT OF PUBLIC WORKS BUREAU OF ENGINEERING & CONSTRUCTION

SPARKS PUMPING STATION

ELEVATED TANK VALVE VAULT – DEMOLITION AND NEW WORK PLANS

SPARKS WATER PUMPING STATION AND ELEVATED WATER STORAGE TANK IMPROVEMENTS

SUBDIVISION: SPARKS, MD ELECTION DIST. NO.: 8C3

SHEET DESIGNATION	CONTRACT NUMBER
M-9	20094WX0
JOB ORDER NUMBER	231-203-0035-0514
SHEET 38 OF 71	
DRAWING NUMBER	2020-0465
FILE NO.:	REV. 8/17/2

BALTIMORE COUNTY MARYLAND

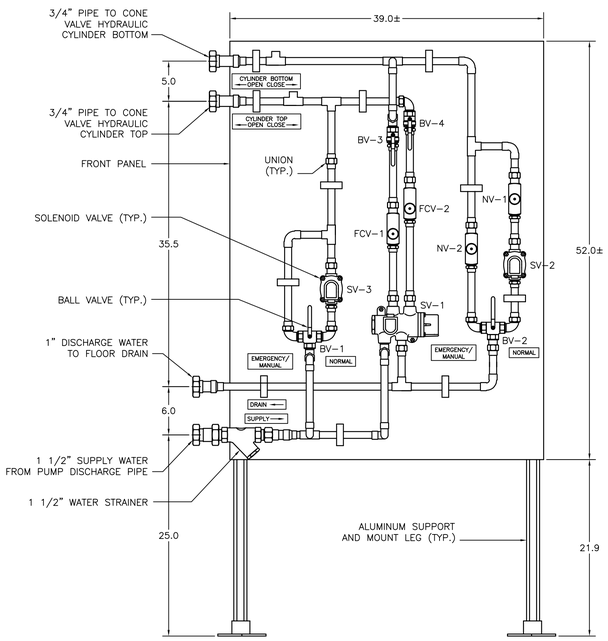

CONE VALVE CONTROL PANEL – LAYOUT

SCALE: NOT TO SCALE

ITEMIZED LEGEND:

SV-1	4-WAY SOLENOID VALVE
SV-2	2-WAY FAST CLOSE SOLENOID VALVE (N.O.)
SV-3	2-WAY FAST CLOSE SOLENOID VALVE (N.O.)
FCV-1	CLOSE SPEED CONTROL
FCV-2	OPEN SPEED CONTROL
NV-1	EMERGENCY CLOSE SPEED CONTROL- AUTO
NV-2	EMERGENCY CLOSE SPEED CONTROL- MANUAL
BV-1	BALL VALVE 3 WAY
BV-2	BALL VALVE 3 WAY
BV-3	BALL VALVE 2 WAY (N.O.)
BV-4	BALL VALVE 2 WAY (N.O.)

NOTE:

1. SEE INSTRUMENTATION DRAWINGS AND SPECIFICATION 15110 FOR CONTROL PIPING, WIRING, AND VALVE SEQUENCE OF OPERATION.
2. VALVE MANUFACTURER IS RESPONSIBLE FOR SIZING CONTROL VALVE AND PIPING AND PROVIDING ALL EQUIPMENT TO ENSURE A COMPLETE INSTALLATION.
3. PROVIDE SPUD UNION ON ALL THE CONNECTION POINTS OF FOUR PORTS ON THE 4-WAY VALVE AND ON THE TWO PORTS OF 2-WAY SOLENOID VALVES.
4. ELECTRIC PANEL LOCATED ON CONE VALVE BACK PANEL. SEE INSTRUMENTATION DRAWINGS FOR PANEL DETAIL.
5. TUBING SHALL BE COPPER TYPE K, SIZES AS SHOWN AND AS REQURIED FOR FULLY FUNCTIONAL OPERATION. FITTINGS SHALL BE SWEAT COPPER FITTINGS.
6. MANUAL CLOSE AND EMERGENCY CLOSE TAGS SHALL BE ENGRAVED LAMINATED PLASTIC.
7. ALL VALVE AND CONTROLS COMPONENTS SHALL BE MOUNTED ON MINIMUM 3/4" POLYCOARBONATE PANEL BY VALVE MANUFACTURER. PROVIDE SUPPORTS AND MOUNT LEGS AND FASTENERS TO PANEL.
8. PROVIDE ISOLATION VALVES AND CHECK VALVES FROM BOTH THE UPSTREAM AND DOWNSTREAM SIDES OF THE CONE VALVE.
9. REFER TO I-15 FOR CONE VALVE HYDRAULIC SCHEMATIC.

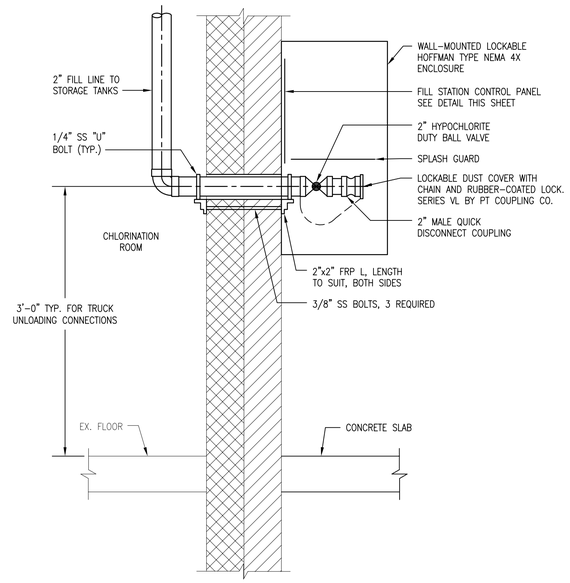

TRUCK UNLOADING CONNECTION – DETAIL

SCALE: NOT TO SCALE

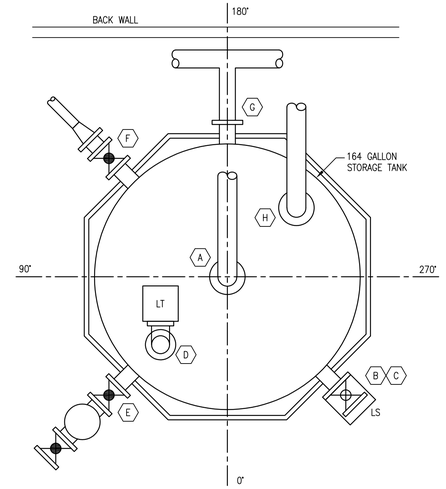

NaOCl TANK CONNECTION SCHEDULE					
MARK ⬡	ORIENTATION 180° 90° ⊕ 270° 0°	SIZE (IN.)	LOCATION	HEIGHT (TANK NOTE 2)	DESCRIPTION
A	0	2	TOP	–	VENT
B	315	2	SIDE	BOTTOM	FLANGED BOTTOM DRAIN, SEE NOTE 1
C	315	2	SIDE	6'-6"	HIGH LEVEL SWITCH
D	45	2	TOP	–	FLANGED NOZZLE FOR LEVEL TRANSMITTER
E	45	2	SIDE	6" & 6'-6"	GAGE GLASS WITH DRAIN
F	135	2	SIDE	BOTTOM	FLANGED NOZZLE FOR FEED PUMP SUCTION
G	180	2	SIDE	6'-6"	FLANGED NOZZLE FOR OVERFLOW CONNECTION
H	225	2	TOP	–	FLANGED NOZZLE FOR TANK FILL

NOTES:
1. INSIDE TANK BOTTOM TO BE SLOPED TOWARD DRAIN.
2. DISTANCES MEASURED FROM INSIDE BOTTOM OF TANK.

HYPOCHLORITE STORAGE TANK CONNECTION – DETAIL

SCALE: NOT TO SCALE

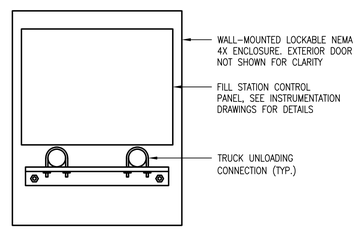

FILL PANEL – DETAIL

SCALE: NOT TO SCALE

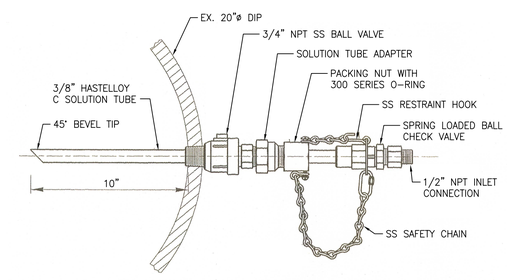

NaOCl DOSING LOCATION – DETAIL

SCALE: NOT TO SCALE

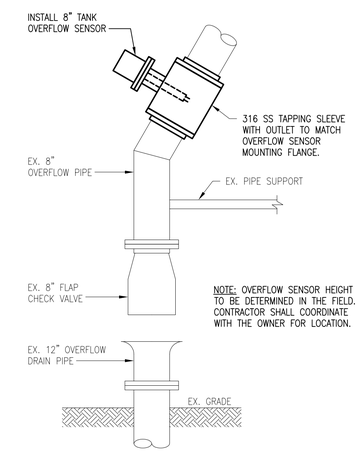

TANK OVERFLOW SENSOR – DETAIL

SCALE: NOT TO SCALE

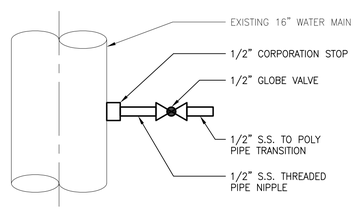

SUCTION SAMPLING PORT – DETAIL

SCALE: NOT TO SCALE

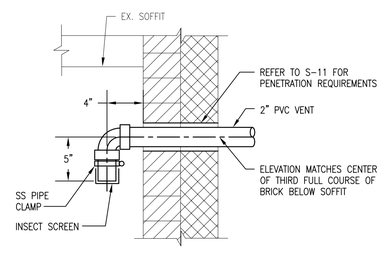

VENT PIPE – DETAIL

SCALE: NOT TO SCALE

CITY OF BALTIMORE	REVISION – CITY OF BALTIMORE
CHIEF, OFFICE OF ENGINEERING AND CONSTRUCTION — DATE	CHIEF, FACILITIES ENGINEERING SECTION — DATE

SEAL: STATE OF MARYLAND — DAVID S. COX — No. 31273 — PROFESSIONAL ENGINEER

DATE: 9/17/2020

PROFESSIONAL CERTIFICATION

I HEREBY CERTIFY THAT THESE DOCUMENTS WERE PREPARED OR APPROVED BY ME, AND THAT I AM A DULY LICENSED PROFESSIONAL ENGINEER UNDER THE LAWS OF THE STATE OF MARYLAND.

LICENSE NO. 31273, EXPIRATION DATE 01/16/2021

ENGINEER: JOHNSON, MIRMIRAN & THOMPSON
40 WIGHT AVENUE
HUNT VALLEY, MD 21030

AS-BUILT PER RECORD PRINT
BY:
DATE:

DESIGN BY: DSC
DRAWN BY: GWK
CHKD BY: DSC

REVISION	BY	DATE
CONTRACT COMPLETION BOX		

P.W.A. NO.	KEY SHEET	POSITION SHT
–	V-NE DD-SE	77 NW 5,6 82 NW 5,6
R.O.W NO.		
–		

DRAWING SCALE	
PLAN SCALE:	AS SHOWN
PROFILE SCALE:	N/A
	N/A

DEPARTMENT OF PUBLIC WORKS

SEE DRAWING 2020-0428 FOR ORIGINAL SIGNATURES

BUREAU OF ENGINEERING AND CONSTRUCTION	HIGHWAYS	STRUCTURES	STORM DRAINS	SEWER	WATER	FIELD ENGINEER	BUR. OF ENGINEERING & CONSTRUCTION

SEE DRAWING 2020-0428 FOR ORIGINAL SIGNATURES

BALTIMORE COUNTY DEPARTMENT OF PUBLIC WORKS BUREAU OF ENGINEERING & CONSTRUCTION

SPARKS PUMPING STATION

MECHANICAL DETAILS

SPARKS WATER PUMPING STATION AND ELEVATED WATER STORAGE TANK IMPROVEMENTS

SUBDIVISION: SPARKS, MD ELECTION DIST. NO.: 8C3

CONTRACT COMPLETION BOX

CONTRACTOR:

DATE COMPLETED:

INSPECTOR:

PIPE MATERIAL (Pressure Only)

D/WG. FILENAME:

SHEET DESIGNATION	CONTRACT NUMBER
M-10	20094WXO
JOB ORDER NUMBER	231-203-0035-0514
SHEET 39 OF 71	
DRAWING NUMBER	2020-0466
FILE NO.:	REV. 07/17

BALTIMORE COUNTY MARYLAND

MECHANICAL LEGEND

SYMBOL	DESCRIPTION
	SOIL, WASTE, OR SANITARY PIPE
	VENT PIPE
	DOMESTIC COLD WATER PIPE
G	NATURAL GAS PIPE
CO CO	CLEANOUT (WALL/FLOOR)
T	THERMOSTAT OR TEMPERATURE SENSOR
Fz	FREEZE STAT
	PIPE CAP
	BRANCH TAKE OFF
	PIPE DROP TEE
	PIPE RISE TEE
	SHUT-OFF VALVE
	ISOLATION BALL VALVE
	UNION
	FLOOR DRAIN
	HOSE BIBB
ø	DIAMETER
	POINT OF CONNECTION, NEW TO EXISTING
	POINT OF DISCONNECTION FROM EXISTING
1	SYMBOL FOR SPECIFIC NOTE. NOTE APPLIES TO DRAWING ON WHICH IT OCCURS.
	EYEWASH

ABBREVIATIONS

@	AT
ABV	ABOVE
AD	ACCESS DOOR
AFF	ABOVE FINISHED FLOOR
APD	AIR PRESSURE DROP
APPROX	APPROXIMATELY
ATC	AUTOMATIC TEMPERATURE CONTROL
BDD	BACKDRAFT DAMPER
BHP	BRAKE HORSEPOWER
BLDG	BUILDING
BLW	BELOW
BP	BYPASS
BTU/HR	BRITISH THERMAL UNITS PER HOUR
CFM	CUBIC FEET PER MINUTE
CI	CAST IRON
CO	CLEANOUT
CONC	CONCRETE
CONN	CONNECT, CONNECTION
CONT'N	CONTINUATION
CW	DOMESTIC COLD WATER
CX	CONNECT TO EXISTING
D	SUPPLY AIR DIFFUSER OR DEEP, DEPTH
DB	DECIBEL OR DRY BULB
DDC	DIRECT DIGITAL CONTROL
DESG	DESIGNATION
DIA, ø	DIAMETER
DIFF	DIFFERENTIAL
DN	DOWN
DPR	DAMPER
DWG	DRAWING
DWH	DOMESTIC WATER HEATER
EA	EXHAUST AIR
EAT	ENTERING AIR TEMPERATURE
EDB	ENTERING DRY BULB
EFF	EFFICIENCY
EF	EXHAUST FAN
ELEC	ELECTRIC
ESP	EXTERNAL STATIC PRESSURE
EUH	ELECTRIC UNIT HEATER
EX	EXISTING
EXH	EXHAUST
F	FILTER
°F	DEGREES FAHRENHEIT
FC	FLEXIBLE CONNECTION
FDR	FLOOR DRAIN
FL	FLOOR
FLA	FULL LOAD AMPERES
FPM	FEET PER MINUTE
FPS	FEET PER SECOND
FT, '	FOOT, FEET OR FLASH TANK
FT HD	FEET OF HEAD
G	NATURAL GAS PIPE OR RETURN/EXHAUST GRILLE
GAL	GALLON, GALLONS
GALV	GALVANIZED
GEN	GENERATOR
GPM	GALLONS PER MINUTE
GV	GRAVITY VENTILATOR
H	HIGH, HEIGHT
H2O	WATER
HB	HOSE BIBB
HED	HOSE END DRAIN VALVE
HP	HORSEPOWER
HZ	HERTZ
IN, "	INCH, INCHES
INV	INVERT
KW	KILOWATTS
L	LONG, LENGTH
LBS	POUNDS
LDB	LEAVING DRY BULB
LF	LINEAR FEET
MAX	MAXIMUM
MBH	THOUSAND BRITISH THERMAL UNITS PER HOUR
MECH	MECHANICAL
MFR	MANUFACTURER
MIN	MINIMUM
MOD	MOTOR OPERATED DAMPER
MVD	MANUAL VOLUME DAMPER
NC	NOISE CRITERIA OR NORMALLY CLOSED
NIC	NOT IN CONTRACT
NOM	NOMINAL
NO	NORMALLY OPEN
No	NUMBER
OA	OUTDOOR AIR
OAT	OUTDOOR AIR TEMPERATURE
OC	ON CENTER
OED	OPEN END DUCT WITH 1/2" FRAMED WIRE MESH SCREEN
%	PERCENT
P	PUMP
PD	PRESSURE DROP OR PUMP DISCHARGE
PH	PHASE
PRESS, P	PRESSURE
PSI	POUNDS PER SQUARE INCH
PSIG	POUNDS PER SQUARE INCH GAUGE
R	RETURN/EXHAUST/SUPPLY AIR REGISTER
RA	RETURN AIR
REQ'D	REQUIRED
RF	RETURN FAN
RLA	RUNNING LOAD AMPERES
RM	ROOM
RPM	REVOLUTIONS PER MINUTE
RPZ	REDUCED PRESSURE ZONE VALVE
RX	REMOVE EXISTING
SA	SUPPLY AIR
SAN	SANITARY, SOIL, WASTE
SENS	SENSIBLE
SF	SUPPLY FAN OR SQUARE FEET
TG	TRANSFER GRILLE
S/M	SHEET METAL
SP	STATIC PRESSURE
SPD	STATIC PRESSURE DROP
SPEC	SPECIFICATION
SQ	SQUARE
SQ FT	SQUARE FOOT
SS	START/STOP
S/S	STAINLESS STEEL
STL	STEEL
△ T	TEMPERATURE DROP
TBL	TABLE
TEMP, T	TEMPERATURE
TSP	TOTAL STATIC PRESSURE
TYP	TYPICAL
UH	UNIT HEATER (HEATING WATER)
V	VOLTS, VACUUM PIPE
VD	VOLUME DAMPER
VEL	VELOCITY
VENT	VENTILATION
VFD	VARIABLE FREQUENCY DRIVE
VTR	VENT TO ROOF
W	WIDTH
W/	WITH
WC	WATER COLUMN
WG	WATER GAUGE
WH	WALL HYDRANT
ZN	ZONE
W/O	WITHOUT

GENERAL NOTES

1. WORK SHALL CONFORM TO THE CONTRACT DRAWINGS, SPECIFICATIONS AND THE LATEST APPLICABLE INTERNATIONAL MECHANICAL AND PLUMBING CODE AND THE NATIONAL ELECTRIC CODE. WORK SHALL BE PERFORMED IN ACCORDANCE WITH NFPA 70, THE NATIONAL ELECTRICAL CODE, THE NATIONAL ELECTRICAL SAFETY CODE, OSHA AND NATIONAL SAFETY CODE REQUIREMENTS.
2. THE SCOPE OF WORK INDICATED IN THESE DOCUMENTS SHALL INCLUDE MECHANICAL AND ELECTRICAL SYSTEMS, FULLY ADJUSTED, TESTED AND READY TO USE. PROVIDE ITEMS NECESSARY TO COMPLETE THE SYSTEMS. EXAMINE WORK INDICATED FOR TRADES IN ORDER TO DETERMINE THE EXTENT OF THE WORK REQUIRED TO BE COMPLETED.
3. IT IS THE INTENTION OF THESE DRAWINGS TO CALL FOR FINISHED WORK, TESTED AND READY FOR OPERATION. WHEREVER THE WORD "PROVIDE" IS USED, IT SHALL MEAN "FURNISH AND INSTALL COMPLETE, TESTED AND READY FOR USE."
4. THE DRAWINGS ARE DIAGRAMMATIC AND DO NOT SHOW EVERY COMPONENT AND/OR ACCESSORY REQUIRED FOR A COMPLETE INSTALLATION. THE CONTRACTOR SHALL PROVIDE ITEMS NECESSARY FOR A PROPERLY WORKING SYSTEM IN COMPLIANCE WITH ACCEPTED INDUSTRY STANDARDS AND MANUFACTURER'S RECOMMENDATIONS.
5. PRIOR TO BID, THE CONTRACTOR SHALL VISIT THE SITE AND IDENTIFY ITEMS THAT MAY AFFECT THEIR BID. PRIOR TO THE INSTALLATION, FABRICATION, REMOVAL, OR RELOCATION OF ANY WORK, THE CONTRACTORS SHALL REVIEW THE ACTUAL CONDITIONS UNDER WHICH THE WORK IS TO BE PERFORMED AND SHALL COORDINATE WORK WITH THE PLANS, EXISTING EQUIPMENT AND SYSTEMS, BUILDING STRUCTURE AND WORK OF OTHER TRADES. WHERE CONFLICTS OCCUR, OR IF CONNECTIONS THERETO CAN NOT BE MADE, THE CONTRACTOR SHALL IMMEDIATELY NOTIFY THE ENGINEER PRIOR TO MATERIAL FABRICATION OR INSTALLATION.
6. WHERE THE WORK OF VARIOUS TRADES WILL BE INSTALLED IN CLOSE PROXIMITY TO ONE ANOTHER OR WHERE THERE IS EVIDENCE THAT THE WORK OF ONE TRADE WILL INTERFERE WITH WORK OF ANOTHER, THE CONTRACTOR SHALL WORK OUT SPACE CONDITIONS TO MAKE A SATISFACTORY ADJUSTMENT. IF THE CONTRACTOR ALLOWS ONE TRADE TO INSTALL HIS WORK BEFORE COORDINATING WITH WORK OF OTHER TRADES THE CONTRACTOR SHALL MAKE NECESSARY CHANGES TO CORRECT THE CONDITIONS IN A MANNER ACCEPTABLE TO THE OWNER AND THE CONTRACTOR SHALL BEAR THE COST OF SUCH CORRECTIONS.
7. THE CONTRACTOR SHALL LOCATE EQUIPMENT WHICH MUST BE SERVICED, OPERATED, OR MAINTAINED IN FULLY ACCESSIBLE POSITION. EQUIPMENT SHALL INCLUDE, BUT NOT BE LIMITED TO, VALVES, MOTORS, CONTROLLERS, DRAIN PANS, ETC. IF REQUIRED FOR ACCESSIBILITY, FURNISH ACCESS DOORS FOR THE PURPOSE. MINOR DEVIATIONS FROM DRAWINGS MAY BE MADE TO ALLOW FOR BETTER ACCESSIBILITY.
8. WORK IN OCCUPIED SPACE SHALL BE COORDINATED WITH THE OWNER. SHOULD ANY OUTAGES BE REQUIRED IN THE COURSE OF THIS PROJECT, THE CONTRACTOR SHALL COORDINATE SUCH OUTAGES WITH THE OWNER'S DESIGNATED REPRESENTATIVE, SCHEDULING ANY OUTAGES DURING THE NON WORKING HOURS, SO AS NOT TO EFFECT FACILITY OPERATIONS, 72 HOURS NOTICE WILL BE REQUIRED PRIOR TO ANY OUTAGE. NO OUTAGE MAY BE EXECUTED PRIOR TO APPROVAL OF THE OWNER'S DESIGNATED REPRESENTATIVE AND THE FACILITY MANAGER.
9. THE CONTRACTOR SHALL LEAVE THE ENTIRE MECHANICAL SYSTEM INSTALLED UNDER THIS CONTRACT IN PROPER WORKING ORDER AND SHALL, WITHOUT CHARGE, REPLACE ANY WORK OR MATERIALS WHICH DEVELOP DEFECTS WITHIN TWO YEARS FROM THE DATE OF FINAL ACCEPTANCE.
10. THE CONTRACTOR SHALL, DURING THE TWO YEAR WARRANTY PERIOD, BE RESPONSIBLE FOR PROPER REPAIR AND ADJUSTMENTS OF MECHANICAL SYSTEMS AND EQUIPMENT, APPARATUS, DEVICES ETC. INSTALLED BY HIM, AND DO WORK NECESSARY TO ENSURE EFFICIENT AND PROPER FUNCTIONING.
11. THE CONTRACTOR SHALL BE RESPONSIBLE FOR, AND SHALL INCUR FINANCIAL RESPONSIBILITIES FOR, ANY DAMAGES CAUSED BY OR RESULTING FROM DEFECTS IN HIS WORK.
12. WHEREVER PIPES, CONDUITS, OR OTHER ITEMS PASS THROUGH FIRE RATED WALLS AND FLOORS, THE SPACE BETWEEN THE ITEM AND THE MASONRY OR THE SPACE BETWEEN THE ITEM AND THE SLEEVE SHALL BE ADEQUATELY FIRE STOPPED WITH A NON COMBUSTIBLE, NON MELTING MATERIAL IN ACCORDANCE WITH NFPA STANDARDS.
13. WALL OPENINGS RESULTING FROM DEMOLITION SHALL BE CLOSED AND FINISHED TO MATCH EXISTING.
14. FINISHES DAMAGED DURING THE PROJECT SHALL BE REPAIRED TO MATCH EXISTING.

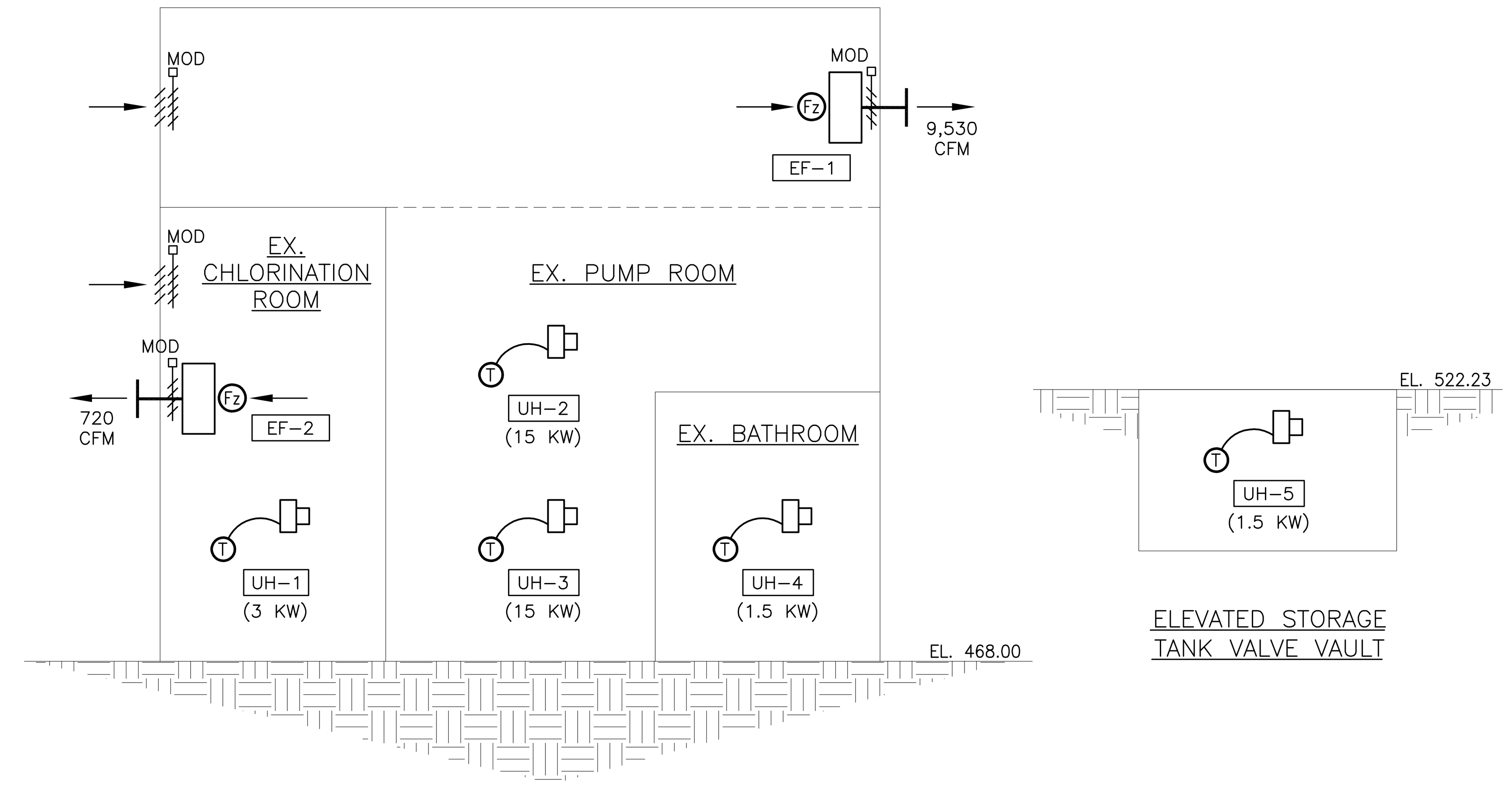

NOTES:

1. EF-1 AND EF-2 SHALL ENERGIZE WHEN THE SPACE TEMPERATURE EXCEEDS THE SPACE TEMPERATURE SETPOINT OF 85° F. INTERLOCK OPERATION OF THE EXHAUST FANS WITH THE MODS. A MANUAL OVERRIDE SWITCH SHALL ENERGIZE THE FAN REGARDLESS OF BUILDING CONDITIONS. THE FANS SHALL NOT RUN WHEN THE FREEZE STAT FALLS BELOW 45° F.
2. EACH ELECTRIC UNIT HEATER SHALL BE CONTROLLED BY A THERMOSTAT TO MAINTAIN SPACE SETPOINT AT 55° F (ADJUSTABLE).
3. REFER TO PLANS FOR LOCATION OF UNIT HEATERS.
4. SEE INSTRUMENTATION DRAWINGS FOR EXHAUST FAN CONTROL SCHEMATIC.

HVAC SCHEMATIC DIAGRAM

SCALE: NOT TO SCALE

ELECTRIC UNIT HEATER SCHEDULE

DESIG.	SERVICE	TYPE	kW	ELECTRIC	BASIS	NOTES
UH-1	CHLORINATION ROOM	HUNG	3	277/1	QMARK-MUH	1,2
UH-2	PUMP ROOM	HUNG	15	480/3	QMARK-MUH	1,2
UH-3	PUMP ROOM	HUNG	15	480/3	QMARK-MUH	1,2
UH-4	RESTROOM	WALL-MOUNTED	1.5	277/1	QMARK-CWH3000	1,3,4
UH-5	VAULT	WALL-MOUNTED	1.5	120/1	KING PAW-SS	3,4,5

NOTES:
1.) PROVIDE UNIT HEATER WITH FACTORY INSTALLED DISCONNECT.
2.) PROVIDE MANUFACTURER'S WALL-MOUNTED THERMOSTAT.
3.) PROVIDE WITH INTEGRAL THERMOSTAT.
4.) PROVIDE WITH SURFACE MOUNTING FRAME.
5.) PROVIDE WITH STAINLESS STEEL GRILLE.

EXHAUST FAN SCHEDULE

DESIG.	SERVICE	CFM	SP IN. W.G.	FAN RPM	MOTOR HP	TYPE	DRIVE	ELEC	FAN DAMPER SIZE	INTAKE DAMPER SIZE	BASIS	NOTE
EF-1	PUMP ROOM	9530	0.25	1725	1	SIDEWALL	BELT	460/3	3'8" x 3'8"	3'8" x 3'8"	GREENHECK SBE-3H36-10	1
EF-2	CHLORINE ROOM	720	0.20	1725	1/4	SIDEWALL	BELT	120/1	2'2" x 2'2"	1'-10" x 1'-8"	GREENHECK SBE-1H20-4	1

1.) DAMPER SHALL BE FULL SIZE OF LOUVER OPENING.

CONTRACT COMPLETION BOX
CONTRACTOR: ______
DATE COMPLETED: ______
INSPECTOR: ______
PIPE MATERIAL (Pressure Only) ______

DWG. FILENAME:

CITY OF BALTIMORE — CHIEF, OFFICE OF ENGINEERING AND CONSTRUCTION — DATE

REVISION – CITY OF BALTIMORE — CHIEF, FACILITIES ENGINEERING SECTION — DATE

SEAL: STATE OF MARYLAND — PATRICK C. HARRILL — NO. 35170 — REGISTERED PROFESSIONAL ENGINEER

DATE : 9/17/2020

PROFESSIONAL CERTIFICATION
I HEREBY CERTIFY THAT THESE DOCUMENTS WERE PREPARED OR APPROVED BY ME, AND THAT I AM A DULY LICENSED PROFESSIONAL ENGINEER UNDER THE LAWS OF THE STATE OF MARYLAND.
LICENSE NO. 35170, EXPIRATION DATE 06/06/2022.

ENGINEER: JOHNSON, MIRMIRAN & THOMPSON
40 WIGHT AVENUE
HUNT VALLEY, MD 21030

AS-BUILT PER RECORD PRINT
BY:
DATE:

DESIGN BY: PCH
DRAWN BY: GWK
CHKD BY: PCH

REVISION	BY	DATE	P.W.A. NO.	KEY SHEET	POSITION SHT	DRAWING SCALE	DEPARTMENT OF PUBLIC WORKS
			-	V-NE DD-SE	77 NW 5,6 82 NW 5,6	PLAN SCALE: AS SHOWN	SEE DRAWING 2020-0428 FOR ORIGINAL SIGNATURES
			R.O.W NO.			PROFILE SCALE: N/A N/A	
CONTRACT COMPLETION BOX			-				

BUREAU OF ENGINEERING AND CONSTRUCTION | HIGHWAYS | STRUCTURES | STORM DRAINS | SEWER | WATER | FIELD ENGINEER | BUR. OF ENGINEERING & CONSTRUCTION

SEE DRAWING 2020-0428 FOR ORIGINAL SIGNATURES

BALTIMORE COUNTY DEPARTMENT OF PUBLIC WORKS BUREAU OF ENGINEERING & CONSTRUCTION

SPARKS PUMPING STATION

HVAC GENERAL NOTES AND SCHEDULES

SPARKS WATER PUMPING STATION AND ELEVATED WATER STORAGE TANK IMPROVEMENTS

SUBDIVISION: SPARKS, MD ELECTION DIST. NO.: 8C3

SHEET DESIGNATION	CONTRACT NUMBER
H-1	20094WXO
	JOB ORDER NUMBER
	231-203-0035-0514
	SHEET 40 OF 71
	DRAWING NUMBER
	2020-0467
	FILE NO.:

BALTIMORE COUNTY MARYLAND

REV. 01/17

GENERAL SHEET NOTES:

1. MCC AND CONTROL PANELS NOT SHOWN FOR CLARITY. REFER TO ELECTRICAL DRAWINGS FOR DETAILS.
2. CONTRACTOR SHALL CLEAN VAULTS AFTER INSTALLATION OF SURGE RELIEF VALVES. AFTER VAULTS ARE CLEANED, CONTRACTOR SHALL CLEAN AND INSPECT ALL VAULT DRAINS.
3. WORK SHALL BE DONE IN ACCORDANCE WITH APPROVED SEQUENCE OF CONSTRUCTION TO MINIMIZE IMPACT TO STATION OPERATIONS.
4. CONTRACTOR SHALL FILL ALL UNUSED FLOOR OPENINGS FLUSH TO EXISTING SLAB.

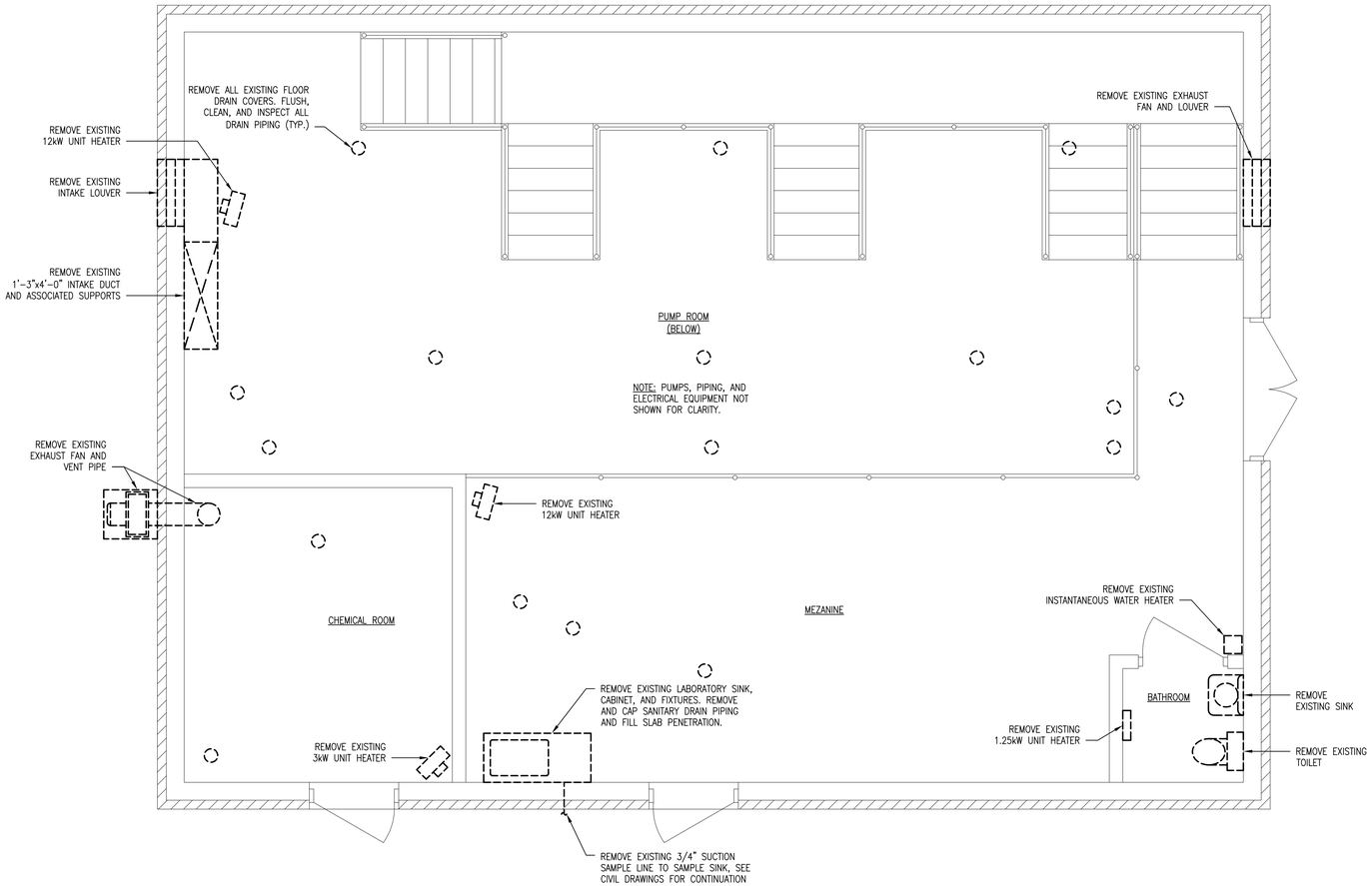

PUMPING STATION – DEMOLITION PLAN AT EL 473.50

SCALE: 3/8" = 1'-0"

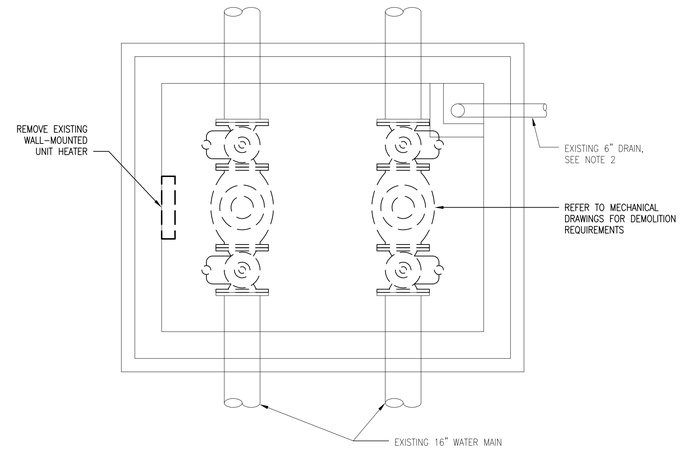

ELEVATED STORAGE TANK VALVE VAULT – DEMOLITION PLAN

SCALE: 3/8" = 1'-0"

1' 0 1' 2' 3'
SCALE: 3/8" = 1'-0"

CITY OF BALTIMORE	REVISION – CITY OF BALTIMORE
CHIEF, OFFICE OF ENGINEERING AND CONSTRUCTION — DATE	CHIEF, FACILITIES ENGINEERING SECTION — DATE

SEAL: STATE OF MARYLAND — PATRICK C. HARRIS — No.35170 — REGISTERED PROFESSIONAL ENGINEER
DATE: 9/17/2020

PROFESSIONAL CERTIFICATION

I HEREBY CERTIFY THAT THESE DOCUMENTS WERE PREPARED OR APPROVED BY ME, AND THAT I AM A DULY LICENSED PROFESSIONAL ENGINEER UNDER THE LAWS OF THE STATE OF MARYLAND.
LICENSE NO. 35170, EXPIRATION DATE 06/06/2022.

ENGINEER: JOHNSON, MIRMIRAN & THOMPSON
40 WIGHT AVENUE
HUNT VALLEY, MD 21030
AS-BUILT PER RECORD PRINT
BY:
DATE:

DESIGN BY: PCH
DRAWN BY: GWK
CHKD BY: PCH

REVISION	BY	DATE
CONTRACT COMPLETION BOX		

P.W.A. NO.	KEY SHEET	POSITION SHT
–	V-NE DD-SE	77 NW 5,6 82 NW 5,6
R.O.W NO.		
–		

DRAWING SCALE	
PLAN SCALE:	AS SHOWN
PROFILE SCALE:	N/A N/A

DEPARTMENT OF PUBLIC WORKS: SEE DRAWING 2020-0428 FOR ORIGINAL SIGNATURES

BUREAU OF ENGINEERING AND CONSTRUCTION	HIGHWAYS	STRUCTURES	STORM DRAINS	SEWER	WATER	FIELD ENGINEER	BUR. OF ENGINEERING & CONSTRUCTION
SEE DRAWING 2020-0428 FOR ORIGINAL SIGNATURES							

BALTIMORE COUNTY DEPARTMENT OF PUBLIC WORKS BUREAU OF ENGINEERING & CONSTRUCTION

SPARKS PUMPING STATION

PUMPING STATION AND ALTITUDE VAULT – DEMOLITION PLANS

SPARKS WATER PUMPING STATION AND ELEVATED WATER STORAGE TANK IMPROVEMENTS

SUBDIVISION: SPARKS, MD ELECTION DIST. NO.: 8C3

CONTRACT COMPLETION BOX
CONTRACTOR:
DATE COMPLETED:
INSPECTOR:
PIPE MATERIAL (Pressure Only)

DWG. FILENAME:

SHEET DESIGNATION	CONTRACT NUMBER
H-2	20094WXO
JOB ORDER NUMBER	231-203-0035-0514
SHEET 41 OF 71	
DRAWING NUMBER	2020-0468
FILE NO.:	ATV REVIV

BALTIMORE COUNTY MARYLAND

GENERAL SHEET NOTES:

1. ALL PIPING SUPPORTS HAVE NOT BEEN SHOWN ON THE DRAWING FOR CLARITY. SEE STRUCTURAL DRAWINGS FOR DETAILS.
2. WORK SHALL BE DONE IN ACCORDANCE WITH APPROVED SEQUENCE OF CONSTRUCTION TO MINIMIZE IMPACT TO STATION OPERATIONS.
3. CONTRACTOR SHALL FLUSH AND CLEAN ALL DRAIN LINES PRIOR TO NEW INSTALLATION.
4. CONTRACTOR SHALL FILL ALL UNUSED FLOOR OPENINGS FLUSH TO EXISTING SLAB.

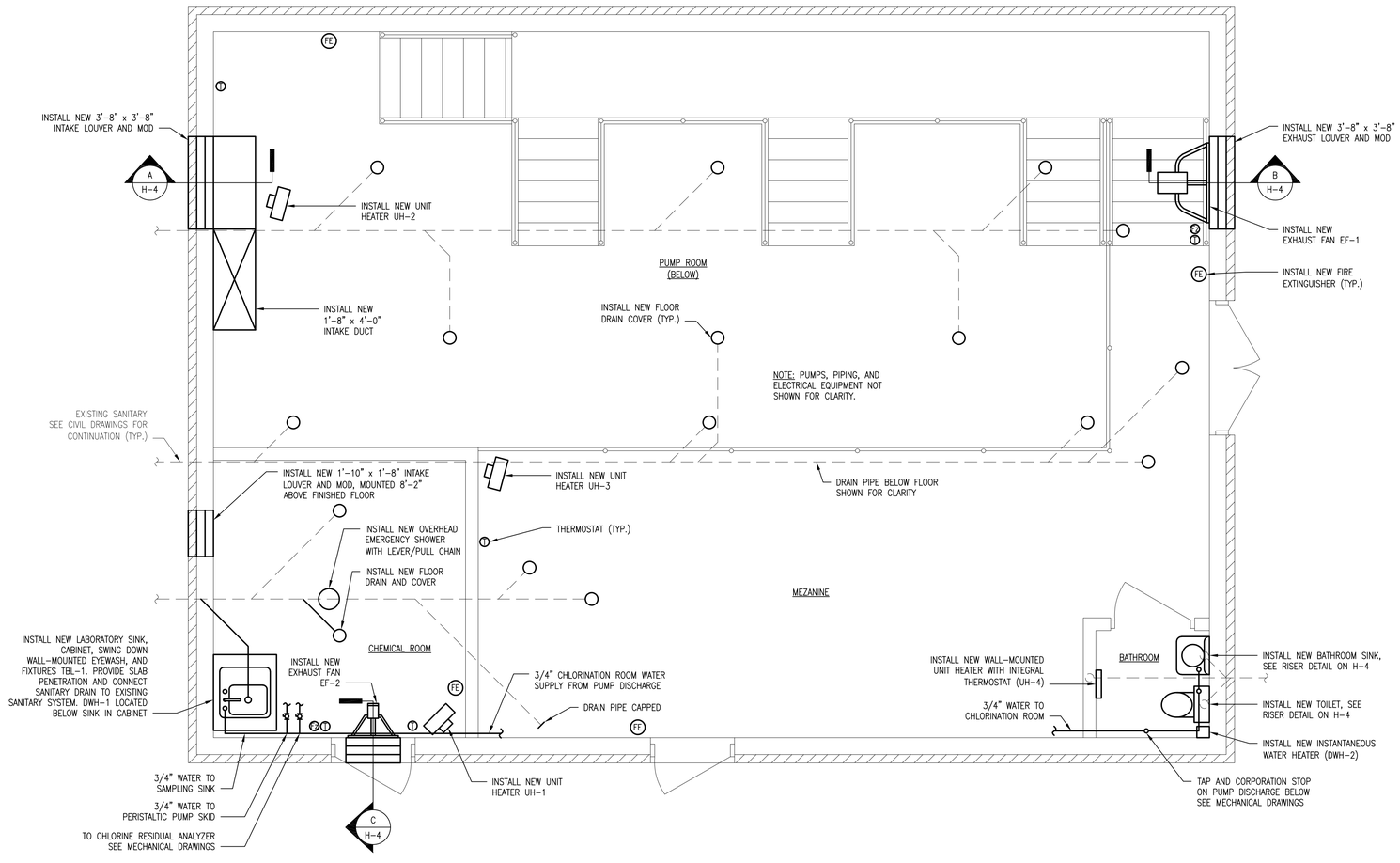

PUMPING STATION – NEW WORK PLAN AT EL 473.50

SCALE: 3/8" = 1'-0"

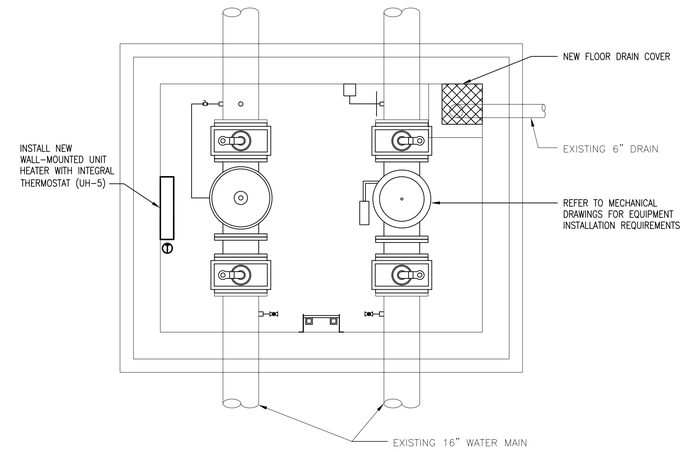

ELEVATED TANK VALVE VAULT – NEW WORK PLAN

SCALE: 3/8" = 1'-0"

CITY OF BALTIMORE	REVISION – CITY OF BALTIMORE
CHIEF, OFFICE OF ENGINEERING AND CONSTRUCTION — DATE	CHIEF, FACILITIES ENGINEERING SECTION — DATE

SEAL: STATE OF MARYLAND — PATRICK C. HARRIS — No. 35170 — REGISTERED PROFESSIONAL ENGINEER

DATE: 9/17/2020

PROFESSIONAL CERTIFICATION

I HEREBY CERTIFY THAT THESE DOCUMENTS WERE PREPARED OR APPROVED BY ME, AND THAT I AM A DULY LICENSED PROFESSIONAL ENGINEER UNDER THE LAWS OF THE STATE OF MARYLAND.

LICENSE NO. 35170, EXPIRATION DATE 06/06/2022

ENGINEER: JOHNSON, MIRMIRAN & THOMPSON
40 WIGHT AVENUE
HUNT VALLEY, MD 21030

AS-BUILT PER RECORD PRINT
BY:
DATE:

DESIGN BY: PCH
DRAWN BY: GWK
CHKD BY: PCH

REVISION	BY	DATE
CONTRACT COMPLETION BOX		

P.W.A. NO.	KEY SHEET	POSITION SHT
–	V-NE DD-SE	77 NW 5,6 82 NW 5,6
R.O.W NO.		
–		

DRAWING SCALE	
PLAN SCALE:	AS SHOWN
PROFILE SCALE:	N/A
	N/A

DEPARTMENT OF PUBLIC WORKS: SEE DRAWING 2020-0428 FOR ORIGINAL SIGNATURES

BUREAU OF ENGINEERING AND CONSTRUCTION	HIGHWAYS	STRUCTURES	STORM DRAINS	SEWER	WATER	FIELD ENGINEER	BUR. OF ENGINEERING & CONSTRUCTION
SEE DRAWING 2020-0428 FOR ORIGINAL SIGNATURES							

BALTIMORE COUNTY DEPARTMENT OF PUBLIC WORKS BUREAU OF ENGINEERING & CONSTRUCTION

SPARKS PUMPING STATION

PUMPING STATION AND ALTITUDE VAULT – NEW WORK PLANS

SPARKS WATER PUMPING STATION AND ELEVATED WATER STORAGE TANK IMPROVEMENTS

SUBDIVISION: SPARKS, MD ELECTION DIST. NO.: 8C3

1' 0 1' 2' 3'
SCALE: 3/8" = 1'-0"

CONTRACT COMPLETION BOX

CONTRACTOR:
DATE COMPLETED:
INSPECTOR:
PIPE MATERIAL (Pressure Only)

DWG. FILENAME:

SHEET DESIGNATION	CONTRACT NUMBER
H-3	20094WXO

BALTIMORE COUNTY MARYLAND

JOB ORDER NUMBER
231-203-0035-0514
SHEET 42 OF 71
DRAWING NUMBER
2020-0469
FILE NO.:

GENERAL SHEET NOTES:

1. WORK SHALL BE DONE IN ACCORDANCE WITH APPROVED SEQUENCE OF CONSTRUCTION TO MINIMIZE IMPACT TO STATION OPERATIONS.

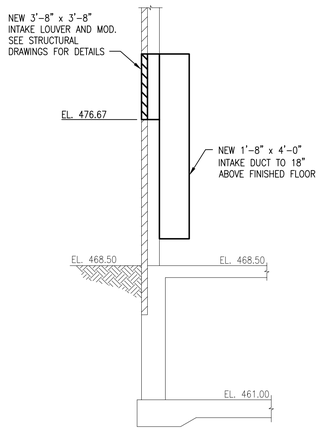

A H-3 NEW WORK SECTION
SCALE: 1/4" = 1'-0"

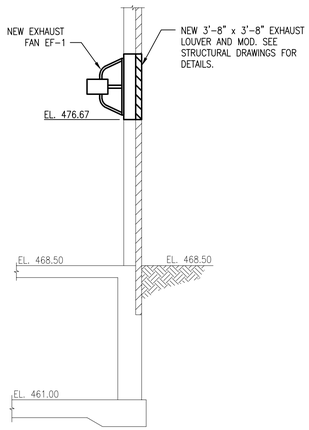

B H-3 NEW WORK SECTION
SCALE: 1/4" = 1'-0"

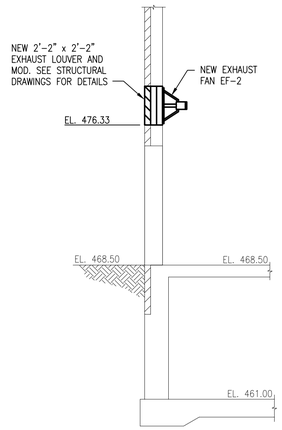

C H-3 NEW WORK SECTION
SCALE: 1/4" = 1'-0"

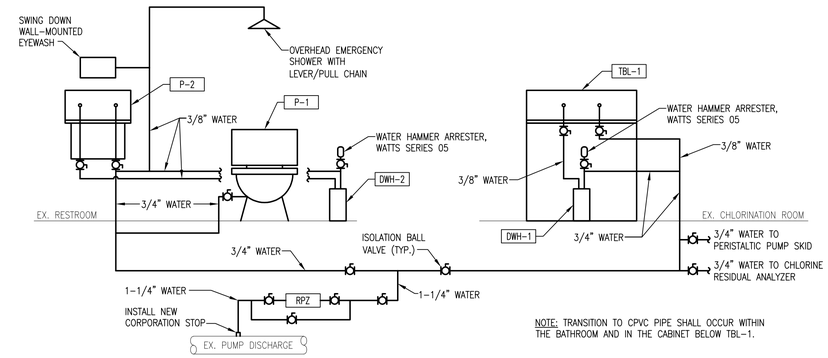

NOTE: TRANSITION TO CPVC PIPE SHALL OCCUR WITHIN THE BATHROOM AND IN THE CABINET BELOW TBL-1.

DOMESTIC WATER RISER – TYPICAL

SCALE: NOT TO SCALE

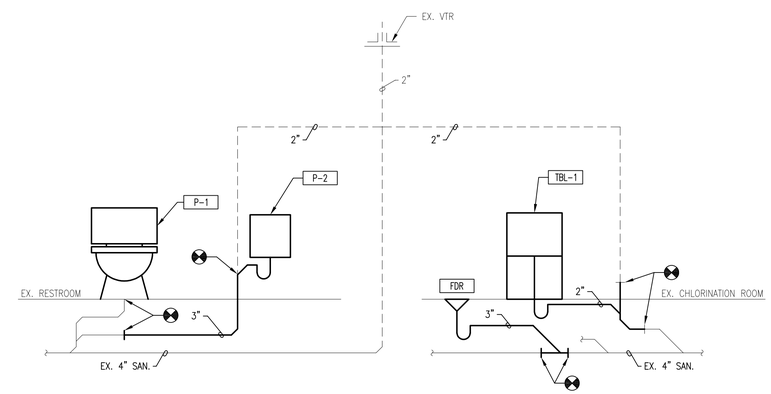

SANITARY RISER – TYPICAL

SCALE: NOT TO SCALE

WATER HEATER SCHEDULE

DESIG.	kW	ELEC	CONNECTIONS	BASIS	REMARK
DWH-1	4.1	208/1	3/8"	EEMAX SP4208	
DWH-2	4.1	208/1	3/8"	EEMAX SP4208	

NOTES:

PLUMBING FIXTURE SCHEDULE

DESIG.	FIXTURE	BASIS OF DESIGN DESCRIPTION	QTY	SAN SIZE (INCHES)	VENT SIZE (INCHES)	CW SIZE (INCHES)	HW SIZE (INCHES)	REMARKS
P-1	ADA WATER CLOSET	KOHLER ANGLESEY K-4386	1	4 1/2"	--	1 1/2"	--	
P-2	BATHROOM SINK	KOHLER K-2867	1	1 1/2"		3/8"	3/8"	

NOTES:

LABORATORY SINK, CABINET AND FIXTURES SCHEDULE

DESIG.	FIXTURE	BASIS OF DESIGN DESCRIPTION	QTY	LENGTH SIZE (INCHES)	WIDTH SIZE (INCHES)	HEIGHT SIZE (INCHES)	REMARKS
TBL-1	LAB SINK, CABINET AND FIXTURE	UNILINE LABORATORY FURNITURE	1	30	24	36	

NOTES:

CITY OF BALTIMORE	REVISION – CITY OF BALTIMORE
CHIEF, OFFICE OF ENGINEERING AND CONSTRUCTION — DATE	CHIEF, FACILITIES ENGINEERING SECTION — DATE

SEAL: STATE OF MARYLAND – PATRICK C. HARRIS – No. 35170 – REGISTERED PROFESSIONAL ENGINEER
DATE : 9/17/2020

PROFESSIONAL CERTIFICATION
I HEREBY CERTIFY THAT THESE DOCUMENTS WERE PREPARED OR APPROVED BY ME, AND THAT I AM A DULY LICENSED PROFESSIONAL ENGINEER UNDER THE LAWS OF THE STATE OF MARYLAND.
LICENSE NO. 35170 EXPIRATION DATE 06/06/2022

ENGINEER: JOHNSON, MIRMIRAN & THOMPSON
40 WIGHT AVENUE
HUNT VALLEY, MD 21030
AS-BUILT PER RECORD PRINT
BY:
DATE:

DESIGN BY: PCH
DRAWN BY: GWK
CHKD BY: PCH

REVISION	BY	DATE
CONTRACT COMPLETION BOX		

P.W.A. NO.	KEY SHEET	POSITION SHT
–	V-NE	77 NW 5,6
R.O.W NO.		
–		

DRAWING SCALE: PLAN SCALE: AS SHOWN; PROFILE SCALE: N/A; N/A

DEPARTMENT OF PUBLIC WORKS: SEE DRAWING 2020-0428 FOR ORIGINAL SIGNATURES

BUREAU OF ENGINEERING AND CONSTRUCTION	HIGHWAYS	STRUCTURES	STORM DRAINS	SEWER	WATER	FIELD ENGINEER	BUR. OF ENGINEERING & CONSTRUCTION
SEE DRAWING 2020-0428 FOR ORIGINAL SIGNATURES							

2' 0 2' 4'
SCALE: ¼"= 1'-0"

CONTRACT COMPLETION BOX
CONTRACTOR:
DATE COMPLETED:
INSPECTOR:
PIPE MATERIAL (Pressure Only)

DWG. FILENAME:

BALTIMORE COUNTY DEPARTMENT OF PUBLIC WORKS BUREAU OF ENGINEERING & CONSTRUCTION
SPARKS PUMPING STATION
HVAC DETAILS AND RISER DIAGRAMS
SPARKS WATER PUMPING STATION AND ELEVATED WATER STORAGE TANK IMPROVEMENTS
SUBDIVISION: SPARKS, MD ELECTION DIST. NO.: 8C3

SHEET DESIGNATION	CONTRACT NUMBER
H-4	20094WXO
JOB ORDER NUMBER	231-203-0035-0514
SHEET 43 OF 71	
DRAWING NUMBER	2020-0470
FILE NO.:	REV. 4/2/17

INSTRUMENT LINE SYMBOLS

- ELECTRIC POWER
- ELECTRIC SIGNAL
- INDICATES SERIAL DATA SIGNAL
- INSTRUMENT SUPPLY OR CONNECTION TO PROCESS
- NN – PIPE DIAMETER (INCHES)
- XXX – PIPE SERVICE – SEE ABBREVIATIONS
- YYY – PIPE MATERIAL – SEE ABBREVIATIONS
- CONTINUATION NUMBERS

NN – XXX – YYY

EQUIPMENT AND VALVE SYMBOLS

- CENTRIFUGAL PUMP (DRY PIT)
- PERISTALTIC PUMP
- GLOBE, GATE, OR OTHER IN-LINE VALVE
- UNION
- CHECK VALVE
- PLUG VALVE
- BALL VALVE, NORMALLY OPEN
- BALL VALVE, NORMALLY CLOSED
- 3-WAY BALL VALVE
- REDUCER
- BUTTERFLY VALVE
- BALL CHECK VALVE
- AIR RELEASE VALVE
- SURGE RELIEF VALVE
- CONE VALVE
- PRESSURE RELIEF VALVE
- EXISTING NEW — POINT OF CONNECTION
- STRAINER
- ULTRASONIC LEVEL SENSOR
- PULSATION DAMPENER
- CALIBRATION COLUMN
- BASKET STRAINER
- DIAPHRAGM
- ROTAMETER

INSTRUMENT AND FUNCTION SYMBOLS

NEW	EXISTING	DESCRIPTION
		FIELD MOUNTED
		FACE OF PANEL MOUNTED
		INTERIOR OF PANEL MOUNTED
		MOTOR CONTROL CENTER MOUNTED
		PANEL FACE MOUNTED PILOT LIGHT
		INSTRUMENTS SHARING COMMON HOUSING
		INTERIOR OF PANEL MOUNTED PILOT LIGHT
ABC 123	ABC 123	LETTERS INDICATE INSTRUMENT FUNCTION AND LOOP PER SCHEDULE
		PROGRAMMABLE CONTROLLER LOOP
		SOFTWARE DISPLAYED DATA

ELECTRICAL SYMBOLS

- LE — LEVEL ELEMENT
- LT — LEVEL TRANSMITTER
- PI — PRESSURE INSTRUMENT
- PT — PRESSURE TRANSMITTER
- PRESSURE SENSING DIAPHRAGM / ISOLATOR RING
- FUSE
- DISCONNECT
- M — ELECTRIC ACTUATOR
- M — ELECTROMAGNETIC FLOW METER
- VENTURI METER
- PS — PRESSURE SWITCH
- THERMOSTAT
- R — RADAR

GENERAL NOTES

1. ELECTRICAL SYMBOLS ARE DEFINED ON THE ELECTRICAL SYMBOL SHEET.
2. PROVIDE CONDUIT SEAL AS REQUIRED BY NEC.
3. CONTROL DIAGRAMS INDICATE THE SYSTEM OF CONTROL REQUIRED. EXACT NUMBER OF CONTROL CIRCUIT WIRES AND CONNECTIONS SHALL DEPEND ON THE MANUFACTURER'S EQUIPMENT FURNISHED AND SHALL BE VERIFIED BY THE CONTRACTOR.
4. FOR PROCESS CONTROL STRATEGIES, REFER TO SPECIFICATION SECTION 17500.
5. THE I/O LOOP NUMBERS SHOWN ON THE DRAWINGS ARE SHOWN BASED ON THE BEST AVAILABLE INFORMATION DURING DESIGN. I/O TAGS WITH LOOP NUMBERS IN THE 900s ARE ANTICIPATED TO REQUIRE CREATION OF NEW POINTS, TAGS, ETC. ALL I/O TAGS SHALL BE COORDINATED WITH THE EXISTING I/O TAGS IMPLEMENTED AT THE LOCAL PLCs AND WITH THE EQUIPMENT AT THE ASHBURTON TCC TO ENSURE THAT DUPLICATE TAGS ARE NOT USED OR CREATED.

ABBREVIATIONS

AI	ANALOG SIGNAL INDICATOR
ATS	AUTOMATIC TRANSFER SWITCH
CBM	CABLE BY MANUFACTURER
CI	CAST IRON
CV	CONTROL VALVE
CPVC	CHLORINATED POLYVINYL CHLORIDE
DI	DUCTILE IRON
DIP	DUCTILE IRON PIPE
ESD	EMERGENCY SHUT DOWN
ETM	ELAPSED TIME METER
ETR	EXISTING TO REMAIN
FE	FLOW ELEMENT
FIT	FLOW INDICATOR AND TRANSMITTER
FS	FLOW SWITCH
GRD	GROUND
HMI	HUMAN MACHINE INTERFACE
HOA	HAND/OFF/AUTO
HS	HAND SWITCH
HYPO	SODIUM HYPOCHLORITE
I/I	CURRENT TO CURRENT TRANSMITTER
I/O	INPUT/OUTPUT
ISB	INTRINSIC SAFETY BARRIER
JB	JUNCTION BOX
LI	LEVEL INDICATOR
LIT	LEVEL INDICATING TRANSMITTER
LOR	LOCAL/OFF/REMOTE
L/R	LOCAL/REMOTE SWITCH
LS	LEVEL SWITCH, LIMIT SWITCH
MCC	MOTOR CONTROL CENTER
OIT	OPERATOR INTERFACE TERMINAL
O/L	OVERLOAD
PB	PUSHBUTTON
PE	PRESSURE SENSOR
PCP	PUMP CONTROL PANEL
PI	PRESSURE INDICATOR
PIT	PRESSURE INDICATOR AND TRANSMITTER
PLC	PROGRAMMABLE LOGIC CONTROLLERS
POLY	POLYETHYLENE
PT	PRESSURE TRANSMITTER
PVC	POLYVINYL CHLORIDE
PW	POTABLE WATER
R	RELAY
RTU	REMOTE TELEMETRY UNIT
RVSS	REDUCED VOLTAGE SOFT START
SAMP	SAMPLE PIPE
SCADA	SUPERVISORY CONTROL AND DATA ACQUISITION
SS	STAINLESS STEEL
TE	TEMPERATURE SENSOR(S)
TMR	TIMER
TS	TEMPERATURE SWITCH
TSP	TWISTED SHIELDED PAIR
TVSS	TRANSIENT VOLTAGE SURGE SUPPRESSOR
UPS	UNINTERRUPTABLE POWER SUPPLY
VFD	VARIABLE FREQUENCY DRIVE
XP	EXPLOSION PROOF

INPUT AND OUTPUT SIGNALS TO PROCESS CONTROLLERS

- ABC123 — ANALOG INPUT (AI)
- ABC123 — ANALOG MODULATING OUTPUT (AO)
- ABC123 — DIGITAL INPUT (DI)
- ABC123 — CONTROL OUTPUT (DO) — X

NOTE: ABC123 IS I/O DESIGNATION

CITY OF BALTIMORE	REVISION – CITY OF BALTIMORE
CHIEF, OFFICE OF ENGINEERING AND CONSTRUCTION — DATE	CHIEF, FACILITIES ENGINEERING SECTION — DATE

SEAL: STATE OF MARYLAND — CHARLES W. KNAPP — No. 31555 — PROFESSIONAL ENGINEER

DATE: 9/17/2020

PROFESSIONAL CERTIFICATION

I HEREBY CERTIFY THAT THESE DOCUMENTS WERE PREPARED OR APPROVED BY ME, AND THAT I AM A DULY LICENSED PROFESSIONAL ENGINEER UNDER THE LAWS OF THE STATE OF MARYLAND. LICENSE NO. 31555, EXPIRATION DATE 03/15/2021

ENGINEER: JOHNSON, MIRMIRAN & THOMPSON, 40 WIGHT AVENUE, HUNT VALLEY, MD 21030

AS-BUILT PER RECORD PRINT — BY: DATE:

DESIGN BY: DSC — DRAWN BY: GWK — CHKD BY: BCA

REVISION	BY	DATE
CONTRACT COMPLETION BOX		

P.W.A. NO.	KEY SHEET	POSITION SHT
–	V-NE DD-SE	77 NW 5,6 82 NW 5,6
R.O.W NO.		
–		

DRAWING SCALE	
PLAN SCALE:	AS SHOWN
PROFILE SCALE:	N/A
	N/A

DEPARTMENT OF PUBLIC WORKS: SEE DRAWING 2020-0428 FOR ORIGINAL SIGNATURES

BUREAU OF ENGINEERING AND CONSTRUCTION	HIGHWAYS	STRUCTURES	STORM DRAINS	SEWER	WATER	FIELD ENGINEER	BUR. OF ENGINEERING & CONSTRUCTION
SEE DRAWING 2020-0428 FOR original signatures							

CONTRACT COMPLETION BOX

CONTRACTOR: _____

DATE COMPLETED: _____

INSPECTOR: _____

PIPE MATERIAL (Pressure Only) _____

DWG. FILENAME:

BALTIMORE COUNTY DEPARTMENT OF PUBLIC WORKS BUREAU OF ENGINEERING & CONSTRUCTION

SPARKS PUMPING STATION

INSTRUMENTATION NOTES, LEGEND, AND ABBREVIATIONS

SPARKS WATER PUMPING STATION AND ELEVATED WATER STORAGE TANK IMPROVEMENTS

SUBDIVISION: SPARKS, MD ELECTION DIST. NO.: 8C3

SHEET DESIGNATION	CONTRACT NUMBER
I-1	20094WXO
JOB ORDER NUMBER	231-203-0035-0514
SHEET 44 OF 71	
DRAWING NUMBER	2020-0471
FILE NO.:	REV. 4/17

BALTIMORE COUNTY MARYLAND

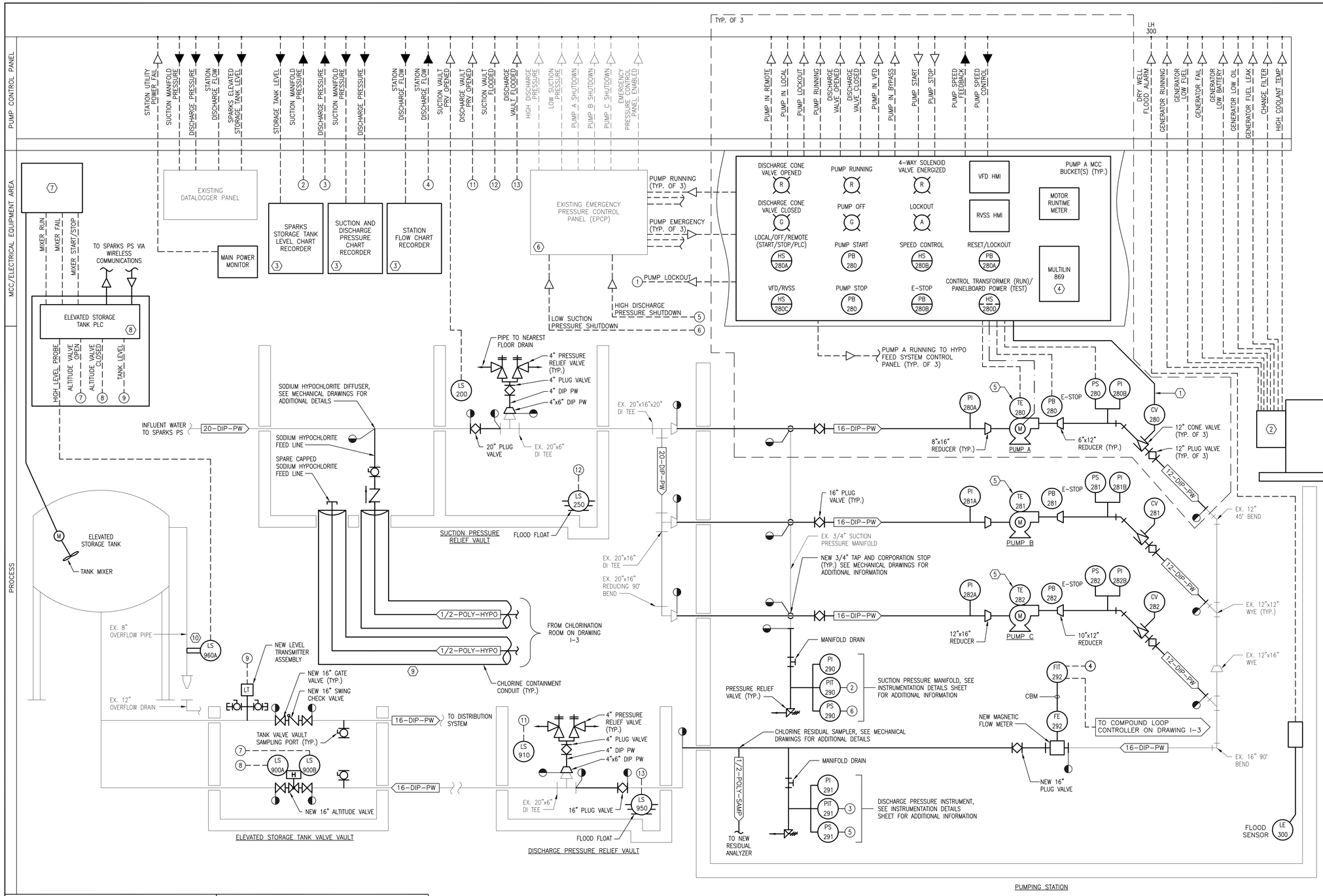

GENERAL NOTES:

1. REFER TO IINSTRUMENTATION DETAIL SHEET FOR PRESSURE INSTRUMENT DETAILS.
2. NOT ALL EXISTING INPUTS AND OUTPUTS ARE SHOWN. THE CONTRACTOR IS RESPONSIBLE FOR PROTECTION AND, IF NECESSARY, RELOCATION OF ALL EXISTING I/O DISTURBED OR IMPACTED BY CONSTRUCTION ACTIVITIES PERFORMED AS PART OF THIS CONTRACT.
3. WORK SHALL BE DONE IN ACCORDANCE WITH APPROVED SEQUENCE OF CONSTRUCTION TO MINIMIZE IMPACT TO STATION OPERATIONS.

SHEET KEYNOTES:

1. CONTRACTOR SHALL INSTALL NEW WIRING AND CONDUIT FOR CONNECTION OF THE FOLLOWING SIGNALS BETWEEN THE CONE VALVE CONTROL PANEL AND THE MCC. AT A MINIMUM THIS INCLUDES TWO (2) "FAST CLOSE" SOLENOIDS, ONE (1) "OPEN" SOLENOID, AND THREE (3) LIMIT SWITCHES FOR "OPENED", "95% CLOSED", AND "CLOSED" INDICATION.
2. GENERATOR CONTROL PANEL.
3. NEW DIGITAL PAPERLESS GRAPHIC RECORDER. REFER TO CONTRACT SPECIFICATIONS FOR REQUIREMENTS.
4. MULTILIN 869 FOR MOTOR PROTECTION AND INTEGRATION OF MOTOR AND PUMP RTDs. SEE TYPICAL PUMP CONTROL SCHEMATICS FOR ADDITIONAL INFORMATION.
5. 6 MOTOR STATOR RTDs, 2 MOTOR BEARING RTDs, 2 PUMP BEARING RTDs, AND 1 AMBIENT RTD. SEE TYPICAL PUMP CONTROL SCHEMATICS FOR ADDITIONAL INFORMATION.
6. CONTRACTOR SHALL COORDINATE PUMP CONTROL INTEGRATION WITH THE EX. EPCP. EPCP TO STAY IN SERVICE THROUGHOUT CONSTRUCTION. SEE ADDITIONAL DETAILS ON I-8.
7. PROVIDE TANK MIXER LOCAL CONTROL PANEL PER REQUIREMENTS OF CONTRACT SPECIFICATIONS.
8. REFER TO CONTRACT SPECIFICATIONS FOR NEW TANK LOCAL CONTROL PANEL REQUIREMENTS.
9. REFER TO CONTRACT SPECIFICATIONS FOR CONTAINMENT PIPE REQUIREMENTS.
10. NEW OVERFLOW SENSOR. REFER TO DRAWING M-10 FOR DETAILS. THE FINAL LOCATION SHALL BE COORDINATED IN THE FIELD. SENSOR SHALL COMMUNICATE WITH THE TANK LOCAL CONTROL PANEL TO ALLOW MONITORING OF OVERFLOW EVENT.

CITY OF BALTIMORE	REVISION – CITY OF BALTIMORE
CHIEF, OFFICE OF ENGINEERING AND CONSTRUCTION — DATE	CHIEF, FACILITIES ENGINEERING SECTION — DATE

SEAL: STATE OF MARYLAND — CHARLES W. THOMPSON — No. 31555 — PROFESSIONAL ENGINEER
DATE: 9/17/2020

PROFESSIONAL CERTIFICATION

I HEREBY CERTIFY THAT THESE DOCUMENTS WERE PREPARED OR APPROVED BY ME, AND THAT I AM A DULY LICENSED PROFESSIONAL ENGINEER UNDER THE LAWS OF THE STATE OF MARYLAND.
LICENSE NO. 31555, EXPIRATION DATE 03/15/2021

ENGINEER: JOHNSON, MIRMIRAN & THOMPSON
40 WIGHT AVENUE
HUNT VALLEY, MD 21030

AS-BUILT PER RECORD PRINT
BY:
DATE:

DESIGN BY: DSC
DRAWN BY: GWK
CHKD BY: BCA

REVISION	BY	DATE
CONTRACT COMPLETION BOX		

P.W.A. NO.	KEY SHEET	POSITION SHT
–	V-NE DD-SE	77 NW 5,6 82 NW 5,6
R.O.W NO.		
–		

DRAWING SCALE	
PLAN SCALE:	AS SHOWN
PROFILE SCALE:	N/A
	N/A

DEPARTMENT OF PUBLIC WORKS: SEE DRAWING 2020-0428 FOR ORIGINAL SIGNATURES

BUREAU OF ENGINEERING AND CONSTRUCTION	HIGHWAYS	STRUCTURES	STORM DRAINS	SEWER	WATER	FIELD ENGINEER	BUR. OF ENGINEERING & CONSTRUCTION
SEE DRAWING 2020-0428 FOR ORIGINAL SIGNATURES							

CONTRACT COMPLETION BOX
CONTRACTOR:
DATE COMPLETED:
INSPECTOR:
PIPE MATERIAL (Pressure Only)
DWG. FILENAME:

BALTIMORE COUNTY DEPARTMENT OF PUBLIC WORKS BUREAU OF ENGINEERING & CONSTRUCTION

SPARKS PUMPING STATION

PUMP STATION – P&ID

SPARKS WATER PUMPING STATION AND ELEVATED WATER STORAGE TANK IMPROVEMENTS

SUBDIVISION: SPARKS, MD ELECTION DIST. NO.: 8C3

SHEET DESIGNATION	CONTRACT NUMBER
I-2	20094WXO
JOB ORDER NUMBER	231-203-0035-0514
SHEET 45 OF 71	
DRAWING NUMBER	2020-0472
FILE NO.:	REV. 01/19

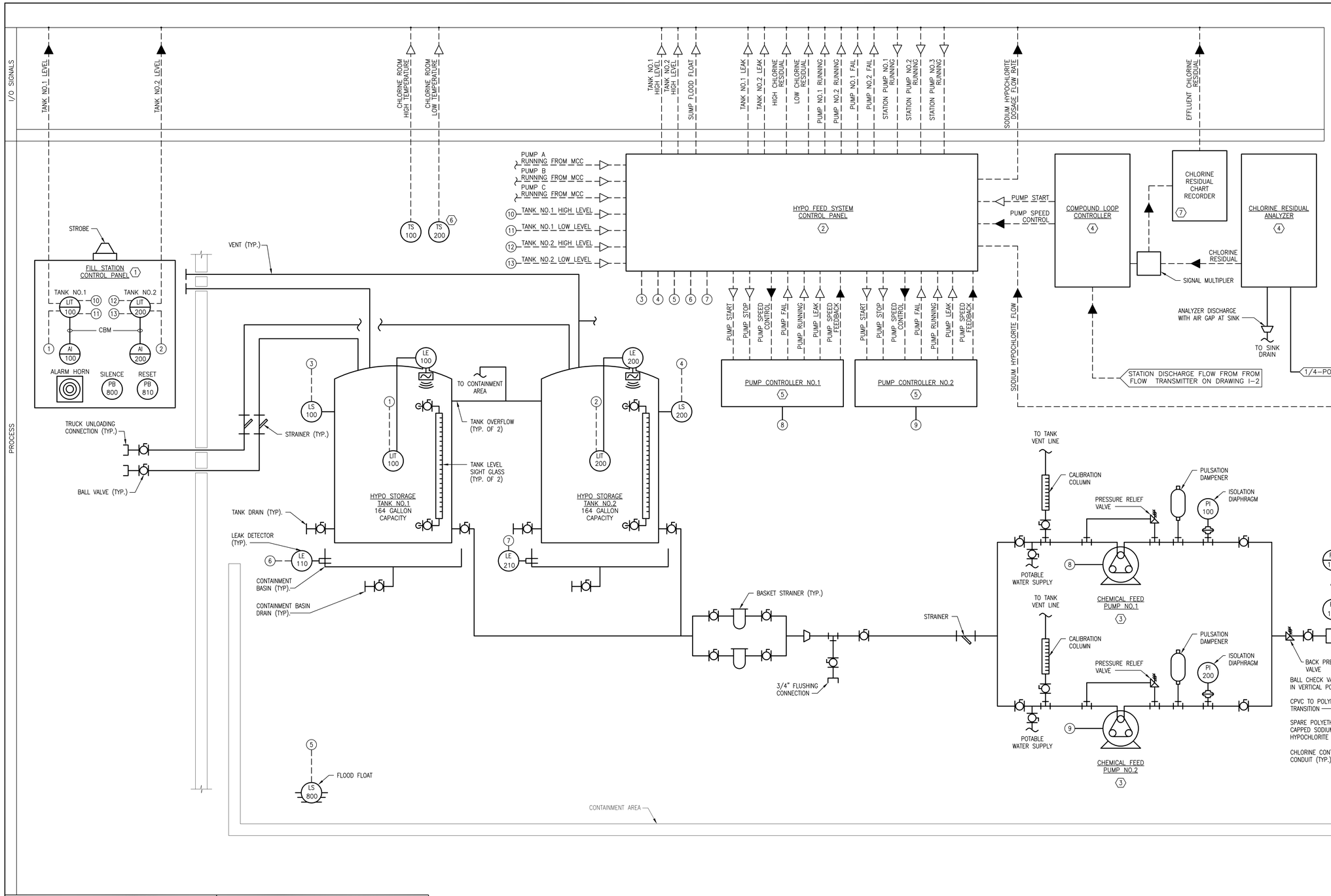

GENERAL NOTES:

1. NOT ALL EXISTING INPUTS AND OUTPUTS ARE SHOWN. THE CONTRACTOR IS RESPONSBILE FOR PROTECTION AND, IF NECESSARY, RELOCATION OF ALL EXISTING I/O DISTURBED OR IMPACTED BY CONSTRUCTION ACTIVITIES PERFORMED AS PART OF THIS CONTRACT.
2. ALL CONDUIT MAY BE EXTENDED FROM A LOCATION BELOW THE MEZZANINE OR COMPLETELY REMOVED AND REPLACED. ALL NEW WIRING SHALL BE PROVIDED BETWEEN THE EXISTING EQUIPMENT AND THE PUMP CONTROL PANEL AND NEW ELECTRICAL EQUIPMENT.
3. WORK SHALL BE DONE IN ACCORDANCE WITH APPROVED SEQUENCE OF CONSTRUCTION TO MINIMIZE IMPACT TO STATION OPERATIONS.
4. NOT ALL PLUMBING SYSTEM COMPONENTS HAVE BEEN SHOWN FOR CLARITY. SEE H DRAWINGS FOR DETAILS.

SHEET KEYNOTES:

1. SEE I-14 FOR HYPO FILL STATION CONTROL PANEL ELEVATION. CONTRACTOR SHALL PROVIDE NECESSARY SIGNAL MULTIPLIERS AND TRANSMITTERS TO PROVIDE THE SIGNAL AS SHOWN.
2. SEE I-14 FOR HYPO FEED SYSTEM CONTROL PANEL ELEVATION.
3. SEE SPECIFICATION 15260 SODIUM HYPOCHLORITE SUPPLY SYSTEM FOR ADDITIONAL INFORMATION ON CHEMICAL FEED PUMPS.
4. SEE SPECIFICATION 15260 SODIUM HYPOCHLORITE SUPPLY SYSTEM FOR ADDITIONAL INFORMATION ON CHLORINE RESIDUAL ANALYZER AND COMPOUND LOOP CONTROLLER.
5. PUMP CONTROLLERS INTEGRAL TO PUMP
6. TEMPERATURE SWITCHES TO BE MOUNTED ON WALL IN ACCESSIBLE LOCATION.
7. NEW DIGITAL PAPERLESS GRAPHIC RECORDER. REFER TO CONTRACT SPECIFICATIONS FOR REQUIREMENTS.

CITY OF BALTIMORE	REVISION – CITY OF BALTIMORE
CHIEF, OFFICE OF ENGINEERING AND CONSTRUCTION — DATE	CHIEF, FACILITIES ENGINEERING SECTION — DATE

SEAL: STATE OF MARYLAND — CHRISTOPHER B. CASTRANOVA — No. 31555 — PROFESSIONAL ENGINEER

DATE : 9/17/2020

PROFESSIONAL CERTIFICATION

I HEREBY CERTIFY THAT THESE DOCUMENTS WERE PREPARED OR APPROVED BY ME, AND THAT I AM A DULY LICENSED PROFESSIONAL ENGINEER UNDER THE LAWS OF THE STATE OF MARYLAND.
LICENSE NO. 31555, EXPIRATION DATE 03/15/2021.

ENGINEER: JOHNSON, MIRMIRAN & THOMPSON
40 WIGHT AVENUE
HUNT VALLEY, MD 21030

AS-BUILT PER RECORD PRINT
BY:
DATE:

DESIGN BY: DSC
DRAWN BY: GWK
CHKD BY: BCA

REVISION	BY	DATE
CONTRACT COMPLETION BOX		

P.W.A. NO.	KEY SHEET	POSITION SHT
–	V-NE	77 NW 5,6
R.O.W NO.		
–		

DRAWING SCALE	
PLAN SCALE:	AS SHOWN
PROFILE SCALE:	N/A
	N/A

DEPARTMENT OF PUBLIC WORKS

SEE DRAWING 2020-0428 FOR ORIGINAL SIGNATURES

BUREAU OF ENGINEERING AND CONSTRUCTION	HIGHWAYS	STRUCTURES	STORM DRAINS	SEWER	WATER	FIELD ENGINEER	BUR. OF ENGINEERING & CONSTRUCTION
SEE DRAWING 2020-0428 FOR ORIGINAL SIGNATURES							

BALTIMORE COUNTY DEPARTMENT OF PUBLIC WORKS BUREAU OF ENGINEERING & CONSTRUCTION

SPARKS PUMPING STATION

SODIUM HYPOCHLORITE FEED SYSTEM – P&ID

SPARKS WATER PUMPING STATION AND ELEVATED WATER STORAGE TANK IMPROVEMENTS

SUBDIVISION: SPARKS, MD ELECTION DIST. NO.: 8C3

CONTRACT COMPLETION BOX
CONTRACTOR:
DATE COMPLETED:
INSPECTOR:
PIPE MATERIAL (Pressure Only)

DWG. FILENAME:

SHEET DESIGNATION	CONTRACT NUMBER
I-3	20094WXO
JOB ORDER NUMBER	231-203-0035-0514
SHEET 46 OF 71	
DRAWING NUMBER	2020-0473
FILE NO.:	REV. 4/17

BALTIMORE COUNTY MARYLAND

GENERAL SHEET NOTES:

1. CONTRACTOR SHALL COORDINATE WITH THE CITY AT LEAST 7 DAYS BEFORE START OF DEMOLITION ACTIVITIES FOR CITY TO TAG ITEMS TO BE SALVAGED.
2. THE CONTRACTOR IS RESPONSIBLE FOR PROVIDING ALL MEANS FOR ISOLATING AND DRAINING THE LINES.
3. REFER TO SPECIFICATION 02412 FOR GENERAL DEMOLITION REQUIREMENTS; SPECIFICALLY, DEMOLITION OF ANY EQUIPMENT SHALL INCLUDE ALL ASSOCIATED INSTRUMENTATION AND ELECTRICAL EQUIPMENT.
4. REFER TO SPECIFICATION 01300 FOR GENERAL SEQUENCING REQUIREMENTS.
5. WORK SHALL BE DONE IN ACCORDANCE WITH APPROVED SEQUENCE OF CONSTRUCTION TO MINIMIZE IMPACT TO STATION OPERATIONS.

SHEET KEYNOTES:

1. DEMOLISH EXISTING PRESSURE INSTRUMENT (TYP.)
2. DEMOLISH EXISTING E-STOP PUSHBUTTON (TYP.)
3. DEMOLISH EXISTING FLOW SWITCH (TYP.)
4. DEMOLISH EXISTING METER.
5. DEMOLISH EXISTING CONE VALVE ACTUATOR AND CONTROL PANEL (TYP.)

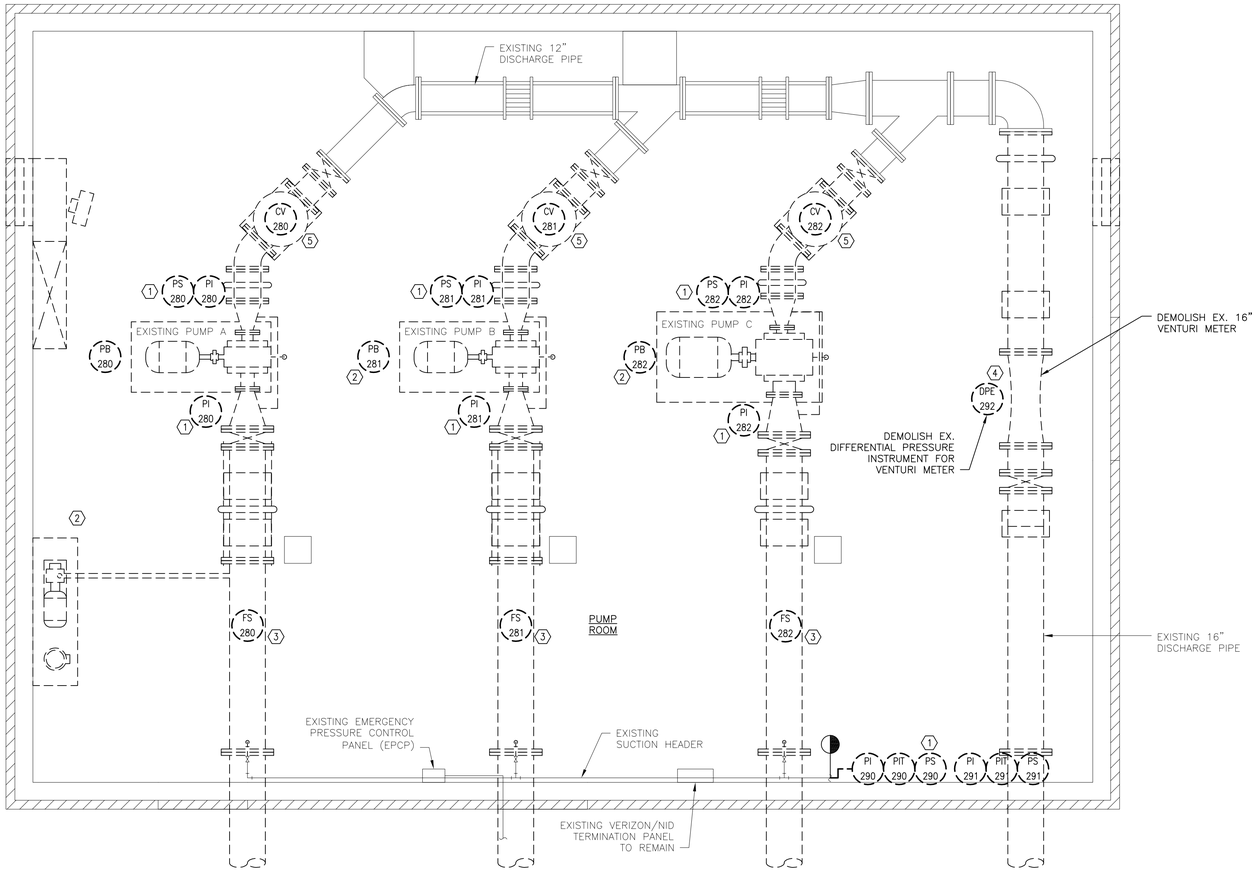

PUMPING STATION – DEMOLITION PLAN AT EL 463.50

SCALE: 3/8" = 1'-0"

CITY OF BALTIMORE	REVISION – CITY OF BALTIMORE
CHIEF, OFFICE OF ENGINEERING AND CONSTRUCTION DATE	CHIEF, FACILITIES ENGINEERING SECTION DATE

SEAL: STATE OF MARYLAND CHATPOWS SAVAKARINI No. 31555 PROFESSIONAL ENGINEER

DATE: 9/17/2020

PROFESSIONAL CERTIFICATION

I HEREBY CERTIFY THAT THESE DOCUMENTS WERE PREPARED OR APPROVED BY ME, AND THAT I AM A DULY LICENSED PROFESSIONAL ENGINEER UNDER THE LAWS OF THE STATE OF MARYLAND.

LICENSE NO. 31555, EXPIRATION DATE 03/15/2021

ENGINEER: JOHNSON, MIRMIRAN & THOMPSON
40 WIGHT AVENUE
HUNT VALLEY, MD 21030

AS-BUILT PER RECORD PRINT

BY:
DATE:

DESIGN BY: DSC
DRAWN BY: GWK
CHKD BY: BCA

REVISION	BY	DATE
CONTRACT COMPLETION BOX		

P.W.A. NO.	KEY SHEET	POSITION SHT
–	V-NE	77 NW 5,6
R.O.W NO.		
–		

DRAWING SCALE	
PLAN SCALE:	AS SHOWN
PROFILE SCALE:	N/A
	N/A

DEPARTMENT OF PUBLIC WORKS

SEE DRAWING 2020-0428 FOR ORIGINAL SIGNATURES

BUREAU OF ENGINEERING AND CONSTRUCTION	HIGHWAYS	STRUCTURES	STORM DRAINS	SEWER	WATER	FIELD ENGINEER	BUR. OF ENGINEERING & CONSTRUCTION

SEE DRAWING 2020-0428 FOR ORIGINAL SIGNATURES

1' 0 1' 2' 3'
SCALE: 3/8"= 1'-0"

BALTIMORE COUNTY DEPARTMENT OF PUBLIC WORKS BUREAU OF ENGINEERING & CONSTRUCTION

SPARKS PUMPING STATION

PUMPING STATION – INSTRUMENTATION DEMOLITION PLAN

SPARKS WATER PUMPING STATION AND ELEVATED WATER STORAGE TANK IMPROVEMENTS

SUBDIVISION: SPARKS, MD ELECTION DIST. NO.: 8C3

CONTRACT COMPLETION BOX

CONTRACTOR:
DATE COMPLETED:
INSPECTOR:
PIPE MATERIAL (Pressure Only)

DWG. FILENAME:

SHEET DESIGNATION	CONTRACT NUMBER
I-4	20094WXO

BALTIMORE COUNTY MARYLAND

JOB ORDER NUMBER
231-203-0035-0514
SHEET 47 OF 71
DRAWING NUMBER
2020-0474
FILE NO.:
REV. 02/17

GENERAL SHEET NOTES:

1. CONTRACTOR SHALL COORDINATE WITH THE CITY AT LEAST 7 DAYS BEFORE START OF DEMOLITION ACTIVITIES FOR CITY TO TAG ITEMS TO BE SALVAGED.
2. THE CONTRACTOR IS RESPONSIBLE FOR PROVIDING ALL MEANS FOR ISOLATING AND DRAINING LINES.
3. REFER TO SPECIFICATION 02412 FOR GENERAL DEMOLITION REQUIREMENTS; SPECIFICALLY, DEMOLITION OF ANY EQUIPMENT SHALL INCLUDE ALL ASSOCIATED INSTRUMENTATION AND ELECTRICAL EQUIPMENT.
4. REFER TO SPECIFICATION 01300 FOR GENERAL SEQUENCING REQUIREMENTS.
5. WORK SHALL BE DONE IN ACCORDANCE WITH APPROVED SEQUENCE OF CONSTRUCTION TO MINIMIZE IMPACT TO STATION OPERATIONS.

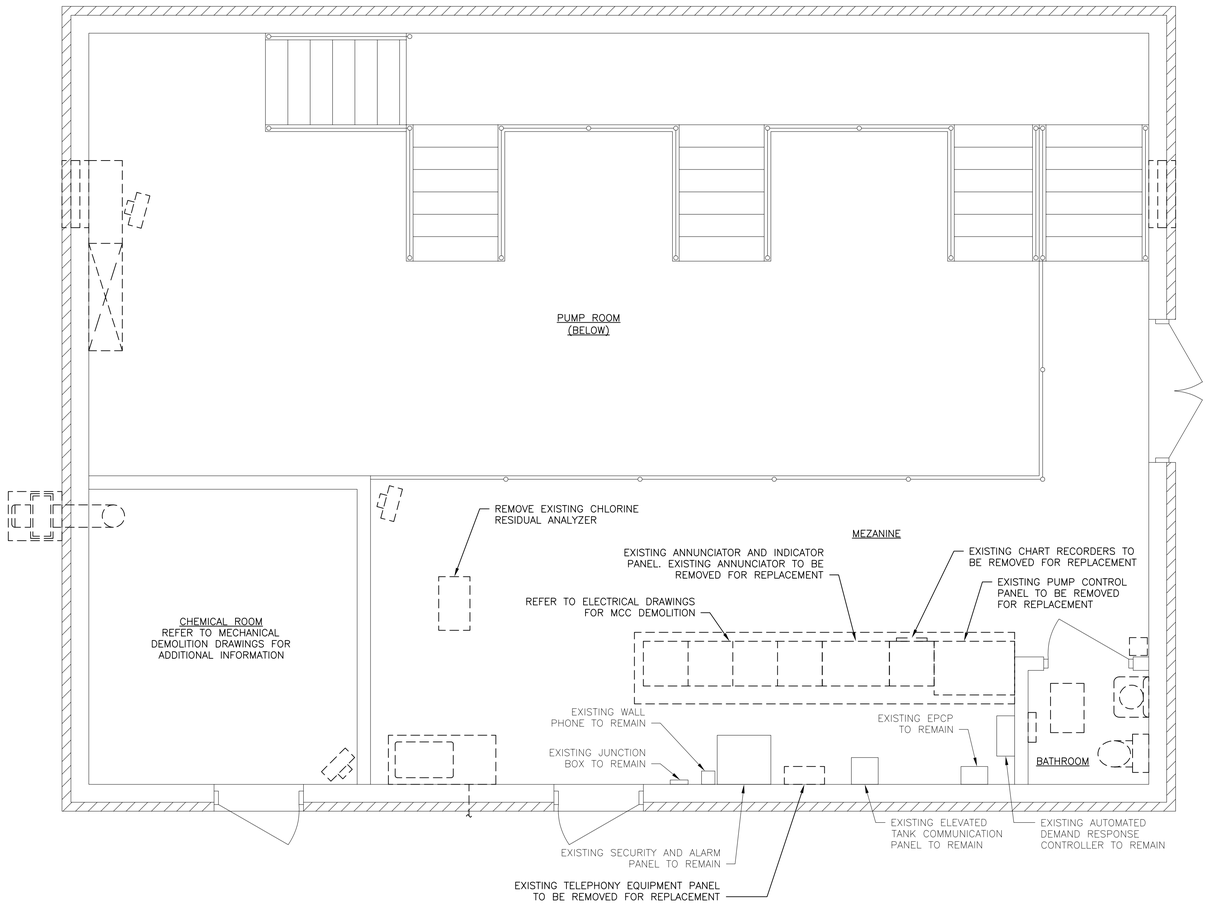

PUMPING STATION – DEMOLITION PLAN AT EL 463.50

SCALE: 3/8" = 1'-0"

CITY OF BALTIMORE	REVISION – CITY OF BALTIMORE
CHIEF, OFFICE OF ENGINEERING AND CONSTRUCTION DATE	CHIEF, FACILITIES ENGINEERING SECTION DATE

SEAL: STATE OF MARYLAND CHAPPOWS ASSAWAKARINI No. 31555 PROFESSIONAL ENGINEER

DATE : 9/17/2020

PROFESSIONAL CERTIFICATION

I HEREBY CERTIFY THAT THESE DOCUMENTS WERE PREPARED OR APPROVED BY ME, AND THAT I AM A DULY LICENSED PROFESSIONAL ENGINEER UNDER THE LAWS OF THE STATE OF MARYLAND.

LICENSE NO. 31555, EXPIRATION DATE 03/15/2021

ENGINEER: JOHNSON, MIRMIRAN & THOMPSON
40 WIGHT AVENUE
HUNT VALLEY, MD 21030

AS-BUILT PER RECORD PRINT

BY:
DATE:

DESIGN BY: DSC
DRAWN BY: GWK
CHKD BY: BCA

REVISION	BY	DATE
CONTRACT COMPLETION BOX		

P.W.A. NO.	KEY SHEET	POSITION SHT
–	V-NE	77 NW 5,6
R.O.W NO.		
–		

DRAWING SCALE	
PLAN SCALE:	AS SHOWN
PROFILE SCALE:	N/A
	N/A

DEPARTMENT OF PUBLIC WORKS

SEE DRAWING 2020-0428 FOR ORIGINAL SIGNATURES

BUREAU OF ENGINEERING AND CONSTRUCTION	HIGHWAYS	STRUCTURES	STORM DRAINS	SEWER	WATER	FIELD ENGINEER	BUR. OF ENGINEERING & CONSTRUCTION

SEE DRAWING 2020-0428 FOR ORIGINAL SIGNATURES

1' 0 1' 2' 3'
SCALE: 3/8"= 1'-0"

CONTRACT COMPLETION BOX

CONTRACTOR:
DATE COMPLETED:
INSPECTOR:
PIPE MATERIAL (Pressure Only)

DWG. FILENAME:

BALTIMORE COUNTY DEPARTMENT OF PUBLIC WORKS BUREAU OF ENGINEERING & CONSTRUCTION

SPARKS PUMPING STATION

PUMPING STATION – INSTRUMENTATION DEMOLITION PLAN

SPARKS WATER PUMPING STATION AND ELEVATED WATER STORAGE TANK IMPROVEMENTS

SUBDIVISION: SPARKS, MD ELECTION DIST. NO.: 8C3

SHEET DESIGNATION	CONTRACT NUMBER
I-5	20094WXO
	JOB ORDER NUMBER
	231-203-0035-0514
	SHEET 48 OF 71
	DRAWING NUMBER
	2020-0475
	FILE NO.:

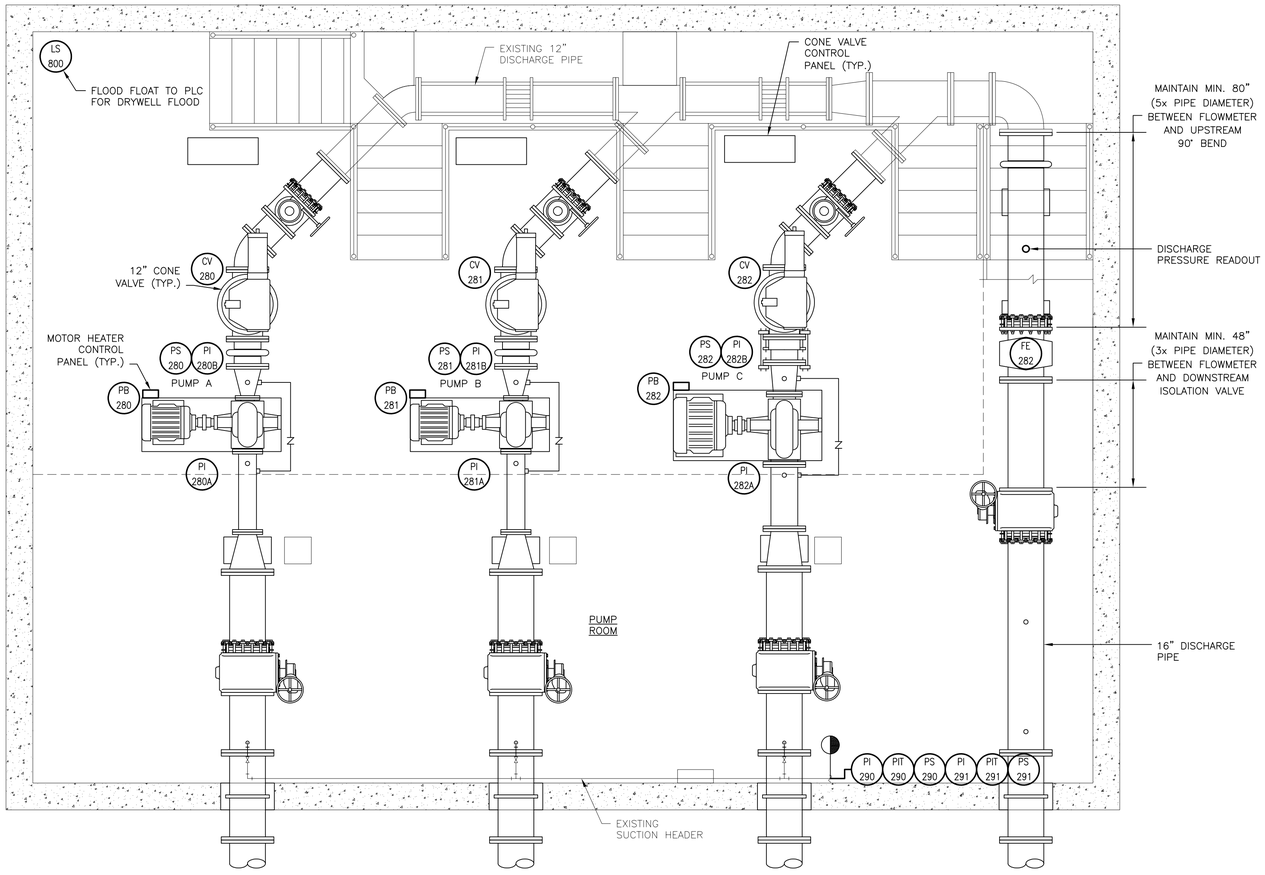

PUMPING STATION – NEW WORK PLAN AT EL 463.50

SCALE: 3/8" = 1'-0"

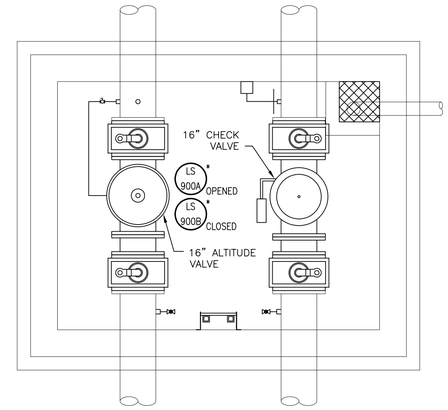

* NOTE: SEE DRAWING C-4 FOR LOCATION OF EXISTING PLC CABINET WHERE ALTITUDE VALVE LIMIT SWITCHES ARE TO BE TERMINATED AND CONFIGURED.

ELEVATED TANK VALVE VAULT TOP SLAB – NEW WORK PLAN

SCALE: 3/8" = 1'-0"

GENERAL SHEET NOTES:

1. ALL PIPING SUPPORTS AND ACCESS STAIRS HAVE NOT BEEN SHOWN ON THE DRAWING FOR CLARITY. SEE STRUCTURAL DRAWINGS FOR DETAILS.
2. CLEAN, PREP, AND RE-PAINT ALL EXISTING PIPING, VALVES, PUMPS, AND FITTINGS.
3. WORK SHALL BE DONE IN ACCORDANCE WITH APPROVED SEQUENCE OF CONSTRUCTION TO MINIMIZE IMPACT TO STATION OPERATIONS.

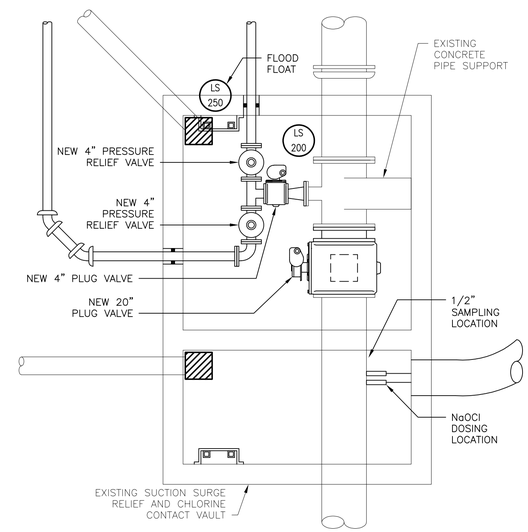

SUCTION SURGE RELIEF AND CHLORINE CONTACT VAULT – NEW WORK PLAN

SCALE: 3/8" = 1'-0"

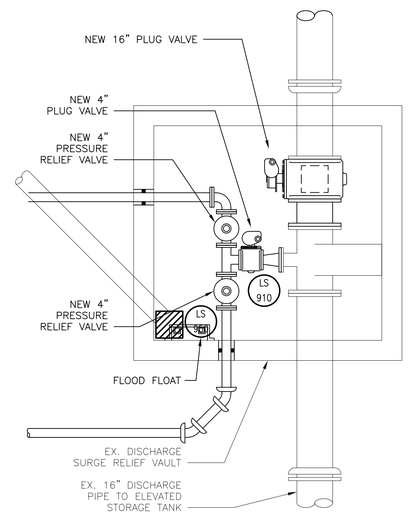

DISCHARGE SURGE RELIEF VAULT – NEW WORK PLAN

SCALE: 3/8" = 1'-0"

CITY OF BALTIMORE	REVISION – CITY OF BALTIMORE
CHIEF, OFFICE OF ENGINEERING AND CONSTRUCTION — DATE	CHIEF, FACILITIES ENGINEERING SECTION — DATE

SEAL: STATE OF MARYLAND — CHRISTOPHER B. MCCARTHY — No. 31555 — PROFESSIONAL ENGINEER

DATE: 9/17/2020

PROFESSIONAL CERTIFICATION

I HEREBY CERTIFY THAT THESE DOCUMENTS WERE PREPARED OR APPROVED BY ME, AND THAT I AM A DULY LICENSED PROFESSIONAL ENGINEER UNDER THE LAWS OF THE STATE OF MARYLAND.

LICENSE NO. 31555, EXPIRATION DATE 03/15/2021

ENGINEER: JOHNSON, MIRMIRAN & THOMPSON
40 WIGHT AVENUE
HUNT VALLEY, MD 21030

AS-BUILT PER RECORD PRINT
BY:
DATE:

DESIGN BY: DSC
DRAWN BY: GWK
CHKD BY: BCA

REVISION	BY	DATE
CONTRACT COMPLETION BOX		

P.W.A. NO.	KEY SHEET	POSITION SHT
–	V-NE DD-SE	77 NW 5,6 82 NW 5,6
R.O.W NO.		
–		

DRAWING SCALE	
PLAN SCALE:	AS SHOWN
PROFILE SCALE:	N/A
	N/A

DEPARTMENT OF PUBLIC WORKS: SEE DRAWING 2020-0428 FOR ORIGINAL SIGNATURES

BUREAU OF ENGINEERING AND CONSTRUCTION	HIGHWAYS	STRUCTURES	STORM DRAINS	SEWER	WATER	FIELD ENGINEER	BUR. OF ENGINEERING & CONSTRUCTION
SEE DRAWING 2020-0428 FOR ORIGINAL SIGNATURES							

BALTIMORE COUNTY DEPARTMENT OF PUBLIC WORKS BUREAU OF ENGINEERING & CONSTRUCTION

SPARKS PUMPING STATION

PUMPING STATION AND TANK VALVE VAULT – INSTRUMENTATION NEW WORK PLAN

SPARKS WATER PUMPING STATION AND ELEVATED WATER STORAGE TANK IMPROVEMENTS

SUBDIVISION: SPARKS, MD ELECTION DIST. NO.: 8C3

CONTRACT COMPLETION BOX
CONTRACTOR:
DATE COMPLETED:
INSPECTOR:
PIPE MATERIAL (Pressure Only)

DWG. FILENAME:

1' 0 1' 2' 3'
SCALE: 3/8"= 1'-0"

SHEET DESIGNATION	CONTRACT NUMBER
I-6	20094WXO

BALTIMORE COUNTY MARYLAND

JOB ORDER NUMBER
231-203-0035-0514
SHEET 49 OF 71
DRAWING NUMBER
2020-0476
FILE NO.:

GENERAL SHEET NOTES:

1. ALL PIPING SUPPORTS AND ACCESS STAIRS HAVE NOT BEEN SHOWN ON THE DRAWING FOR CLARITY. SEE STRUCTURAL DRAWINGS FOR DETAILS.
2. CLEAN, PREP, AND RE-PAINT ALL EXISTING PIPING, VALVES, PUMPS, AND FITTINGS.
3. WORK SHALL BE DONE IN ACCORDANCE WITH APPROVED SEQUENCE OF CONSTRUCTION TO MINIMIZE IMPACT TO STATION OPERATIONS.

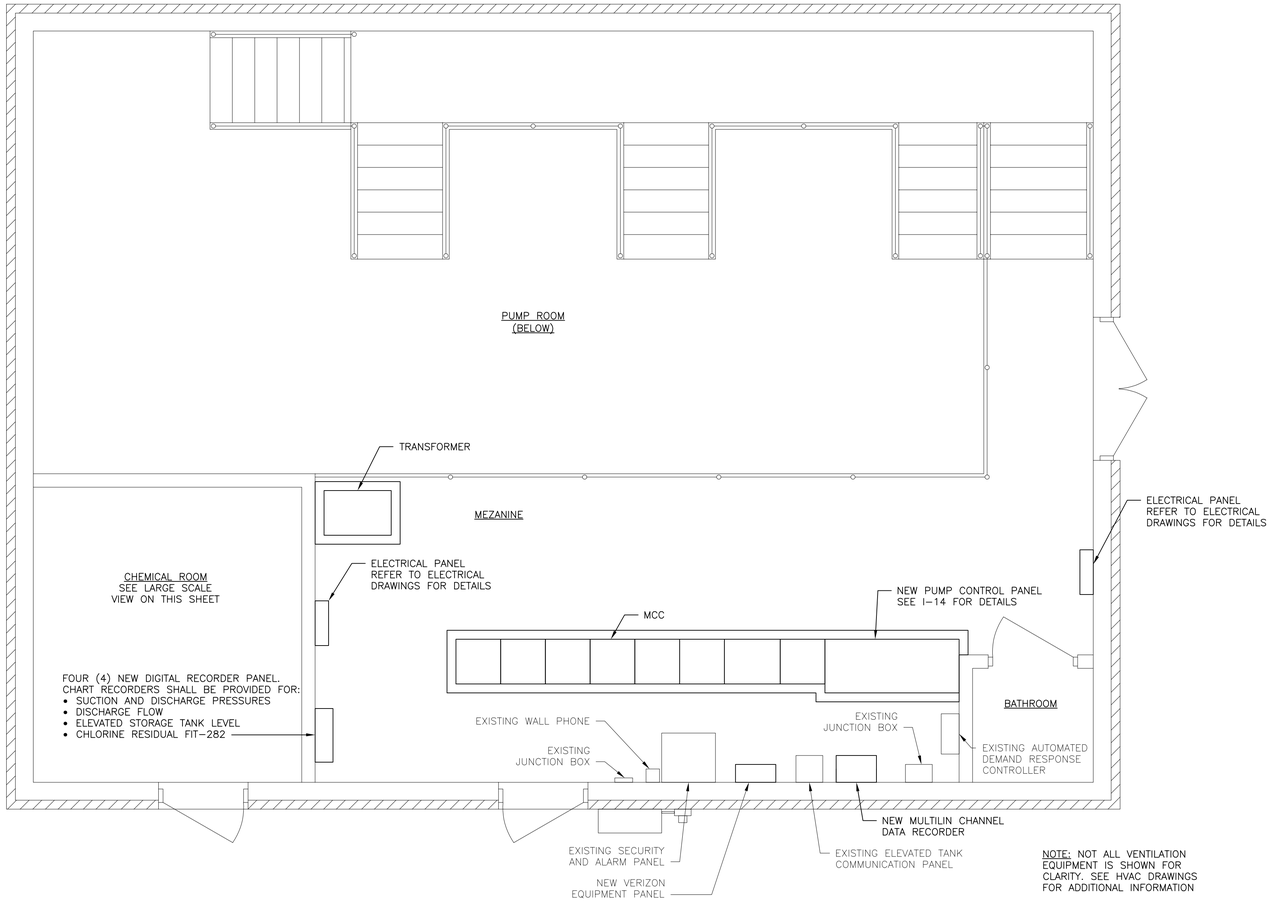

NOTE: NOT ALL VENTILATION EQUIPMENT IS SHOWN FOR CLARITY. SEE HVAC DRAWINGS FOR ADDITIONAL INFORMATION

PUMPING STATION – NEW WORK PLAN AT EL 473.50

SCALE: 3/8" = 1'-0"

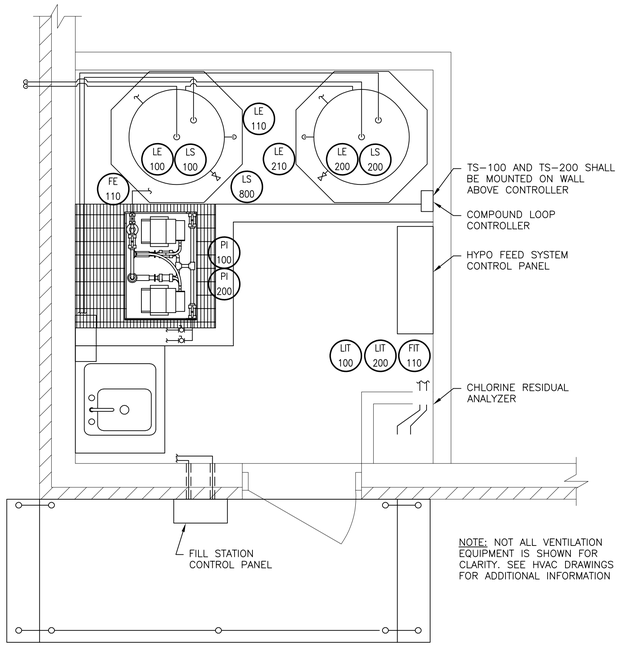

NOTE: NOT ALL VENTILATION EQUIPMENT IS SHOWN FOR CLARITY. SEE HVAC DRAWINGS FOR ADDITIONAL INFORMATION

PUMPING STATION – CHEMICAL ROOM NEW WORK PLAN AT EL. 473.50

SCALE: 1/2" = 1'-0"

CITY OF BALTIMORE	REVISION – CITY OF BALTIMORE
CHIEF, OFFICE OF ENGINEERING AND CONSTRUCTION DATE	CHIEF, FACILITIES ENGINEERING SECTION DATE

SEAL: STATE OF MARYLAND – CHRISTOPHER B. KASHANIAN – No. 31555 – PROFESSIONAL ENGINEER

DATE : 9/17/2020

PROFESSIONAL CERTIFICATION

I HEREBY CERTIFY THAT THESE DOCUMENTS WERE PREPARED OR APPROVED BY ME, AND THAT I AM A DULY LICENSED PROFESSIONAL ENGINEER UNDER THE LAWS OF THE STATE OF MARYLAND.

LICENSE NO. 31555, EXPIRATION DATE 03/15/2021

ENGINEER: JOHNSON, MIRMIRAN & THOMPSON
40 WIGHT AVENUE
HUNT VALLEY, MD 21030

DESIGN BY: DSC
DRAWN BY: GWK
CHKD BY: BCA

AS-BUILT PER RECORD PRINT
BY:
DATE:

REVISION	BY	DATE
CONTRACT COMPLETION BOX		

P.W.A. NO.	KEY SHEET	POSITION SHT
–	V-NE	77 NW 5,6
R.O.W NO.		
–		

DRAWING SCALE	
PLAN SCALE:	AS SHOWN
PROFILE SCALE:	N/A
	N/A

DEPARTMENT OF PUBLIC WORKS: SEE DRAWING 2020-0428 FOR ORIGINAL SIGNATURES

BUREAU OF ENGINEERING AND CONSTRUCTION	HIGHWAYS	STRUCTURES	STORM DRAINS	SEWER	WATER	FIELD ENGINEER	BUR. OF ENGINEERING & CONSTRUCTION
SEE DRAWING 2020-0428 FOR ORIGINAL SIGNATURES							

1' 0 1' 2' 3'
SCALE: 3/8" = 1'-0"

CONTRACT COMPLETION BOX

CONTRACTOR:
DATE COMPLETED:
INSPECTOR:
PIPE MATERIAL (Pressure Only)

DWG. FILENAME:

BALTIMORE COUNTY DEPARTMENT OF PUBLIC WORKS BUREAU OF ENGINEERING & CONSTRUCTION

SPARKS PUMPING STATION

PUMPING STATION – INSTRUMENTATION NEW WORK PLAN

SPARKS WATER PUMPING STATION AND ELEVATED WATER STORAGE TANK IMPROVEMENTS

SUBDIVISION: SPARKS, MD ELECTION DIST. NO.: 8C3

SHEET DESIGNATION	CONTRACT NUMBER
I-7	20094WXO
JOB ORDER NUMBER	
231-203-0035-0514	
SHEET 50 OF 71	
DRAWING NUMBER	
2020-0477	
FILE NO.:	REV. 03/97

BALTIMORE COUNTY MARYLAND

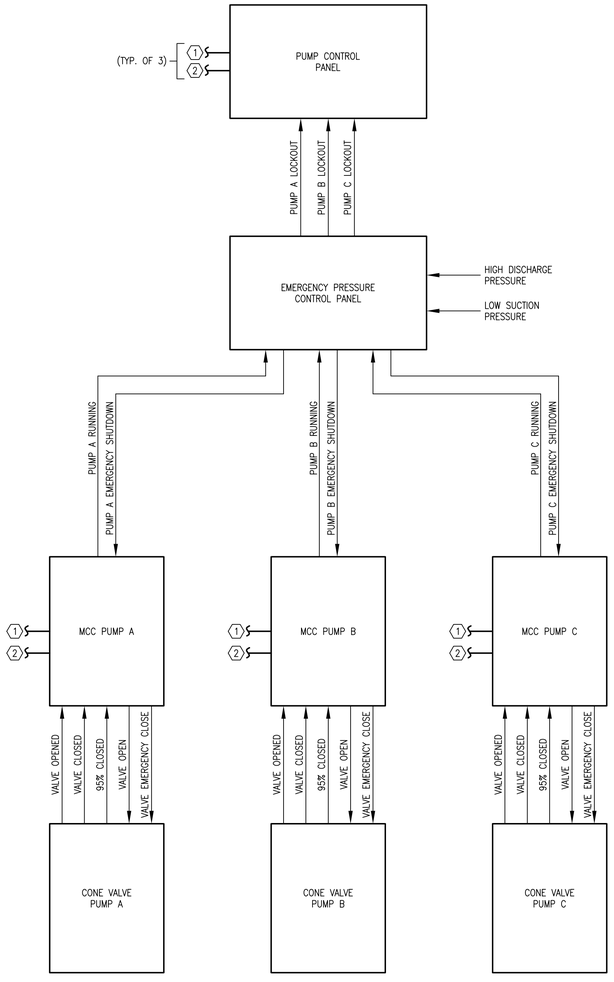

PUMP SYSTEM CONTROL RISER DIAGRAM

SCALE: NOT TO SCALE

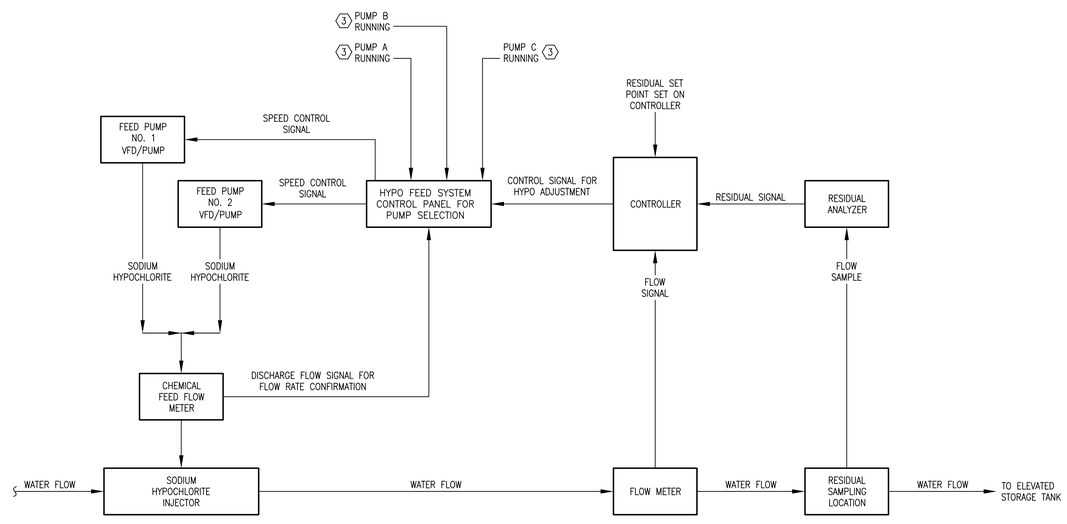

CHLORINATION CONTROL LOOP

SCALE: NOT TO SCALE

GENERAL NOTES:

1. NOT ALL CONTROL SIGNALS ARE SHOWN. THE SCHEMATIC SHOWN ON THIS DRAWING IS INCLUDED TO DETAIL THE GENERAL EQUIPMENT ARRANGEMENT AND INTEROPERABILITY. THE CONTRACTOR IS RESPONSIBLE FOR PROVIDING ALL CONDUIT AND WIRING REQUIRED FOR A COMPLETE AND FULLY–FUNCTIONAL INSTALLATION

SHEET KEYNOTES:

1. PROVIDE THE FOLLOWING I/O COMMUNICATION TO PUMP CONTROL PANEL FOR PUMP OPERATING STATUS:
   - PUMP RUNNING (DI)
   - PUMP START (DO)
   - PUMP STOP (DO)
   - PUMP LOCKOUT (DI)
   - PUMP IN REMOTE (DI) X 2 FOR PLC STATUS AND AUXILIARY CONTROL FUNCTIONALITY
   - PUMP IN LOCAL (DI)
   - PUMP IN VFD (DI)
   - PUMP IN BYPASS (DO)
   - PUMP SPEED CONTROL (AO)
   - PUMP SPEED FEEDBACK (AI)

2. PROVIDE THE FOLLOWING I/O COMMUNICATION TO PUMP CONTROL PANEL FOR PUMP OPERATING STATUS:
   - VALVE CLOSED (DI)
   - VALVE OPENED (DI)

3. PUMP RUNNING SIGNAL FROM NORMALLY OPEN CONTACTS IN ASSOCIATED MCC BUCKET THAT CLOSES WHEN PUMP IS RUNNING AND CONE VALVE IS FULLY OPEN. CHEMICAL PUMPS SHALL BE PROHIBITED FROM STARTING IF NO PUMPS ARE RUNNING AND NO VALVES ARE FULLY OPEN.

CITY OF BALTIMORE	REVISION – CITY OF BALTIMORE
CHIEF, OFFICE OF ENGINEERING AND CONSTRUCTION — DATE	CHIEF, FACILITIES ENGINEERING SECTION — DATE

SEAL: STATE OF MARYLAND — CHRISTOPHER S. WRIGHT — No. 31555 — PROFESSIONAL ENGINEER

DATE : 9/17/2020

PROFESSIONAL CERTIFICATION

I HEREBY CERTIFY THAT THESE DOCUMENTS WERE PREPARED OR APPROVED BY ME, AND THAT I AM A DULY LICENSED PROFESSIONAL ENGINEER UNDER THE LAWS OF THE STATE OF MARYLAND.

LICENSE NO. 31555 EXPIRATION DATE 03/15/2021

ENGINEER: JOHNSON, MIRMIRAN & THOMPSON
40 WIGHT AVENUE
HUNT VALLEY, MD 21030

AS–BUILT PER RECORD PRINT
BY:
DATE:

DESIGN BY: DSC
DRAWN BY: GWK
CHKD BY: BCA

REVISION	BY	DATE
CONTRACT COMPLETION BOX		

P.W.A. NO.	KEY SHEET	POSITION SHT
–	V–NE DD–SE	77 NW 5,6 82 NW 5,6
R.O.W NO.		
–		

DRAWING SCALE	
PLAN SCALE:	AS SHOWN
PROFILE SCALE:	N/A
	N/A

DEPARTMENT OF PUBLIC WORKS

SEE DRAWING 2020–0428 FOR ORIGINAL SIGNATURES

BUREAU OF ENGINEERING AND CONSTRUCTION	HIGHWAYS	STRUCTURES	STORM DRAINS	SEWER	WATER	FIELD ENGINEER	BUR. OF ENGINEERING & CONSTRUCTION
SEE DRAWING 2020–0428 FOR ORIGINAL SIGNATURES							

BALTIMORE COUNTY DEPARTMENT OF PUBLIC WORKS BUREAU OF ENGINEERING & CONSTRUCTION

SPARKS PUMPING STATION

PUMP SYSTEM CONTROL RISER DIAGRAM AND CHLORINATION CONTROL LOOP

SPARKS WATER PUMPING STATION AND ELEVATED WATER STORAGE TANK IMPROVEMENTS

SUBDIVISION: SPARKS, MD ELECTION DIST. NO.: 8C3

CONTRACT COMPLETION BOX

CONTRACTOR:
DATE COMPLETED:
INSPECTOR:
PIPE MATERIAL (Pressure Only)

DWG. FILENAME:

SHEET DESIGNATION	CONTRACT NUMBER
I–8	20094WXO
JOB ORDER NUMBER	231–203–0035–0514
SHEET 51 OF 71	
DRAWING NUMBER	2020–0478
FILE NO.:	REV. 4/2/17

BALTIMORE COUNTY MARYLAND

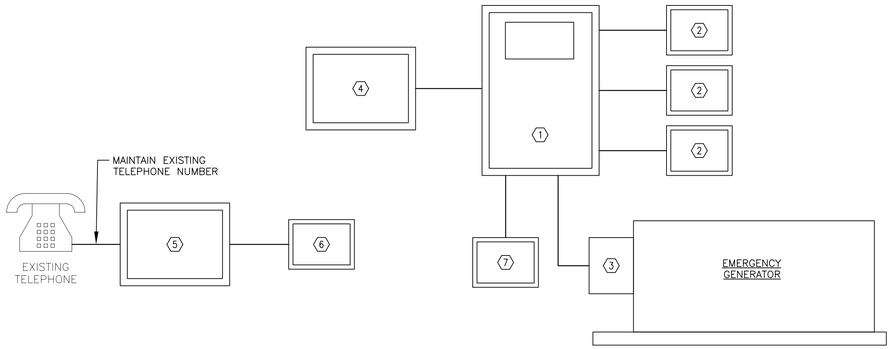

PUMPING STATION – NETWORK RISER DIAGRAM

SCALE: NOT TO SCALE

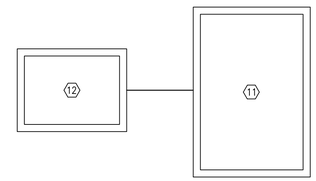

ELEVATED STORAGE TANK – NETWORK RISER DIAGRAM

SCALE: NOT TO SCALE

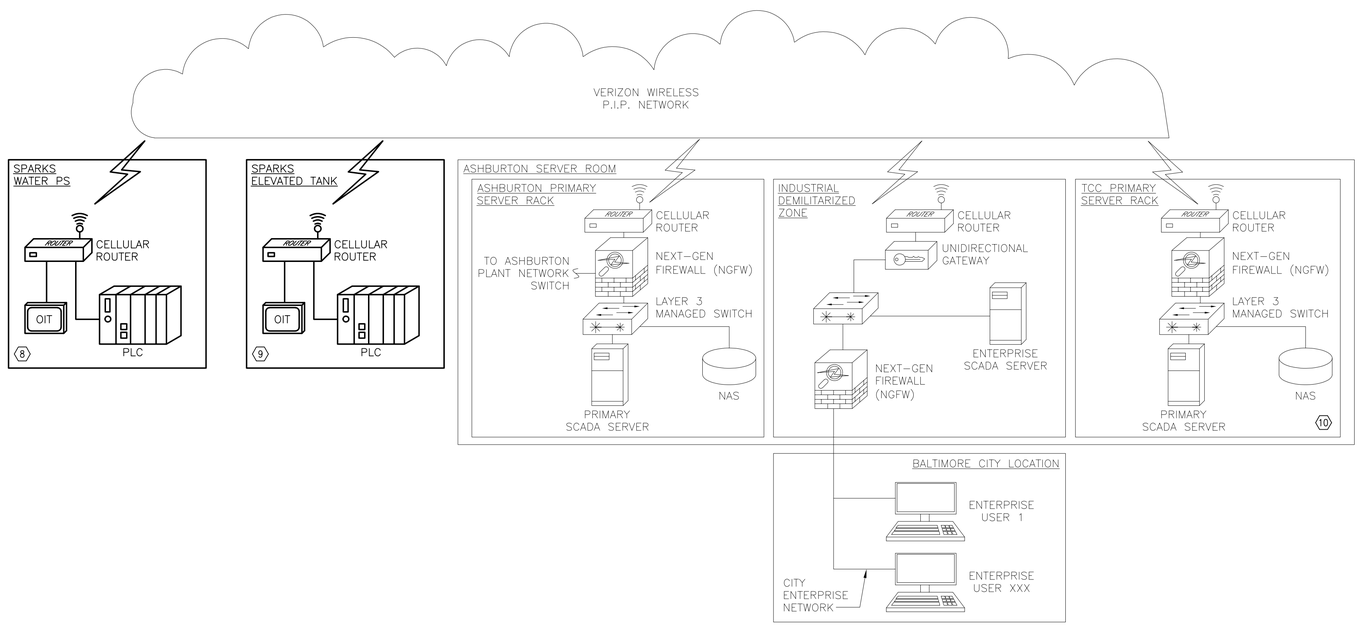

GENERAL NOTES:

1. DRAWING SHOWS A SCHEMATIC OF THE WIRELESS SCADA COMMUNICATION FROM THE SPARKS PS AND SPARKS ELEVATED STORAGE TANK. CONTRACTOR IS RESPONSIBLE FOR COORDINATING WITH CITY OF BALTIMORE MUNICIPAL TELEPHONE EXCHANGE (MTE) AND CITY IT TO INTEGRATE COMMUNICATIONS WITH THE CITY WIRELESS NETWORK. CONTRACTOR IS RESPONSIBLE FOR PROVIDING ALL MATERIALS AND LABOR AT EITHER LOCATION TO ESTABLISH A SUCCESSFUL SCADA COMMUNICATION.
2. CONTRACTOR SHALL PROPERLY PLAN FOR THE WORK AND INCLUDE NECESSARY COORDINATION TIME AND RESPONSE TIME WITH VERIZON AND VERIZON WIRELESS THROUGH THE CITY MTE. IT IS ASSUMED THAT THE CONTRACTOR WILL INCLUDE ADEQUATE TIME IN CONSTRUCTION SCHEDULE TO ACCOMMODATE THE TIME NECESSARY FOR COORDINATION AND DEVELOPMENT OF FINAL DESIGN BY VERIZON. NO ADDITIONAL TIME WILL BE GRANTED FOR IMPROVEMENTS TO THE TELEPHONE AND COMMUNICATION SYSTEMS.

SHEET KEYNOTES:

1. CONTRACTOR TO PROVIDE NEW PUMP CONTROL PANEL AT THE SPARKS PUMPING STATION TO BE EQUIPPED WITH, AS A MINIMUM, LATEST MODICON M580 PLC WITH UNITY HOT STANDBY PROCESSOR, NETWORK CARDS, RIO DROP CARD, STANDBY PLC I/O CARD, STANDARD PLC I/O CARDS, OIT (FACE MOUNTED), ETHERNET SWITCHES FOR NETWORK COMMUNICATIONS, POWER SUPPLY, AND UPS.
2. GE MULTILIN RELAYS, OR APPROVED EQUAL, IN VFD OF EACH PUMP.
3. EMERGENCY GENERATOR AND LOCAL CONTROL PANEL.
4. VERIZON TERMINATION PANEL TO INCLUDE CELLULAR MODEM FOR ESTABLISHING WIRELESS COMMUNICATION WITH THE CITY SCADA. CONTRACTOR TO COORDINATE WITH CITY MTE AND VERIZON FOR REQUIREMENTS OF THE TERMINATION PANEL.
5. CONTRACTOR TO PROVIDE NEW TELEPHONE SERVICE TERMINATION BOARD TO MAINTAIN THE EXISTING TELEPHONE NUMBER AND SERVICE AT THE STATION.
6. EXISTING SECURITY AND SURVEILLANCE DEVICES CONTROL PANEL TO REMAIN. CONTRACTOR TO ESTABLISH NEW CONNECTION TO THE NEW TELEPHONE SERVICE TERMINATION BOARD.
7. STATION POWER MONITORING SYSTEM.
8. CONTRACTOR TO PROVIDE CELLULAR MODEM TO ESTABLISH WIRELESS COMMUNICATION BETWEEN THE PUMP CONTROL PANEL AT THE SPARKS PUMPING STATION TO THE CITY SCADA NETWORK.
9. CONTRACTOR TO PROVIDE CELLULAR MODEM TO ESTABLISH WIRELESS COMMUNICATION BETWEEN THE SPARKS ELEVATED STORAGE TANK TO THE CITY SCADA NETWORK.
10. CONTRACTOR SHALL PROVIDE PROGRAMMING AND NEW HARDWARE/DEVICES AT THE TELEMETRY CONTROL CENTER (TCC) TO INTEGRATE NEW COMMUNICATION LINK FROM THE SPARKS PUMPING STATION AND ELEVATED STORAGE TANK TO TCC.
11. CONTRACTOR TO PROVIDE NEW LOCAL CONTROL PANEL AT THE SPARKS PUMPING STATION TO BE EQUIPPED WITH, AS A MINIMUM, LATEST MODICON M580 PLC PROCESSOR, STANDARD PLC I/O CARDS, OIT (INTERIOR MOUNTED), ETHERNET SWITCHES FOR NETWORK COMMUNICATIONS, POWER SUPPLY, AND UPS.
12. VERIZON TERMINATION PANEL TO INCLUDE CELLULAR MODEM FOR ESTABLISHING WIRELESS COMMUNICATION WITH THE CITY SCADA. CONTRACTOR TO COORDINATE WITH CITY MTE AND VERIZON FOR REQUIREMENTS OF THE TERMINATION PANEL.

CITY OF BALTIMORE	REVISION – CITY OF BALTIMORE
CHIEF, OFFICE OF ENGINEERING AND CONSTRUCTION — DATE	CHIEF, FACILITIES ENGINEERING SECTION — DATE

SEAL: STATE OF MARYLAND — CHARLES B. SHAFFER — No. 31555 — PROFESSIONAL ENGINEER

DATE: 9/17/2020

PROFESSIONAL CERTIFICATION

I HEREBY CERTIFY THAT THESE DOCUMENTS WERE PREPARED OR APPROVED BY ME, AND THAT I AM A DULY LICENSED PROFESSIONAL ENGINEER UNDER THE LAWS OF THE STATE OF MARYLAND.

LICENSE NO. 31555, EXPIRATION DATE 03/15/2021.

ENGINEER: JOHNSON, MIRMIRAN & THOMPSON
40 WIGHT AVENUE
HUNT VALLEY, MD 21030

AS-BUILT PER RECORD PRINT

BY:
DATE:

DESIGN BY: DSC
DRAWN BY: GWK
CHKD BY: BCA

REVISION	BY	DATE
CONTRACT COMPLETION BOX		

P.W.A. NO.	KEY SHEET	POSITION SHT
–	V-NE DD-SE	77 NW 5,6 82 NW 5,6
R.O.W NO.		
–		

DRAWING SCALE	
PLAN SCALE:	AS SHOWN
PROFILE SCALE:	N/A
	N/A

DEPARTMENT OF PUBLIC WORKS

SEE DRAWING 2020-0428 FOR ORIGINAL SIGNATURES

BUREAU OF ENGINEERING AND CONSTRUCTION	HIGHWAYS	STRUCTURES	STORM DRAINS	SEWER	WATER	FIELD ENGINEER	BUR. OF ENGINEERING & CONSTRUCTION
SEE DRAWING 2020-0428 FOR ORIGINAL SIGNATURES							

BALTIMORE COUNTY DEPARTMENT OF PUBLIC WORKS BUREAU OF ENGINEERING & CONSTRUCTION

SPARKS PUMPING STATION

STATION CONTROLS AND NETWORK ARCHITECTURE

SPARKS WATER PUMPING STATION AND ELEVATED WATER STORAGE TANK IMPROVEMENTS

SUBDIVISION: SPARKS, MD ELECTION DIST. NO.: 8C3

CONTRACT COMPLETION BOX

CONTRACTOR:
DATE COMPLETED:
INSPECTOR:
PIPE MATERIAL (Pressure Only)

DWG. FILENAME:

SHEET DESIGNATION	CONTRACT NUMBER
I-9	20094WXO

BALTIMORE COUNTY MARYLAND

JOB ORDER NUMBER
231-203-0035-0514
SHEET 52 OF 71
DRAWING NUMBER
2020-0479
FILE NO.:

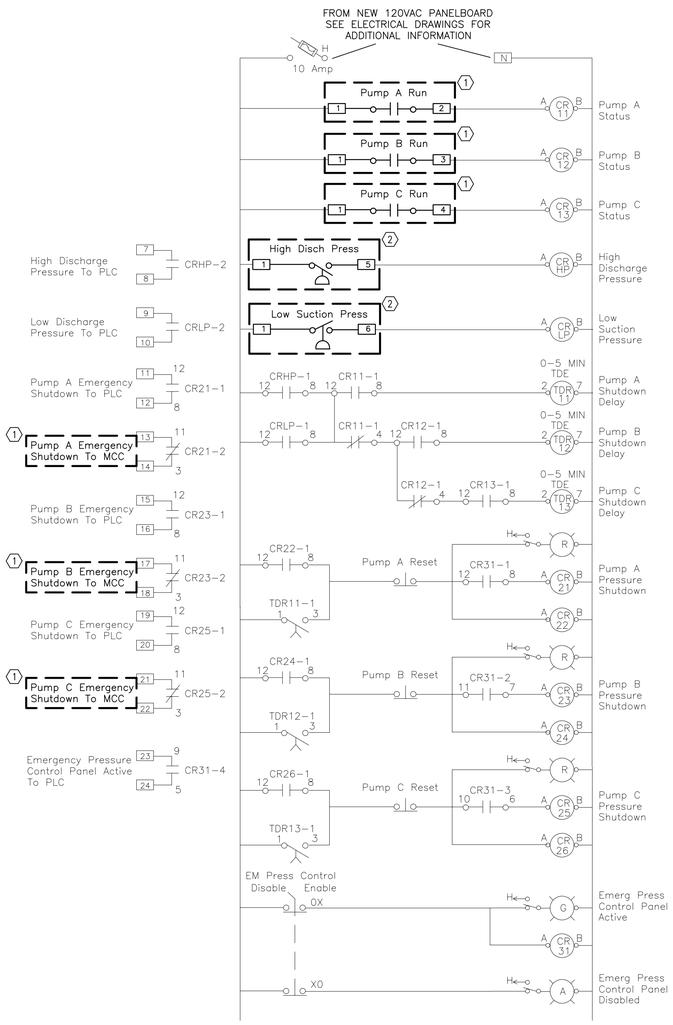

PUMPING STATION – EMERGENCY PRESSURE PANEL WIRING DIAGRAM

SCALE: NOT TO SCALE

GENERAL NOTES:

1. DRAWING IS REPRODUCED FROM AS-BUILT DRAWINGS FROM A PREVIOUS CONTRACT AND PROVIDED FOR REFERENCE AND DESIGN INTENT. THE CONTRACTOR AND SYSTEM INTEGRATOR ARE RESPONSIBLE FOR FIELD VERIFYING THE ACCURACY OF THE INFORMATION TO ENSURE ADEQUACY OF THE CONTROL DIAGRAM.
2. DRAWING IS INTENDED TO SHOW THE EXISTING CONNECTING TERMINALS WITHIN THE EXISTING EMERGENCY PRESSURE PANEL AT SPARKS WATER PS. THE CONTRACTOR AND SYSTEM INTEGRATOR ARE RESPONSIBLE FOR PROVIDING NEW RELAYS, WIRES, AND CONDUITS TO CONNECT THE NEW EQUIPMENT TO THE EXISTING PANEL TO PROVIDE THE OPERATION FUNCTIONALITY AS SHOWN AND DESCRIBED IN THE CONTRACT DOCUMENTS.

SHEET KEYNOTES:

1. PROVIDE CONDUIT AND WIRES AND INTEGRATE PUMP RUNNING STATUSES AND EMERGENCY PRESSURE SHUTDOWN TO NEW MCC.
2. PROVIDE NEW CONDUIT AND WIRES AND INTEGRATE LOW SUCTION AND HIGH DISCHARGE PRESSURE SWITCHES.

CITY OF BALTIMORE	REVISION – CITY OF BALTIMORE
CHIEF, OFFICE OF ENGINEERING AND CONSTRUCTION — DATE	CHIEF, FACILITIES ENGINEERING SECTION — DATE

SEAL: STATE OF MARYLAND — GARRETT S. SHAWVER — No. 31555 — PROFESSIONAL ENGINEER

DATE : 9/17/2020

PROFESSIONAL CERTIFICATION

I HEREBY CERTIFY THAT THESE DOCUMENTS WERE PREPARED OR APPROVED BY ME, AND THAT I AM A DULY LICENSED PROFESSIONAL ENGINEER UNDER THE LAWS OF THE STATE OF MARYLAND.

LICENSE NO. 31555, EXPIRATION DATE 03/15/2021

ENGINEER: JOHNSON, MIRMIRAN & THOMPSON
40 WIGHT AVENUE
HUNT VALLEY, MD 21030

AS-BUILT PER RECORD PRINT

BY:
DATE:

DESIGN BY: DSC
DRAWN BY: GWK
CHKD BY: BCA

REVISION	BY	DATE
CONTRACT COMPLETION BOX		

P.W.A. NO.	KEY SHEET	POSITION SHT
–	V-NE	77 NW 5,6
R.O.W NO.		
–		

DRAWING SCALE	
PLAN SCALE:	AS SHOWN
	N/A
PROFILE SCALE:	N/A

DEPARTMENT OF PUBLIC WORKS

SEE DRAWING 2020-0428 FOR ORIGINAL SIGNATURES

BUREAU OF ENGINEERING AND CONSTRUCTION	HIGHWAYS	STRUCTURES	STORM DRAINS	SEWER	WATER	FIELD ENGINEER	BUR. OF ENGINEERING & CONSTRUCTION
SEE DRAWING 2020-0428 FOR ORIGINAL SIGNATURES							

BALTIMORE COUNTY DEPARTMENT OF PUBLIC WORKS BUREAU OF ENGINEERING & CONSTRUCTION

SPARKS PUMPING STATION

EXISTING EMERGENCY PRESSURE CONTROL PANEL WIRING DIAGRAM

SPARKS WATER PUMPING STATION AND ELEVATED WATER STORAGE TANK IMPROVEMENTS

SUBDIVISION: SPARKS, MD ELECTION DIST. NO.: 8C3

CONTRACT COMPLETION BOX

CONTRACTOR:
DATE COMPLETED:
INSPECTOR:
PIPE MATERIAL (Pressure Only)

DWG. FILENAME:

SHEET DESIGNATION	CONTRACT NUMBER
I-10	20094WXO
JOB ORDER NUMBER	
231-203-0035-0514	
SHEET 53 OF 71	
DRAWING NUMBER	
2020-0480	
FILE NO.:	REV. 8/17/7

BALTIMORE COUNTY MARYLAND

GENERAL NOTES:

1. THE DRAWING IS INTENDED TO SHOW THE NECESSARY PUMP, VFD, RVSS, AND CONE VALVE CONTROL LOGIC AND IS NOT INTENDED TO REPRESENT ALL REQUIRED WIRING, RELAYS, AND OTHER DEVICES NEEDED FOR FULL INTEGRATION OF THE SPECIFIED VARIABLE FREQUENCY DRIVES AND SOFT STARTERS TO BE PROVIDED. THE CONTRACTOR AND SYSTEM INTEGRATOR ARE SOLELY RESPONSIBLE FOR FABRICATING THE CONTROL SYSTEMS INTEGRATING THE NEW PUMPS AND ASSOCIATED EQUIPMENT WITH THE EXISTING PLC PANEL AND EXISTING EMERGENCY PRESSURE CONTROL PANEL TO MEET THE DESIGN INTENT OF THE CONTRACT DOCUMENTS. REFER TO SPECIFICATIONS FOR SUBMISSION REQUIREMENTS FOR REVIEW AND APPROVAL.
2. REFER TO DRAWING I-8 FOR THE PUMP CONTROL SYSTEM RISER DIAGRAM.
3. PROVIDE 4 DPDT SPARE RELAYS AND 25% SPARE TERMINAL BLOCKS IN ADDITION TO ALL COMPONENTS SHOWN BELOW AND REQUIRED FOR COMPLETE OPERATION.
4. THIS DRAWING IS NOT INTENDED TO REPRESENT ALL REQUIRED COMPONENTS BUT IS INTENDED TO SUPPLIMENT THE INFORMATION PRESENTED ELSEWHERE WITHIN THE CONTRACT DOCUMENTS, INCLUDING, BUT NOT LIMITED TO THE PROCESS CONTROL DISCRIPTIONS AND P&IDs.
5. REFER TO SHEET I-2 FOR THE NECESSARY SWITCHES, INDICATING LIGHTS, AND PANEL MOUNTED DEVICES.

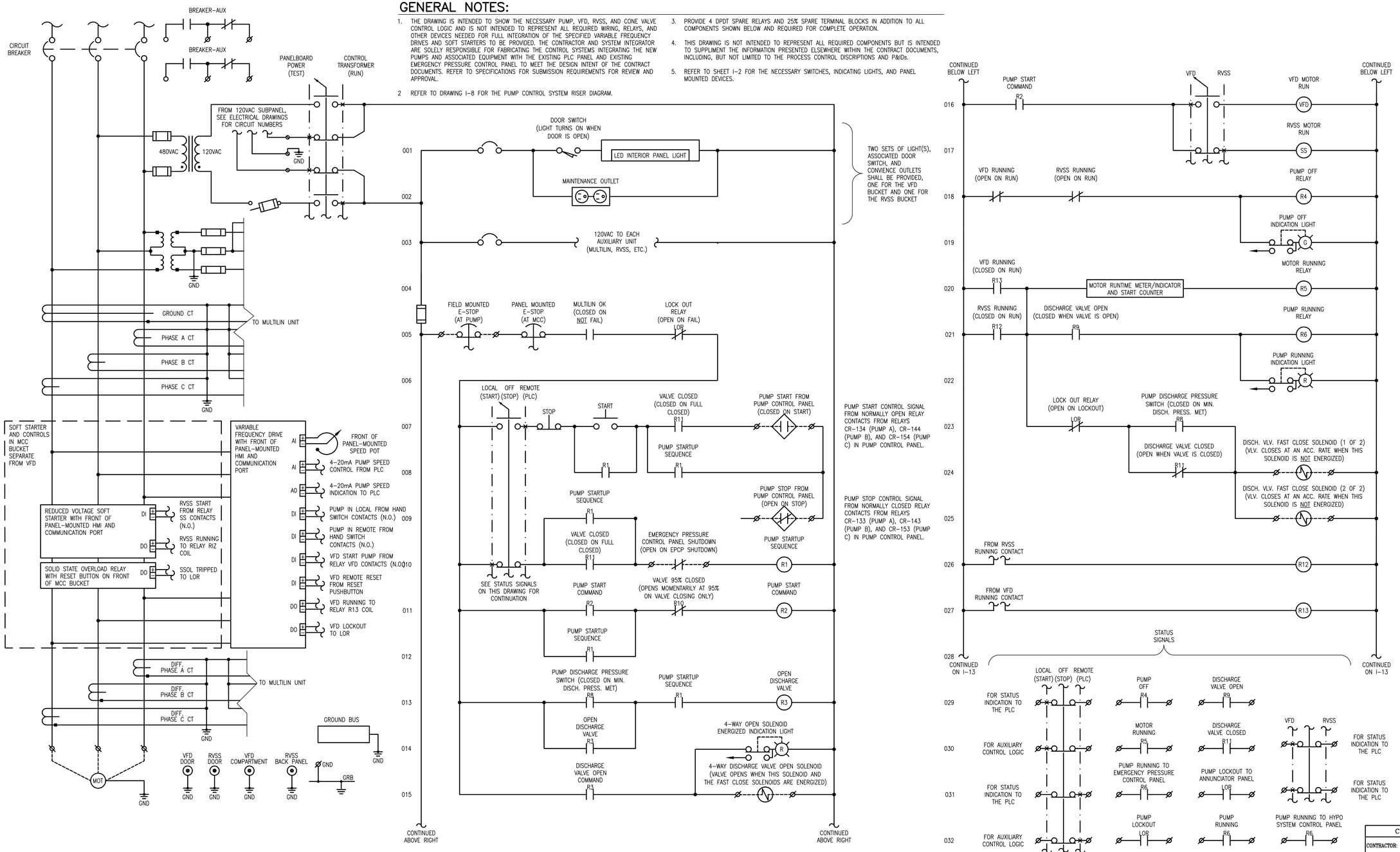

CITY OF BALTIMORE	REVISION – CITY OF BALTIMORE
CHIEF, OFFICE OF ENGINEERING AND CONSTRUCTION DATE	CHIEF, FACILITIES ENGINEERING SECTION DATE

CONTRACT COMPLETION BOX

CONTRACTOR: _____

DATE COMPLETED: _____

INSPECTOR: _____

PIPE MATERIAL (Pressure Only) _____

DWG. FILENAME:

SEAL: STATE OF MARYLAND — CHRISTOPHER W. KNIGHT — No. 31555 — PROFESSIONAL ENGINEER

DATE: 9/17/2020

PROFESSIONAL CERTIFICATION

I HEREBY CERTIFY THAT THESE DOCUMENTS WERE PREPARED OR APPROVED BY ME, AND THAT I AM A DULY LICENSED PROFESSIONAL ENGINEER UNDER THE LAWS OF THE STATE OF MARYLAND.

LICENSE NO. 31555, EXPIRATION DATE 03/15/2021.

ENGINEER: JOHNSON, MIRMIRAN & THOMPSON
40 WIGHT AVENUE
HUNT VALLEY, MD 21030

AS-BUILT PER RECORD PRINT

BY:

DATE:

DESIGN BY: DSC

DRAWN BY: GWK

CHKD BY: BCA

REVISION	BY	DATE
CONTRACT COMPLETION BOX		

P.W.A. NO.	KEY SHEET	POSITION SHT
–		
R.O.W NO.	V-NE	77 NW 5,6
–		

DRAWING SCALE	
PLAN SCALE:	AS SHOWN
PROFILE SCALE:	N/A
	N/A

DEPARTMENT OF PUBLIC WORKS

SEE DRAWING 2020-0428 FOR ORIGINAL SIGNATURES

BUREAU OF ENGINEERING AND CONSTRUCTION	HIGHWAYS	STRUCTURES	STORM DRAINS	SEWER	WATER	FIELD ENGINEER	BUR. OF ENGINEERING & CONSTRUCTION

SEE DRAWING 2020-0428 FOR ORIGINAL SIGNATURES

BALTIMORE COUNTY DEPARTMENT OF PUBLIC WORKS BUREAU OF ENGINEERING & CONSTRUCTION

SPARKS PUMPING STATION

TYPICAL PUMP CONTROL SCHEMATIC

SPARKS WATER PUMPING STATION AND ELEVATED WATER STORAGE TANK IMPROVEMENTS

SUBDIVISION:

SPARKS, MD

ELECTION DIST. NO.: 8C3

SHEET DESIGNATION	CONTRACT NUMBER
I-11	20094WXO

BALTIMORE COUNTY MARYLAND

JOB ORDER NUMBER
231-203-0035-0514
SHEET 54 OF 71
DRAWING NUMBER
2020-0481
FILE NO.:

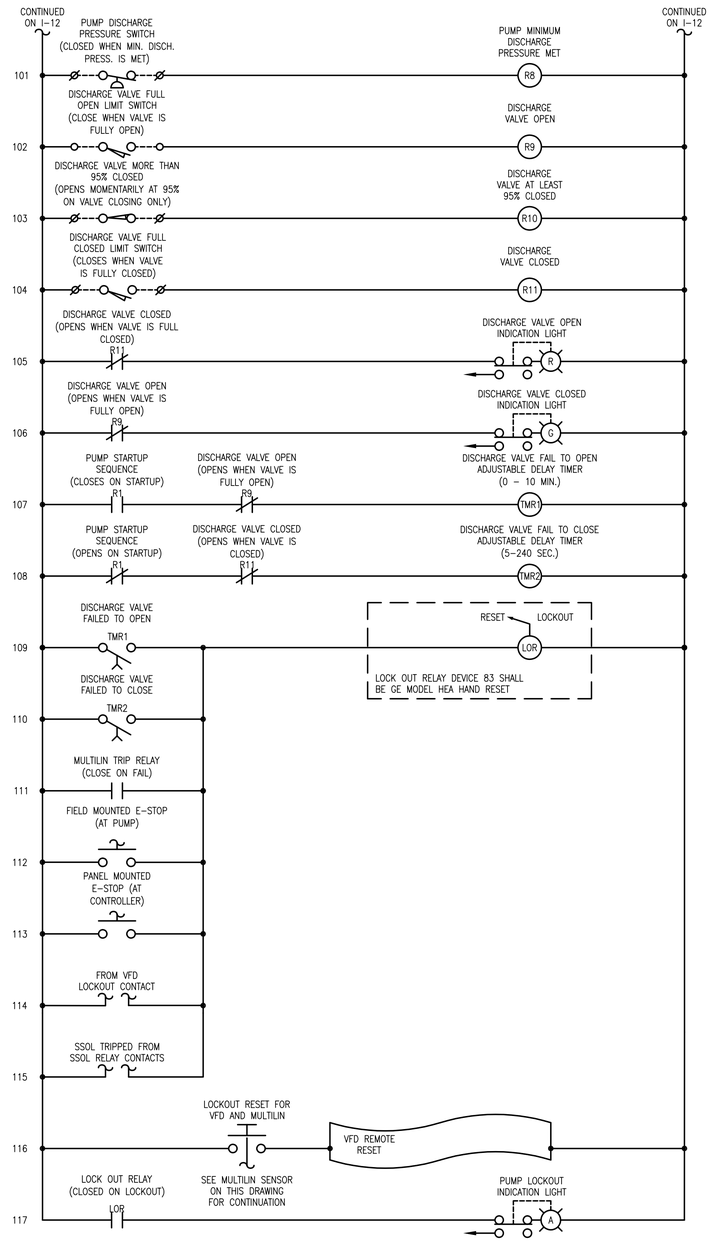

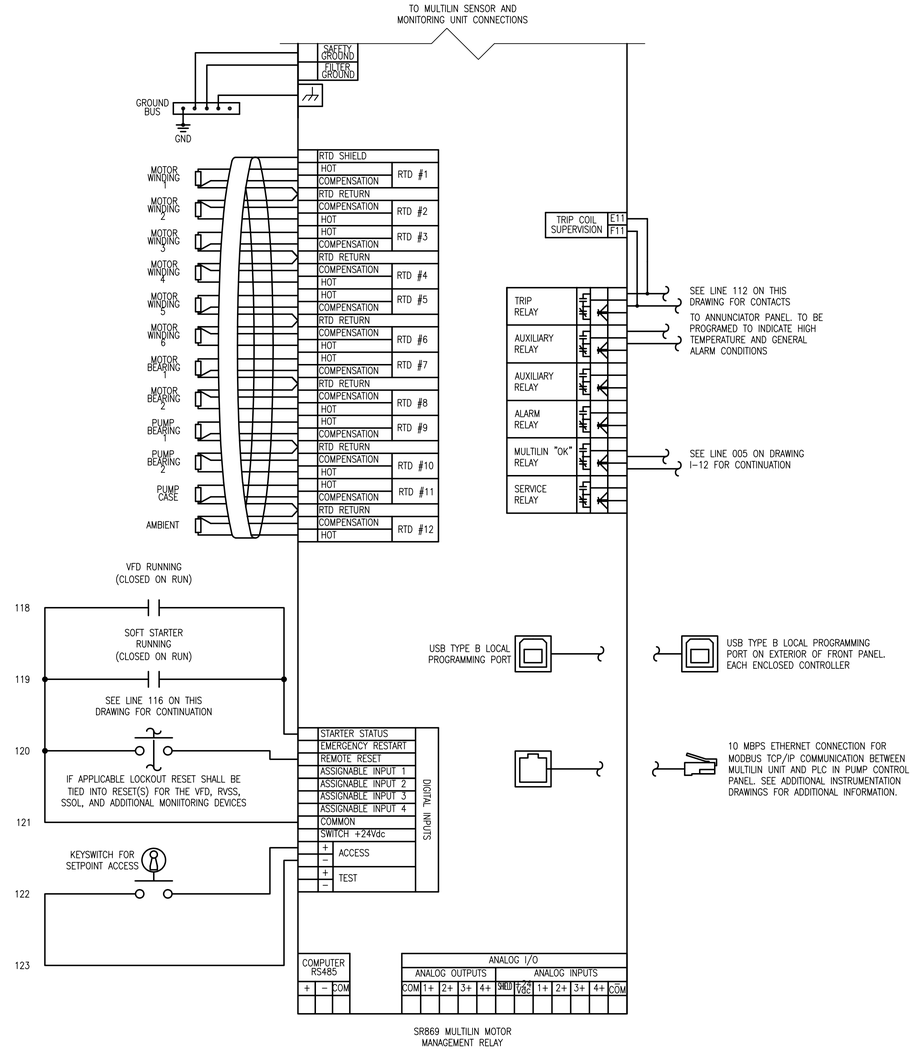

GENERAL NOTES:

1. THE DRAWING IS INTENDED TO SHOW THE NECESSARY PUMP STARTER CONTROL LOGIC AND IS NOT INTENDED TO REPRESENT ALL REQUIRED WIRING AND DEVICES NEEDED FOR FULL INTEGRATION OF THE SPECIFIED VARIABLE FREQUENCY DRIVES AND SOFT STARTERS TO BE PROVIDED. THE CONTRACTOR AND SYSTEM INTEGRATOR ARE SOLELY RESPONSIBLE FOR INTEGRATING THE NEW PUMP STARTERS WITH THE EXISTING PLC PANEL AND EXISTING EMERGENCY PRESSURE CONTROL PANEL TO MEET THE DESIGN INTENT OF THE CONTRACT DOCUMENTS. REFER TO SPECIFICATIONS FOR SUBMISSION REQUIREMENTS FOR REVIEW AND APPROVAL.
2. REFER TO DRAWING I-8 FOR GENERIC PUMP CONTROL SYSTEM RISER DIAGRAM.

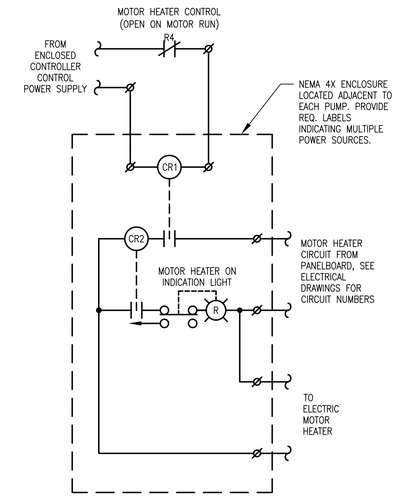

CITY OF BALTIMORE	REVISION – CITY OF BALTIMORE
CHIEF, OFFICE OF ENGINEERING AND CONSTRUCTION — DATE	CHIEF, FACILITIES ENGINEERING SECTION — DATE

SEAL: STATE OF MARYLAND — CHRISTOPHER B. KASHNER — NO. 31555 — PROFESSIONAL ENGINEER

DATE: 9/17/2020

PROFESSIONAL CERTIFICATION

I HEREBY CERTIFY THAT THESE DOCUMENTS WERE PREPARED OR APPROVED BY ME, AND THAT I AM A DULY LICENSED PROFESSIONAL ENGINEER UNDER THE LAWS OF THE STATE OF MARYLAND.

LICENSE NO. 31555, EXPIRATION DATE 03/15/2021

ENGINEER: JOHNSON, MIRMIRAN & THOMPSON
40 WIGHT AVENUE
HUNT VALLEY, MD 21030

AS-BUILT PER RECORD PRINT
BY:
DATE:

DESIGN BY: DSC
DRAWN BY: GWK
CHKD BY: BCA

REVISION	BY	DATE
CONTRACT COMPLETION BOX		

P.W.A. NO.	KEY SHEET	POSITION SHT
–	V-NE	77 NW 5,6
R.O.W NO.		
–		

DRAWING SCALE: PLAN SCALE: AS SHOWN; PROFILE SCALE: N/A; N/A

DEPARTMENT OF PUBLIC WORKS: SEE DRAWING 2020-0428 FOR ORIGINAL SIGNATURES

BUREAU OF ENGINEERING AND CONSTRUCTION	HIGHWAYS	STRUCTURES	STORM DRAINS	SEWER	WATER	FIELD ENGINEER	BUR. OF ENGINEERING & CONSTRUCTION
SEE DRAWING 2020-0428 FOR ORIGINAL SIGNATURES							

BALTIMORE COUNTY DEPARTMENT OF PUBLIC WORKS BUREAU OF ENGINEERING & CONSTRUCTION

SPARKS PUMPING STATION

TYPICAL PUMP CONTROL SCHEMATIC

SPARKS WATER PUMPING STATION AND ELEVATED WATER STORAGE TANK IMPROVEMENTS

SUBDIVISION: SPARKS, MD ELECTION DIST. NO.: 8C3

CONTRACT COMPLETION BOX
CONTRACTOR:
DATE COMPLETED:
INSPECTOR:
PIPE MATERIAL (Pressure Only)

DWG. FILENAME:

SHEET DESIGNATION	CONTRACT NUMBER
I-12	20094WXO

BALTIMORE COUNTY MARYLAND

JOB ORDER NUMBER
231-203-0035-0514
SHEET 55 OF 71
DRAWING NUMBER
2020-0482
FILE NO.:

GENERAL NOTES:

1. ALL INDICATOR LIGHTS TO BE PUSH-TO-TEST LED.

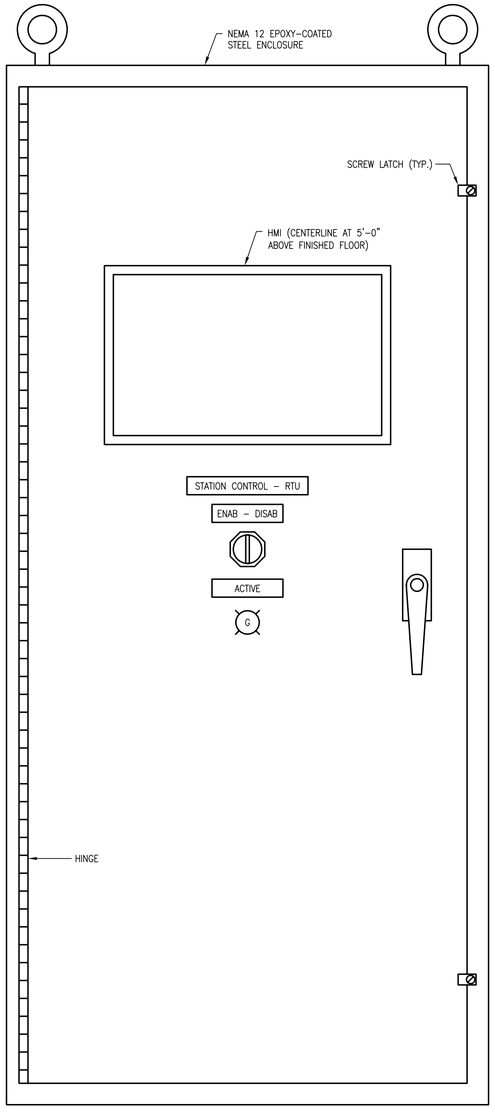

NOTE:

1. PUMP CONTROL PANEL WIDTH SHALL NOT EXCEED 60".

PUMPING STATION CONTROL PANEL ELEVATION

SCALE: NOT TO SCALE

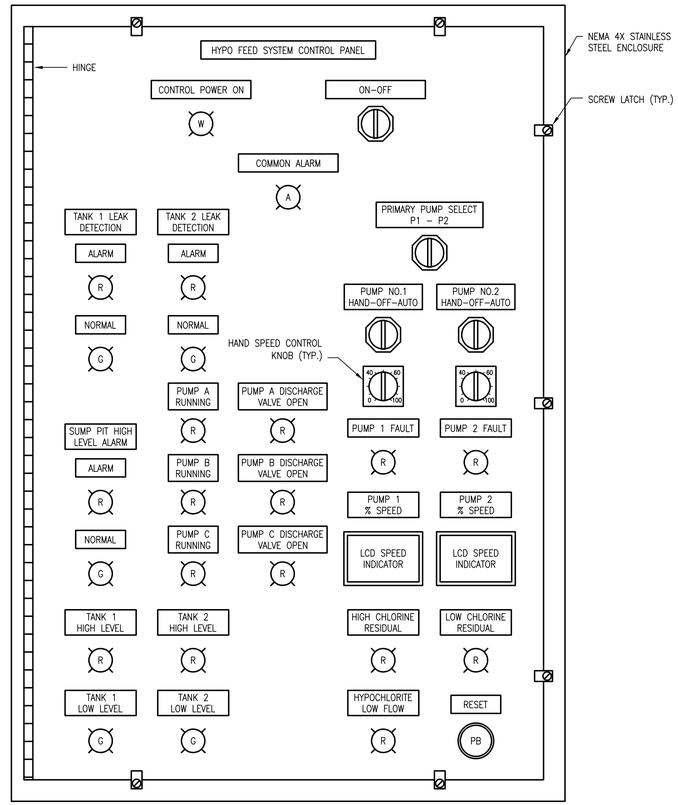

HYPO FEED SYSTEM CONTROL PANEL ELEVATION

SCALE: NOT TO SCALE

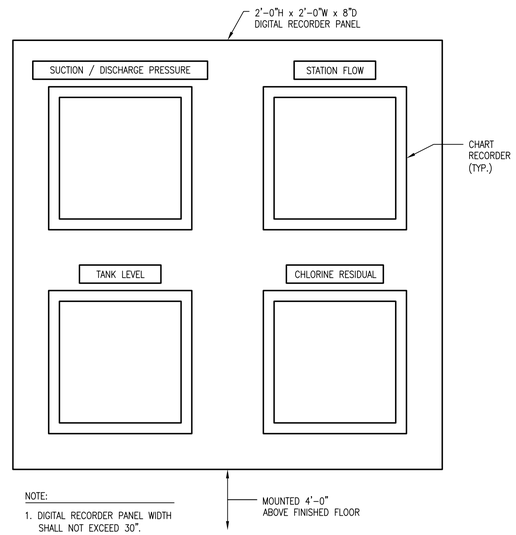

NOTE:

1. DIGITAL RECORDER PANEL WIDTH SHALL NOT EXCEED 30".

DIGITAL RECORDER PANEL ELEVATION

SCALE: NOT TO SCALE

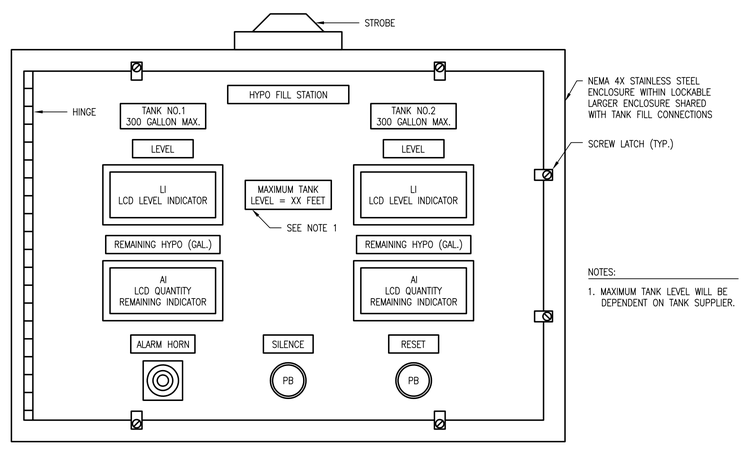

NOTES:

1. MAXIMUM TANK LEVEL WILL BE DEPENDENT ON TANK SUPPLIER.

HYPO FILL STATION PANEL ELEVATION

SCALE: NOT TO SCALE

CITY OF BALTIMORE	REVISION – CITY OF BALTIMORE
CHIEF, OFFICE OF ENGINEERING AND CONSTRUCTION — DATE	CHIEF, FACILITIES ENGINEERING SECTION — DATE

CONTRACT COMPLETION BOX

CONTRACTOR:
DATE COMPLETED:
INSPECTOR:
PIPE MATERIAL (Pressure Only)

DWG. FILENAME:

SEAL: STATE OF MARYLAND — CHRISTOPHER B. JOHNSON — No. 31555 — PROFESSIONAL ENGINEER

DATE : 9/17/2020

PROFESSIONAL CERTIFICATION

I HEREBY CERTIFY THAT THESE DOCUMENTS WERE PREPARED OR APPROVED BY ME, AND THAT I AM A DULY LICENSED PROFESSIONAL ENGINEER UNDER THE LAWS OF THE STATE OF MARYLAND.

LICENSE NO. 31555, EXPIRATION DATE 03/15/2021.

ENGINEER: JOHNSON, MIRMIRAN & THOMPSON
40 WIGHT AVENUE
HUNT VALLEY, MD 21030

AS-BUILT PER RECORD PRINT
BY:
DATE:

DESIGN BY: DSC
DRAWN BY: GWK
CHKD BY: BCA

REVISION	BY	DATE
CONTRACT COMPLETION BOX		

P.W.A. NO.	KEY SHEET	POSITION SHT
–	V-NE	77 NW 5,6
R.O.W NO.		
–		

DRAWING SCALE: PLAN SCALE: AS SHOWN; PROFILE SCALE: N/A; N/A

DEPARTMENT OF PUBLIC WORKS: SEE DRAWING 2020-0428 FOR ORIGINAL SIGNATURES

BUREAU OF ENGINEERING AND CONSTRUCTION	HIGHWAYS	STRUCTURES	STORM DRAINS	SEWER	WATER	FIELD ENGINEER	BUR. OF ENGINEERING & CONSTRUCTION
SEE DRAWING 2020-0428 FOR ORIGINAL SIGNATURES							

BALTIMORE COUNTY DEPARTMENT OF PUBLIC WORKS BUREAU OF ENGINEERING & CONSTRUCTION

SPARKS PUMPING STATION

INSTRUMENTATION DETAILS

SPARKS WATER PUMPING STATION AND ELEVATED WATER STORAGE TANK IMPROVEMENTS

SUBDIVISION: SPARKS, MD ELECTION DIST. NO.: 8C3

BALTIMORE COUNTY MARYLAND

SHEET DESIGNATION	CONTRACT NUMBER
I-13	20094WXO
JOB ORDER NUMBER	231-203-0035-0514
SHEET 56 OF 71	
DRAWING NUMBER	2020-0483
FILE NO.:	REV. 03/17

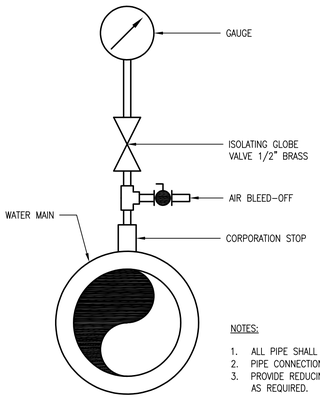

NOTES:

1. ALL PIPE SHALL BE NON-LEAD HARD BRASS 1/2".
2. PIPE CONNECTION SHALL BE MADE BY 1/2" NPT.
3. PROVIDE REDUCING BUSHINGS (NON-LEAD BRASS) AS REQUIRED.

PRESSURE GAUGE CONNECTION – DETAIL

SCALE: NOT TO SCALE

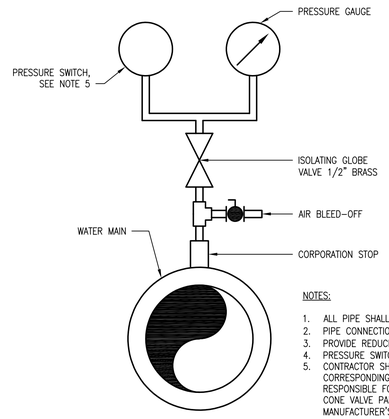

NOTES:

1. ALL PIPE SHALL BE NON-LEAD HARD BRASS 1/2".
2. PIPE CONNECTION SHALL BE MADE BY 1/2" NPT.
3. PROVIDE REDUCING BUSHINGS (NON-LEAD BRASS) AS REQUIRED.
4. PRESSURE SWITCH SHALL BE SET AT 90 PSI.
5. CONTRACTOR SHALL HARD-WIRE THE PRESSURE SWITCH TO THE CORRESPONDING CONE VALVE PANEL. CONTRACTOR SHALL BE RESPONSIBLE FOR INTEGRATING THE PRESSURE SWITCH TO THE CONE VALVE PANEL TO MEET CITY REQUIREMENTS AND CONE VALVE MANUFACTURER'S RECOMMENDATIONS.

PRESSURE SWITCH CONNECTION – DETAIL

SCALE: NOT TO SCALE

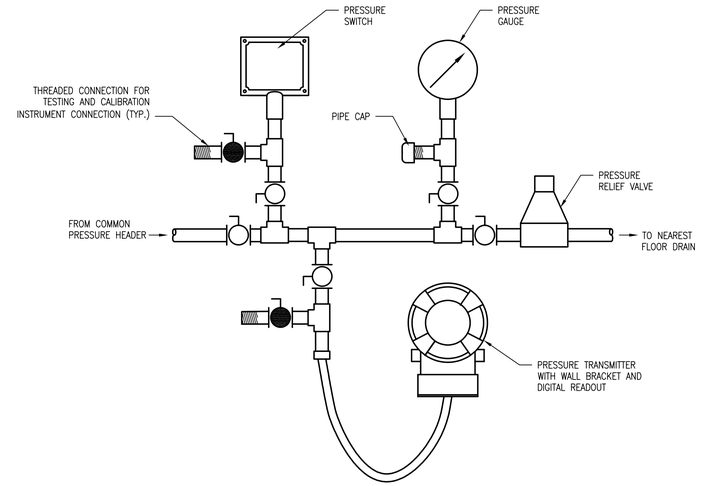

COMMON SUCTION AND DISCHARGE PRESSURE INSTRUMENTS – DETAIL (TYP. OF 2)

SCALE: NOT TO SCALE

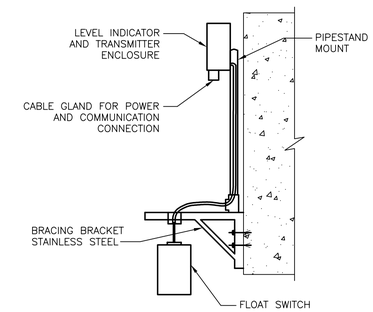

FLOAT SWITCH – DETAIL

SCALE: NOT TO SCALE

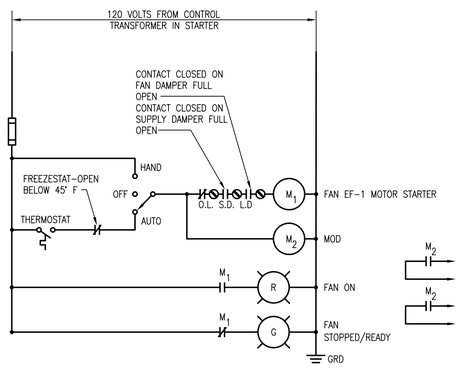

NOTE: ALL PILOT LIGHTS SHALL BE LED ILLUMINATED PUSH TO TEST TYPE.

CONTROL SCHEMATIC – EXHAUST FAN CONTROL PANEL

SCALE: NOT TO SCALE

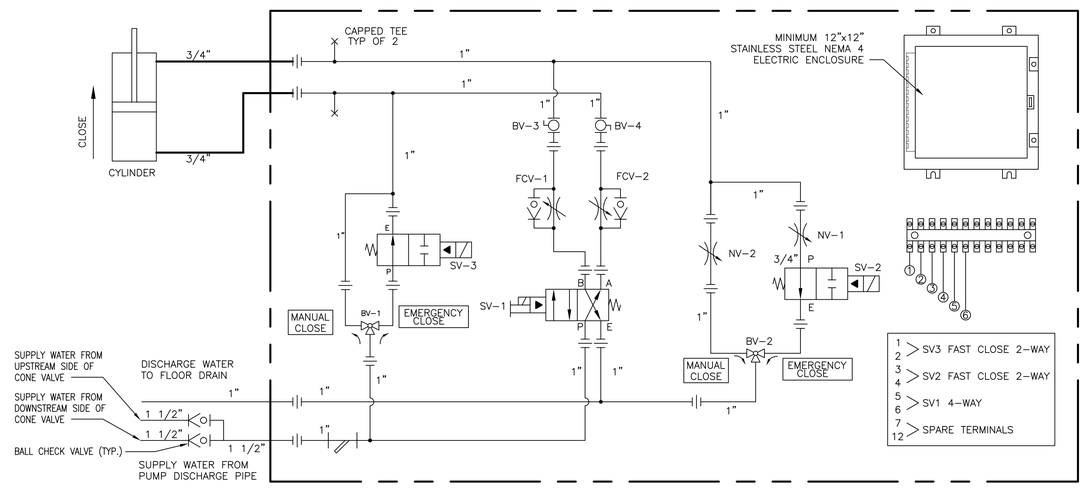

AUTOMATIC OPENING
WITH BV-1,BV-2 IN EMERGENCY CLOSE POSITION.
SV-1, 2, 3 ENERGIZED – ROTOVALVE OPENS AS DETERMINED BY SETTING OF FCV-2. ADJ 30-240 SEC. SHOP SET 90 SEC.

AUTOMATIC CLOSING
WITH BV-1,BV-2 IN EMERGENCY CLOSE POSITION.
SV-1 DE-ENERGIZED, SV-2, 3 ENERGIZED
ROTOVALVE CLOSES AS DETERMINED BY SETTING OF FCV-1.
ADJ 30-240 SEC. SHOP SET 150 SEC.

AUTO EMERGENCY CLOSING
WITH BV-1,BV-2 IN EMERGENCY CLOSE POSITION.
SV-1, 2, 3 DE-ENERGIZED, ROTOVALVE CLOSES
AT A FASTER RATE(DETERMINED BY SETTING OF FCV-1 AND NV-1)
ADJ 30-240 SEC. SHOP SET 75 SEC.

MANUAL EMERGENCY OPERATION
POSITION BV-3 AND BV-4 TO THE CLOSE POSITION
CLOSE BV-3 AND BV-4
POSITION BV-1 & BV-2 TO MANUAL CLOSE POSITION
SPEED CONTROLLED BY SETTING OF NV-2.

NOTES:

1. CONTROL VOLTAGE – 120 VAC
2. TUBING – COPPER TYPE K, SIZES AS SHOWN
3. FITTINGS – SWEAT COPPER FITTINGS
4. MANUAL CLOSE AND EMERGENCY CLOSE TAGS TO BE ENGRAVED LAMINATED PLASTIC, RED LETTERING ON WHITE BACKGROUND.
5. ALL SOLENOID VALVES ARE SHOWN DE-ENERGIZED.
6. ALL CONTROLS TO BE MOUNTED ON MIN.3/4" POLYCARBONATE PANEL BY VALVE MANUFACTURER. PROVIDE SUPPORTS AND MOUNT LEGS AND FASTENER TO PANEL.
7. REFER TO M-10 FOR PANEL LAYOUT AND DIMENSIONS.

ITEMIZED LEGEND:

SV-1	4-WAY SOLENOID VALVE	BV-1	BALL VALVE 3 WAY
SV-2	2-WAY FAST CLOSE SOLENOID VALVE	BV-2	BALL VALVE 3 WAY
SV-3	2-WAY FAST CLOSE SOLENOID VALVE	BV-3	BALL VALVE 2 WAY (N.O.)
FCV-1	CLOSE SPEED CONTROL	BV-4	BALL VALVE 2 WAY (N.O.)
FCV-2	OPEN SPEED CONTROL		
NV-1	EMERGENCY CLOSE SPEED CONTROL- AUTO		
NV-2	EMERGENCY CLOSE SPEED CONTROL- MANUAL		

HYDRAULIC SCHEMATIC

SCALE: NOT TO SCALE

CITY OF BALTIMORE	REVISION – CITY OF BALTIMORE
CHIEF, OFFICE OF ENGINEERING AND CONSTRUCTION — DATE	CHIEF, FACILITIES ENGINEERING SECTION — DATE

SEAL: STATE OF MARYLAND – CHRISTOPHER B. CASTAGNA – No. 31555 – PROFESSIONAL ENGINEER
DATE: 9/17/2020

PROFESSIONAL CERTIFICATION
I HEREBY CERTIFY THAT THESE DOCUMENTS WERE PREPARED OR APPROVED BY ME, AND THAT I AM A DULY LICENSED PROFESSIONAL ENGINEER UNDER THE LAWS OF THE STATE OF MARYLAND.
LICENSE NO. 31555, EXPIRATION DATE 03/15/2021.

ENGINEER: JOHNSON, MIRMIRAN & THOMPSON
40 WIGHT AVENUE
HUNT VALLEY, MD 21030
AS-BUILT PER RECORD PRINT
BY:
DATE:

DESIGN BY: DSC
DRAWN BY: GWK
CHKD BY: BCA

REVISION	BY	DATE
CONTRACT COMPLETION BOX		

P.W.A. NO.	KEY SHEET	POSITION SHT
–	V-NE DD-SE	77 NW 5,6 82 NW 5,6
R.O.W NO.		
–		

DRAWING SCALE	
PLAN SCALE:	AS SHOWN
PROFILE SCALE:	N/A
	N/A

DEPARTMENT OF PUBLIC WORKS
SEE DRAWING 2020-0428 FOR ORIGINAL SIGNATURES

BUREAU OF ENGINEERING AND CONSTRUCTION	HIGHWAYS	STRUCTURES	STORM DRAINS	SEWER	WATER	FIELD ENGINEER	BUR. OF ENGINEERING & CONSTRUCTION
SEE DRAWING 2020-0428 FOR ORIGINAL SIGNATURES							

CONTRACT COMPLETION BOX
CONTRACTOR:
DATE COMPLETED:
INSPECTOR:
PIPE MATERIAL (Pressure Only)
DWG. FILENAME:

BALTIMORE COUNTY DEPARTMENT OF PUBLIC WORKS BUREAU OF ENGINEERING & CONSTRUCTION
SPARKS PUMPING STATION
INSTRUMENTATION DETAILS
SPARKS WATER PUMPING STATION AND ELEVATED WATER STORAGE TANK IMPROVEMENTS
SUBDIVISION: SPARKS, MD ELECTION DIST. NO.: 8C3

SHEET DESIGNATION	CONTRACT NUMBER
I-14	20094WXO
JOB ORDER NUMBER	231-203-0035-0514
SHEET 57 OF 71	
DRAWING NUMBER	2020-0484
FILE NO.:	REV. 02/19

CONDUIT AND WIRING SCHEDULE

FROM	TO	DESCRIPTION	WIRE NO./SIZE	TYPE	CONDUIT / RACEWAY	SIGNAL TYPE	REMARKS	I/O TAG / TERM.
MCC	PCP	PUMP A RUNNING	2 #14	THWN	1.5"	DI	SEE NOTE 8	SPP_MN280
MCC	PCP	PUMP A OFF	2 #14	THWN	-	-	SEE NOTE 8	-
MCC	PCP	PUMP A LOCKOUT	2 #14	THWN	-	DI	SEE NOTE 8	SPP_MF280
MCC	PCP	PUMP A IN VFD	2 #14	THWN	-	DI	SEE NOTE 7	TBD
MCC	PCP	PUMP A IN BYPASS	2 #14	THWN	-	DI	SEE NOTE 7	TBD
PCP	MCC	PUMP A START	2 #14	THWN	-	DO	SEE NOTE 6	VEP_MS730 / CR134 (RELAY-CONTACT)
PCP	MCC	PUMP A STOP	2 #14	THWN	-	DO	SEE NOTE 6	VEP_MD730 / CR133 (RELAY-CONTACT)
MCC	PCP	PUMP A IN REMOTE (PLC STATUS)	2 #14	THWN	-	DI	-	SPP_YC280
MCC	PCP	PUMP A IN REMOTE (AUX. CONTROL)	2 #14	THWN	-	-	SEE NOTE 6	CR131 (RELAY-COIL)
MCC	PCP	PUMP A IN LOCAL (PLC STATUS)	2 #14	THWN	-	DI	-	SPP_YH280
MCC	PCP	PUMP A IN LOCAL (AUX. CONTROL)	2 #14	THWN	-	-	SEE NOTE 6	-
MCC	PCP	PUMP A DISCHARGE VALVE OPENED	2 #14	THWN	-	DI	SEE NOTE 8	SPP_ZH280
MCC	PCP	PUMP A DISCHARGE VALVE CLOSED	2 #14	THWN	-	DI	SEE NOTE 8	SPP_ZL280
PCP	MCC	PUMP A SPEED CONTROL	2 #16	TSP	1"	AO	SEE NOTE 7	TBD
MCC	PCP	PUMP A SPEED FEEDBACK	2 #16	TSP	-	AI	SEE NOTE 7	TBD
DISCH. PRESSURE SWITCH	MCC	PUMP A MINIMUM DISCHARGE PRESSURE MET	2 #14	THWN	3/4"	-	-	-
CONE VALVE	MCC	PUMP A DISCHARGE VALVE OPENED	2 #14	THWN	1"	-	-	-
CONE VALVE	MCC	PUMP A DISCHARGE VALVE CLOSED	2 #14	THWN	-	-	-	-
CONE VALVE	MCC	PUMP A DISCHARGE VALVE 95% CLOSED	2 #14	THWN	-	-	-	-
MCC	CONE VALVE	PUMP A DISCHARGE VALVE OPEN	PER MANUFACTURER	PER MANUFACTURER	PER MANUFACTURER	-	SEE NOTE 9	-
MCC	CONE VALVE	PUMP A DISCHARGE VALVE EMERGENCY CLOSE	PER MANUFACTURER	PER MANUFACTURER	PER MANUFACTURER	-	SEE NOTE 9	-
E-STOP	MCC	PUMP A FIELD E-STOP	2 #14	THWN	3/4"	-	-	-
MCC	PCP	PUMP B RUNNING	2 #14	THWN	1.5"	DI	SEE NOTE 8	SPP_MN281
MCC	PCP	PUMP B OFF	2 #14	THWN	-	-	SEE NOTE 8	-
MCC	PCP	PUMP B LOCKOUT	2 #14	THWN	-	DI	SEE NOTE 8	SPP_MF281
MCC	PCP	PUMP B IN VFD	2 #14	THWN	-	DI	SEE NOTE 7	TBD
MCC	PCP	PUMP B IN BYPASS	2 #14	THWN	-	DI	SEE NOTE 7	TBD
PCP	MCC	PUMP B START	2 #14	THWN	-	DO	SEE NOTE 6	VEP_MS731 / CR144 (RELAY-CONTACT)
PCP	MCC	PUMP B STOP	2 #14	THWN	-	DO	SEE NOTE 6	VEP_MD731 / CR143 (RELAY-CONTACT)
MCC	PCP	PUMP B IN REMOTE (PLC STATUS)	2 #14	THWN	-	DI	-	SPP_YC281
MCC	PCP	PUMP B IN REMOTE (AUX. CONTROL)	2 #14	THWN	-	-	SEE NOTE 6	CR141 (RELAY-COIL)
MCC	PCP	PUMP B IN LOCAL (PLC STATUS)	2 #14	THWN	-	DI	-	SPP_YH281
MCC	PCP	PUMP B IN LOCAL (AUX. CONTROL)	2 #14	THWN	-	-	SEE NOTE 6	-
MCC	PCP	PUMP B DISCHARGE VALVE OPENED	2 #14	THWN	-	DI	SEE NOTE 8	SPP_ZH281
MCC	PCP	PUMP B DISCHARGE VALVE CLOSED	2 #14	THWN	-	DI	SEE NOTE 8	SPP_ZL281
PCP	MCC	PUMP B SPEED CONTROL	2 #16	TSP	1"	AO	SEE NOTE 7	TBD
MCC	PCP	PUMP B SPEED FEEDBACK	2 #16	TSP	-	AI	SEE NOTE 7	TBD
DISCH. PRESSURE SWITCH	MCC	PUMP B MINIMUM DISCHARGE PRESSURE MET	2 #14	THWN	3/4"	-	-	-
CONE VALVE	MCC	PUMP B DISCHARGE VALVE OPENED	2 #14	THWN	1"	-	-	-
CONE VALVE	MCC	PUMP B DISCHARGE VALVE CLOSED	2 #14	THWN	-	-	-	-
CONE VALVE	MCC	PUMP B DISCHARGE VALVE 95% CLOSED	2 #14	THWN	-	-	-	-
MCC	CONE VALVE	PUMP B DISCHARGE VALVE OPEN	PER MANUFACTURER	PER MANUFACTURER	PER MANUFACTURER	-	SEE NOTE 9	-
MCC	CONE VALVE	PUMP B DISCHARGE VALVE EMERGENCY CLOSE	PER MANUFACTURER	PER MANUFACTURER	PER MANUFACTURER	-	SEE NOTE 9	-
E-STOP	MCC	PUMP B FIELD E-STOP	2 #14	THWN	3/4"	-	-	-
MCC	PCP	PUMP C RUNNING	2 #14	THWN	1.5"	DI	SEE NOTE 8	SPP_MN282
MCC	PCP	PUMP C OFF	2 #14	THWN	-	-	SEE NOTE 8	-
MCC	PCP	PUMP C LOCKOUT	2 #14	THWN	-	DI	SEE NOTE 8	SPP_MF282
MCC	PCP	PUMP C IN VFD	2 #14	THWN	-	DI	SEE NOTE 7	TBD
MCC	PCP	PUMP C IN BYPASS	2 #14	THWN	-	DI	SEE NOTE 7	TBD
PCP	MCC	PUMP C START	2 #14	THWN	-	DO	SEE NOTE 6	VEP_MS732 / CR154 (RELAY-CONTACT)
PCP	MCC	PUMP C STOP	2 #14	THWN	-	DO	SEE NOTE 6	VEP_MD732 / CR153 (RELAY-CONTACT)
MCC	PCP	PUMP C IN REMOTE (PLC STATUS)	2 #14	THWN	-	DI	-	SPP_YC282
MCC	PCP	PUMP C IN REMOTE (AUX. CONTROL)	2 #14	THWN	-	-	SEE NOTE 6	CR151 (RELAY COIL)
MCC	PCP	PUMP C IN LOCAL (PLC STATUS)	2 #14	THWN	-	DI	-	SPP_YH282
MCC	PCP	PUMP C IN LOCAL (AUX. CONTROL)	2 #14	THWN	-	-	SEE NOTE 6	-
MCC	PCP	PUMP C DISCHARGE VALVE OPENED	2 #14	THWN	-	DI	SEE NOTE 8	SPP_ZH282
MCC	PCP	PUMP C DISCHARGE VALVE CLOSED	2 #14	THWN	-	DI	SEE NOTE 8	SPP_ZL282
PCP	MCC	PUMP C SPEED CONTROL	2 #16	TSP	1"	AO	SEE NOTE 7	TBD
MCC	PCP	PUMP C SPEED FEEDBACK	2 #16	TSP	-	AI	SEE NOTE 7	TBD
DISCH. PRESSURE SWITCH	MCC	PUMP C MINIMUM DISCHARGE PRESSURE MET	2 #14	THWN	3/4"	-	-	-
CONE VALVE	MCC	PUMP C DISCHARGE VALVE OPENED	2 #14	THWN	1"	-	-	-
CONE VALVE	MCC	PUMP C DISCHARGE VALVE CLOSED	2 #14	THWN	-	-	-	-
CONE VALVE	MCC	PUMP C DISCHARGE VALVE 95% CLOSED	2 #14	THWN	-	-	-	-
MCC	CONE VALVE	PUMP C DISCHARGE VALVE OPEN	PER MANUFACTURER	PER MANUFACTURER	PER MANUFACTURER	-	SEE NOTE 9	-
MCC	CONE VALVE	PUMP C DISCHARGE VALVE EMERGENCY CLOSE	PER MANUFACTURER	PER MANUFACTURER	PER MANUFACTURER	-	SEE NOTE 9	-
E-STOP	MCC	PUMP C FIELD E-STOP	2 #14	THWN	3/4"	-	-	-
EPCP	MCC	PUMP A PRESSURE SHUTDOWN	2 #14	THWN	1"	-	-	-
MCC	EPCP	PUMP A PRESSURE RUNNING	2 #14	THWN	-	-	-	-
EPCP	MCC	PUMP B PRESSURE SHUTDOWN	2 #14	THWN	1"	-	-	-
MCC	EPCP	PUMP B PRESSURE RUNNING	2 #14	THWN	-	-	-	-
EPCP	MCC	PUMP C PRESSURE SHUTDOWN	2 #14	THWN	1"	-	-	-
MCC	EPCP	PUMP C PRESSURE RUNNING	2 #14	THWN	-	-	-	-
PS	EPCP	HIGH DISCHARGE PRESSURE	2 #14	THWN	3/4"	-	-	-
PS	EPCP	LOW SUCTION PRESSURE	2 #14	THWN	3/4"	-	-	-
PE	PIT-290	SUCTION PRESSURE	PER MANUFACTURER	PER MANUFACTURER	PER MANUFACTURER	-	SEE NOTE 1	SEE NOTE 1
PIT-290	PCP	SUCTION PRESSURE	2 #16	TSP	3/4"	AI	-	SPP_PI290
PE	PIT-291	DISCHARGE PRESSURE	PER MANUFACTURER	PER MANUFACTURER	PER MANUFACTURER	-	SEE NOTE 1	SEE NOTE 1
PIT-291	PCP	DISCHARGE PRESSURE	2 #16	TSP	3/4"	AI	-	SPP_PI291
ATS	PCP	LOW STATION VOLTAGE	2 #14	THWN	-	DI	-	SPP_EAL295

CONDUIT AND WIRING SCHEDULE

FROM	TO	DESCRIPTION	WIRE NO./SIZE	TYPE	CONDUIT / RACEWAY	SIGNAL TYPE	REMARKS	I/O TAG / TERM.
RESIDUAL ANALYZER	DIGITAL RECORDER NO. 4	CL2 RESIDUAL	2 #16	TSP	3/4"	AI FIELD	-	-
RESIDUAL ANALYZER	PCP	CL2 RESIDUAL	2 #16	TSP	3/4"	AI FIELD	-	-
PCP	DIGITAL RECORDER NO. 1	STATION SUCTION PRESSURE	PER MANUFACTURER	PER MANUFACTURER	PER MANUFACTURER	AO	SEE NOTE 1	-
PCP	DIGITAL RECORDER NO.1	STATION DISCHARGE PRESSURE	PER MANUFACTURER	PER MANUFACTURER	PER MANUFACTURER	AO	SEE NOTE 1	-
PCP	DIGITAL RECORDER NO. 2	STATION DISCHARGE FLOW	PER MANUFACTURER	PER MANUFACTURER	PER MANUFACTURER	AO	SEE NOTE 1	SPP_FI292
PCP	DIGITAL RECORDER NO. 3	SPARKS ELEVATED TANK LEVEL	PER MANUFACTURER	PER MANUFACTURER	PER MANUFACTURER	AO	SEE NOTE 1	SPP_LI320
PCP	MULTI-CHAN. DATA LOGGER	CL2 RESIDUAL	2 #16	TSP	1.5"	AO	SEE NOTE 7	TBD
PCP	MULTI-CHAN. DATA LOGGER	STATION SUCTION PRESSURE	2 #16	TSP	-	AO	SEE NOTE 7	TBD
PCP	MULTI-CHAN. DATA LOGGER	STATION DISCHARGE PRESSURE	2 #16	TSP	-	AO	SEE NOTE 7	TBD
PCP	MULTI-CHAN. DATA LOGGER	STATION DISCHARGE	2 #16	TSP	-	AO	SEE NOTE 7	TBD
PCP	MULTI-CHAN. DATA LOGGER	SPARKS ELEVATED TANK LEVEL	2 #16	TSP	-	AO	SEE NOTE 7	TBD
HYPO CP	PCP	CL2 LOW ROOM TEMPERATURE ALARM	2 #14	THWN	-	DI	-	SPP_TAL1013
HYPO CP	PCP	CL2 WATER SUPPLY FAILURE	2 #14	THWN	-	DI	-	SPP_FF1014
GENERATOR	PCP	GENERATOR RUNNING	2 #14	THWN	1.5"	DO	SEE NOTE 7	TBD
GENERATOR	PCP	GENERATOR LOW FUEL	2 #14	THWN	-	DO	SEE NOTE 7	TBD
GENERATOR	PCP	GENERATOR FAIL	2 #14	THWN	-	DO	SEE NOTE 7	TBD
GENERATOR	PCP	GENERATOR LOW BATTERY	2 #14	THWN	-	DO	SEE NOTE 7	TBD
GENERATOR	PCP	GENERATOR LOW OIL	2 #14	THWN	-	DO	SEE NOTE 7	TBD
GENERATOR	PCP	GENERATOR FUEL LEAK	2 #14	THWN	-	DO	SEE NOTE 7	TBD
GENERATOR	PCP	GENERATOR HIGH TEMP	2 #14	THWN	-	DO	SEE NOTE 7	TBD
MAIN POWER MONITOR	PCP	STATION UTILITY POWER FAIL	2 #14	THWN	3/4"	DI	-	-
LS-200	PCP	SUCTION VAULT PRV OPENED	2#14	THWN	3/4"	DI	-	-
LS-250	PCP	SUCTION VAULT FLOODED	PER MANUFACTURER	PER MANUFACTURER	PER MANUFACTURER	DI	SEE NOTE 1	-
LS-910	PCP	DISCHARGE VAULT PRV OPENED	2#14	THWN	3/4"	DI	-	-
LS-950	PCP	DISCHARGE VAULT FLOODED	PER MANUFACTURER	PER MANUFACTURER	PER MANUFACTURER	DI	SEE NOTE 1	-

NOTES:

1. MANUFACTURER SUPPLIED CABLE FROM INSTRUMENT TO INDICATOR / TRANSMITTER. CONDUIT TO BE SIZED BY CONTRACTOR PER MANUFACTURER'S REQUIREMENTS.
2. ALL TSP SHALL BE RUN IN SEPARATE CONDUIT FROM DISCRETE SIGNALS.
3. PROVIDE SURGE SUPPRESSION FOR ALL 4-20 mA CIRCUITS.
4. ALL SIGNALS SHALL BE RUN IN 3/4" PVC COATED RIGID GALVANIZED STEEL CONDUIT UNLESS SIZE IS OTHERWISE NOTED.
5. SCHEDULE IS PROVIDED FOR THE CONTRACTOR'S REFERENCE AND LISTS HARDWIRED PROCESS CONTROL WIRING ONLY. REFER TO SCHEMATICS AND SINGLE LINE DIAGRAMS FOR NETWORK AND ADDITIONAL CABLING REQUIREMENTS.
6. WITHIN THE PUMP CONTROL PANEL PROVIDE NEW WIRING FROM THE EXISTING PANEL EQUIPMENT TERMINALS TO NEW FIELD TERMINAL BLOCKS. INTEGRATE NEW FIELD WIRING ASSOCIATED WITH EXISTING CONTROLS.
7. WITHIIN THE PUMP CONTROL PANEL PROVIDE NEW WIRING, TERMINAL BLOCKS, PLC HARDWARE, AND SOFTWARE PROGRAMMING TO INTIGRATE THE NEW SIGNALS INTO THE EXISITNG PLC.
8. WITHIN THE PUMP CONTROL PANEL PROVIDE NEW WIRING, TERMINAL BLOCKS, PILOT LIGHTS, AND APPURTENANCES TO INTEGRATE THE SIGNALS, INDICATOR LIGHTS, AND THE PLC.
9. CONTROL WIRING TO EXISTING AND NEW SOLENOID VALVES TO BE COORDINATED WITH CONE VALVE MANUFACTURER AND EQUIPMENT IN FIELD.
10. WIRING FOR RTDs NOT LISTED. CONTRACTOR IS RESPONSIBLE FOR PROVIDING REQUIRED WIRING AS RECOMMENDED BY RTD AND MOTOR PROTECTION RELAY MANUFACTURER FOR 3-WIRE RTDs.
11 REFER TO ELECTRICAL DRAWINGS FOR POWER WIRING REQUIREMENTS. PROVIDE ALL NECESSARY GROUND WIRES, EVEN IF NOT INDICATED.

CONTRACT COMPLETION BOX

CONTRACTOR: ____

DATE COMPLETED: ____

INSPECTOR: ____

PIPE MATERIAL (Pressure Only) ____

DWG. FILENAME:

CITY OF BALTIMORE

CHIEF, OFFICE OF ENGINEERING AND CONSTRUCTION — DATE

REVISION – CITY OF BALTIMORE

CHIEF, FACILITIES ENGINEERING SECTION — DATE

SEAL: STATE OF MARYLAND — CHATPONG CHUSWAKARINT — No. 31555 — PROFESSIONAL ENGINEER

DATE : 9/17/2020

PROFESSIONAL CERTIFICATION

I HEREBY CERTIFY THAT THESE DOCUMENTS WERE PREPARED OR APPROVED BY ME, AND THAT I AM A DULY LICENSED PROFESSIONAL ENGINEER UNDER THE LAWS OF THE STATE OF MARYLAND.

LICENSE NO. 31555, EXPIRATION DATE 03/15/2021.

ENGINEER: JOHNSON, MIRMIRAN & THOMPSON
40 WIGHT AVENUE
HUNT VALLEY, MD 21030

AS-BUILT PER RECORD PRINT
BY:
DATE:

DESIGN BY: DSC
DRAWN BY: GWK
CHKD BY: BCA

REVISION | BY | DATE

CONTRACT COMPLETION BOX

P.W.A. NO.: – | R.O.W NO.: – | KEY SHEET: V-NE, DD-SE | POSITION SHT: 77 NW 5,6; 82 NW 5,6

DRAWING SCALE — PLAN SCALE: AS SHOWN — PROFILE SCALE: N/A, N/A

DEPARTMENT OF PUBLIC WORKS — SEE DRAWING 2020-0428 FOR ORIGINAL SIGNATURES

BUREAU OF ENGINEERING AND CONSTRUCTION | HIGHWAYS | STRUCTURES | STORM DRAINS | SEWER | WATER | FIELD ENGINEER | BUR. OF ENGINEERING & CONSTRUCTION

SEE DRAWING 2020-0428 FOR ORIGINAL SIGNATURES

BALTIMORE COUNTY DEPARTMENT OF PUBLIC WORKS BUREAU OF ENGINEERING & CONSTRUCTION

SPARKS PUMPING STATION

INSTRUMENTATION CONDUIT AND WIRING SCHEDULES

SPARKS WATER PUMPING STATION AND ELEVATED WATER STORAGE TANK IMPROVEMENTS

SUBDIVISION: — SPARKS, MD — ELECTION DIST. NO.: 8C3

BALTIMORE COUNTY MARYLAND

SHEET DESIGNATION: I-15
CONTRACT NUMBER: 20094WXO
JOB ORDER NUMBER: 231-203-0035-0514

DRAWING NUMBER: 2020-0485
FILE NO.:
REV. 01/17

SYMBOL LEGEND

SYMBOL	DESCRIPTION	MOUNTING HEIGHT
	208/120V PANEL, SURFACE MOUNTED	72" TO TOP
	CONTROL PANEL/CABINET, SURFACE MOUNTED	= =
	POWER TRANSFORMER, WITH GROUND	= =
G	GENERATOR	= =
	SYSTEM GROUND OR EQUIPMENT GROUND	= =
	CURRENT TRANSFORMER	= =
	FUSE	= =
	MOTOR STARTER	
AF AT 3P L2	CIRCUIT BREAKER ATTRIBUTES: AF = FRAME SIZE AT = TRIP SIZE 3P = QTY. OF POLES L2 = MISC. INFORMATION LSGI = LONG, SHORT TIME, INSTANTANEOUS, GROUND FAULT TRIP FUNCTIONS	= = = =
AF P OR AF/NF/P/3R	NON-FUSED DISCONNECT SWITCH, SIZE AS INDICATED WHERE: "AF" – INDICATES AMPERE SWITCH SIZE "NF" – DENOTES NON-FUSED "P" – DENOTES POLE "3R" – DENOTES NEMA TYPE ENCLOSURE	= =
AF AT 3P L2 OR AF/AT/P/3R	FUSED DISCONNECT SWITCH, SIZE AS INDICATED WHERE: "AF" – INDICATES AMPERE SWITCH SIZE "AT" – INDICATES AMPERE FUSE SIZE "P" – DENOTES POLE "3R" – DENOTES NEMA TYPE ENCLOSURE	= =
OR	COMBINATION MOTOR STARTER AND DISCONNECT SWITCH	= =
	MOTOR STARTER, AS INDICATED	
S_M	MANUAL MOTOR STARTER WITH MOTOR OVERLOAD PROTECTION	= =
M, 3	MOTOR TERMINATION, NUMBER INDICATES HORSEPOWER	
	AUTOMATIC TRANSFER SWITCH	= =
DPM	DIGITAL POWER METER	ADJACENT TO MECH. EQUIP.
	LIGHT FIXTURE	
	UNIT HEATER	
XX 2000A FR 1500A TR	RACK OUT 5 KV CIRCUIT BREAKER –2000A FR = 2000A FRAME –1500A RT = 1500A TRIP	

SYMBOL	DESCRIPTION	MOUNTING HEIGHT
S_X^X	SWITCH, TOGGLE "b" DENOTES SWITCH CONTROL "p" DENOTES SWITCH AND PILOT LIGHT COMBINATION "k" DENOTES KEY OPERATED SWITCH "2" DENOTES TWO POLE SWITCH	48" AFF
GFI WP	125 VOLT, 2 POLE, 3 WIRE, 20 AMP DUPLEX RECEPTACLE GFCI DENOTES – EQUIPPED WITH INTEGRAL GROUND FAULT CIRCUIT INTERRUPTER. WP DENOTES – WEATHER PROOF WHILE-IN-USE	48" AFF
PB	PUSHBUTTON STATION, AS INDICATED	= =
H	ELECTRICAL HANDHOLE	48" AFF
J OR JB	JUNCTION BOX	= =
	WALL MOUNTED LIGHT FIXTURE	= =
	PENDANT/CEILING MOUNTED LIGHT FIXTURE	= =
PMR	PHASE MONITORING RELAY	= =
	POWER FACTOR CORRECTION CAPACITOR	= =
A	ANALOG AMMETER	= =
AM SW	AMMETER SWITCH	= =
VM	ANALOG VOLTMETER	= =
VM SW	VOLTMETER SWITCH	= =
	CURRENT TRANSFORMER	= =
	POTENTIAL TRANSFORMER	= =
G R	INDICATING LIGHT: R= RED G= GREEN	= =
	GROUND ROD	
FTI	RELAY TEST SWITCH	
MPR	MOTOR PROTECTION RELAY	

ELECTRICAL CONVENTIONS

SYMBOL	DESCRIPTION
LP2A–1,3,5	HOMERUN TO PANEL "LP2A", CIRCUITS #1,3,5 (VIA 20A–1P C/B'S). PROVIDE INSULATED GROUND CONDUCTOR IN ACCORDANCE WITH SPECIFICATIONS. NUMBER OF CIRCUITS INDICATED BY QUANTITY OF ARROW HEADS.
	HASH MARKS INDICATE QUANTITY OF #12 AWG COPPER CONDUCTORS IN CONDUIT. WHEN NO HASH MARKS ARE INDICATED, CONDUIT SHALL CONTAIN (2) #12 WIRES AND #12 GROUND WIRE. ASSUME 3/4" DIAMETER CONDUIT UNLESS NOTED OTHERWISE. EXAMPLE SHOWN AT LEFT INDICATES 2 HOT, 2 NEUTRAL (LONG LINES), AND 1 GROUND WIRES.
	EXPOSED OR CONCEALED CONDUIT AND/OR WIRING.
	BELOW GRADE CONDUIT AND/OR WIRING.
# SHT	DETAIL REFERENCE "#" DENOTES DETAIL NUMBER "SHT" DENOTES SHEET NUMBER
1	SHEET KEYNOTE NUMBER
1	REVISION NUMBER
	HATCHING OR DASHED LINES INDICATE EQUIPMENT TO BE REMOVED

ABBREVIATIONS

A	AMPERES
AFF	ABOVE FINISH FLOOR
AFG	ABOVE FINISH GRADE
AHJ	AUTHORITY HAVING JURISDICTION
AHU	AIR HANDLING UNIT
AIC	AMPERE INTERRUPTING CAPACITY
ANSI	AMERICAN NATIONAL STANDARDS INSTITUTE
ATS	AUTOMATIC TRANSFER SWITCH
ATC	AUTOMATIC TEMPERATURE CONTROL
AWG	AMERICAN WIRE GAUGE
BGE	BALTIMORE GAS & ELECTRIC
BFG	BELOW FINISH GRADE
BLDG	BUILDING
C	CONDUIT
CAT	CATALOG
CB	CIRCUIT BREAKER
CKT	CIRCUIT
CLF	CURRENT LIMITING FUSE
CMS	COMBINATION MOTOR STARTER & DISCONNECT
CPT	CONTROL POWER TRANSFORMER
CT	CURRENT TRANSFORMER
CU	COPPER
DPM	DIGITAL POWER METER
DWG	DRAWING
DS	DISCONNECT SWITCH
ECB	ENCLOSED CIRCUIT BREAKER
EF	EXHAUST FAN
EM	EMERGENCY
EMT	ELECTRICAL METALLIC TUBING
EPO	EMERGENCY POWER OFF
EX	EXISTING
EXP	EXPLOSION PROOF
ETR	EXISTING TO REMAIN
F	FUSE
FLA	FULL LOAD AMPERES
FMC	FLEXIBLE METAL CONDUIT
FSHHA	FLOAT SWITCH HIGH HIGH ALARM
FSHHC	FLOAT SWITCH HIGH HIGH CONTROL
FSLLC	FLOAT SWITCH LOW LEVEL CONTROL
FT	FEET
FVNR	FULL VOLTAGE NON-REVERSING
GFCI	GROUND FAULT CIRCUIT INTERRUPTER
GND,G	GROUND OR GROUNDING
GRMC	GALVANIZED RIGID METALLIC CONDUIT
H2S	HYDROGEN SULFIDE
HOA	HAND, OFF, AUTOMATIC SWITCH
HP	HORSEPOWER
HV	HEATING AND VENTILATION UNIT
I&C	INSTRUMENTATION AND CONTROL
IEEE	INSTITUTE OF ELECTRICAL AND ELECTRONIC ENGINEERS
INT	INTERLOCK
KCMIL	THOUSAND CIRCULAR MILS
KVA	KILOVOLT AMPERES
KW	KILOWATTS
LEL	EXPLOSIVE GAS
LTG	LIGHTING
LFMC	LIQUID TIGHT FLEXIBLE METAL CONDUIT
LSI	LONG TIME, SHORT TIME, AND INSTANTANEOUS
MAU	MAKE-UP AIR UNIT
MCB	MAIN CIRCUIT BREAKER
MCC	MOTOR CONTROL CENTER
MCP	MOTOR CIRCUIT PROTECTOR
MISC	MISCELLANEOUS
MLO	MAIN LUGS ONLY
MMS	MANUAL MOTOR STARTER/SWITCH
MS	MOTOR STARTER
MSIC	MANUFACTURER SPECIFIED INSTRUMENT CABLE
MTR	MOTOR
NC	NORMALLY CLOSED
NEC	NATIONAL ELECTRIC CODE
NEMA	NATIONAL ELECTRICAL MANUFACTURES ASSOCIATION
NFPA	NATIONAL FIRE PROTECTION ASSOCIATION
NO	NORMALLY OPEN OR NUMBER
NTS	NOT TO SCALE
O2	OXYGEN
OL	OVERLOAD
P	POLE
PCP	PUMP CONTROL PANEL
PB	PUSHBUTTON
PIT	PRESSURE INSTRUMENT
PNL	PANEL
PVC	POLYVINYL CHLORIDE
PWR	POWER
PT	POTENTIAL TRANSFORMER
QTY	QUANTITY
REL	RELOCATE
REQ'D	REQUIRED
REX	REMOVE EXISTING
RGS	RIGID GALVANIZED STEEL
RMC	RIGID METAL CONDUIT
RMS	ROOT MEAN SQUARED
RNMC	RIGID NON-METALLIC CONDUIT
RTU	ROOF TOP UNIT
RVSS	REDUCED VOLTAGE SOLID STATE STARTER
SP	SPARE
SPD	SURGE PROTECTION DEVICE
SS	STAINLESS STEEL
S/S	SELECTOR SWITCH
SW	SWITCH
SYM	SYMMETRICAL
TB	TERMINAL BLOCK
TEL	TELEPHONE
TMCB	THERMAL MAGNETIC CIRCUIT BREAKER
T	TRANSFORMER
TPS	TWISTED PAIR SHIELDED
TVSS	TRANSIENT VOLTAGE SURGE SUPPRESSOR
UG	UNDERGROUND OR UNDERGRADE
UL	UNDERWRITERS LABORATORIES
UPS	UNINTERRUPTED POWER SOURCE
V	VOLT
VAC	VOLTS AC
VFD	VARIABLE FREQUENCY DRIVE
VT	VOLTAGE TRANSFORMER
W	WIRE
WH	WATER HEATER
WP	WEATHER PROOF
XFMR	TRANSFORMER
△	DELTA
Y	WYE
ø	PHASE

ELECTRICAL CONVENTIONS

LIGHTING

- LUMINAIRE TYPE – SEE LUMINAIRE SCHEDULE (A)
- CIRCUIT NUMBER (1)
- CONTROL POINT DESIGNATION (a)

LIGHTING FIXTURE SCHEDULE

FIXTURE TYPE	DESCRIPTION	MANUFACTURER	LAMPS NO.	LAMPS TYPE	VOLTAGE
A	WALL PACK, LED WITH INTEGRAL PHOTOCELL, MOUNT AT 10'-0" ABOVE FINISHED GRADE, 30 WATTS, 2600 LUMENS MINIMUM	LUMARK – XTOR3A-PC2 (OR EQUAL)	–	LED	277
B	PENDANT MOUNTED 4' INDUSTRIAL, LED FIXTURE, 38 WATTS, 4000 LUMENS MINIMUM	METALUX – 4VT2-LED5-4-FR50-UNV-L840-WL (OR EQUAL)	–	LED	277
B1	SURFACE MOUNTED 4' INDUSTRIAL, LED FIXTURE, 38 WATTS, 4000 LUMENS MINIMUM	METALUX – 4VT2-LED5-4-FR50-UNV-L840-WL (OR EQUAL)	–	LED	277
C	WALL-MOUNTED INDUSTRIAL 4' ENCLOSED LED FIXTURE 67 WATTS MAX, 8000 LUMEN MINIMUM	4VT3-LDS-8-G-UNV-L840-CD1 (OR EQUAL)	–	LED	277
D	FIXTURE; SCALABLE, ALUMINUM, POLE-MOUNTED LED AREA LIGHT WITH TYPE IV DISTRIBUTION, 6,800 LUMENS MINIMUM AND 70W MAXIMUM POLE: ROUND, TAPERED, ALUMINUM, DARK BRONZE COLOR, SIZED SUCH THAT FIXTURE IS 20'-0" ABOVE FINISHED GRADE	STREETWORKS – GAN-AF-01-LED-U-TYFT-BZ-4 (OR EQUAL)	–	LED	120
EBU	EMERGENCY LIGHTING UNIT, LEAD CALCIUM BATTERY, 12 VDC TUNGSTEN LAMP, UL LISTED FOR WET LOCATION	PHILLIPS LIGHTOLIER – IE2-100L-2-IT18-SD2-T (OR EQUAL)	2	18W	277
	EXIT SIGN, WET LOCATION, BLACK HOUSING, LED, SINGLE, GREEN LETTER, AUDIBLE DIAGNOSTICS, QTY. OF ARROWS AND FACES AS INDICATED ON PLANS	PHILLIPS CHLORIDE – ER60MLD-1-G-BA (OR EQUAL)	–	LED	277

NOTES:

1. CONTRACTOR TO VERIFY AND SUBMIT MOUNTING HEIGHTS TO ENGINEER FOR APPROVAL PRIOR TO INSTALLATION.
2. PROVIDE 10% SPARE FIXTURES FOR FIXTURE TYPES A, B, B1, AND C.

CONTRACT COMPLETION BOX

CONTRACTOR: ______
DATE COMPLETED: ______
INSPECTOR: ______
PIPE MATERIAL (Pressure Only) ______

DWG. FILENAME:

CITY OF BALTIMORE

CHIEF, OFFICE OF ENGINEERING AND CONSTRUCTION — DATE

REVISION – CITY OF BALTIMORE

CHIEF, FACILITIES ENGINEERING SECTION — DATE

SEAL — STATE OF MARYLAND — JOSEPH W. LACOMA, JR — No. 30409 — PROFESSIONAL ENGINEER

DATE : 9/17/2020

PROFESSIONAL CERTIFICATION

I HEREBY CERTIFY THAT THESE DOCUMENTS WERE PREPARED OR APPROVED BY ME, AND THAT I AM A DULY LICENSED PROFESSIONAL ENGINEER UNDER THE LAWS OF THE STATE OF MARYLAND.
LICENSE NO. 30409, EXPIRATION DATE 06/30/2022.

ENGINEER: JOHNSON, MIRMIRAN & THOMPSON
40 WIGHT AVENUE
HUNT VALLEY, MD 21030

AS-BUILT PER RECORD PRINT
BY:
DATE:

DESIGN BY: JWL
DRAWN BY: GWK
CHKD BY: JWL

REVISION	BY	DATE	P.W.A. NO.	KEY SHEET	POSITION SHT	DRAWING SCALE	DEPARTMENT OF PUBLIC WORKS
			–	V-NE DD-SE	77 NW 5,6 82 NW 5,6	PLAN SCALE: AS SHOWN	SEE DRAWING 2020-0428 FOR ORIGINAL SIGNATURES
			R.O.W NO.			PROFILE SCALE: N/A N/A	
CONTRACT COMPLETION BOX			–				

BUREAU OF ENGINEERING AND CONSTRUCTION	HIGHWAYS	STRUCTURES	STORM DRAINS	SEWER	WATER	FIELD ENGINEER	BUR. OF ENGINEERING & CONSTRUCTION

SEE DRAWING 2020-0428 FOR ORIGINAL SIGNATURES

BALTIMORE COUNTY DEPARTMENT OF PUBLIC WORKS BUREAU OF ENGINEERING & CONSTRUCTION

SPARKS PUMPING STATION

ELECTRICAL SYMBOLS, LEGEND, ABBREVIATIONS, AND SCHEDULES

SPARKS WATER PUMPING STATION AND ELEVATED WATER STORAGE TANK IMPROVEMENTS

SUBDIVISION: — SPARKS, MD — ELECTION DIST. NO.: 8C3

SHEET DESIGNATION: E-1
CONTRACT NUMBER: 20094WXO
JOB ORDER NUMBER: 231-203-0035-0514
SHEET 59 OF 71
DRAWING NUMBER: 2020-0486
FILE NO.:
REV. 01/17

GENERAL NOTES (APPLICABLE TO ALL ELECTRICAL WORK)

1. PROVIDE ALL LABOR, MATERIALS, TOOLS, EQUIPMENT, COORDINATION, ADDITIONAL DESIGN AND ALL INCIDENTALS NECESSARY TO PROVIDE A COMPLETE AND OPERABLE SYSTEM AS DETAILED ON PLANS TO THE SATISFACTION OF THE ENGINEER AND THE OWNER. COORDINATE ALL WORK WITH THE ENGINEER BEFORE THE START OF WORK. ALL WORK SHALL BE PERFORMED BY A PRE-QUALIFIED G-3 ELECTRICAL CONTRACTOR LICENSED IN BALTIMORE COUNTY AND IN THE STATE OF MARYLAND THAT HAS PREVIOUSLY PERFORMED WORK OF THIS SIZE AND TYPE.

2. INFORMATION SHOWN ON THE DRAWINGS PERTAINING TO EXISTING CONDITIONS HAS BEEN OBTAINED FROM AVAILABLE BUILDING DRAWINGS OR GENERAL FIELD OBSERVATIONS AND MAY NOT INDICATE ACTUAL EXISTING CONDITIONS IN DETAIL OR DIMENSION. THE CONTRACTOR IS RESPONSIBLE FOR DETERMINING THE ACTUAL EXISTING CONDITIONS PRIOR TO FABRICATION OR PERFORMANCE OF ANY WORK. SHOULD CONDITIONS BE DISCOVERED THAT PREVENT EXECUTION OF THE WORK AS INDICATED, THE CONTRACTOR SHALL IMMEDIATELY NOTIFY THE ENGINEER IN WRITING AND AWAIT DIRECTION BEFORE PROCEEDING WITH THE WORK.

3. PRIOR TO SUBMITTING BID, THE CONTRACTOR SHALL VISIT THE SITE AND BE THOROUGHLY FAMILIAR WITH THE EXISTING CONDITIONS AND PROPOSED CONSTRUCTION. CONTRACTOR SHALL INCLUDE IN THEIR BID ALL MATERIAL, LABOR AND ALL INCIDENTALS FOR A COMPLETE INSTALLATION WHETHER SPECIFICALLY CALLED FOR OR NOT. ALL ERRORS, DISCREPANCIES AND MISSED ITEMS SHALL BE BROUGHT TO THE ATTENTION OF THE ENGINEER DURING THE BIDDING PROCESS BY THE CONTRACTOR. THESE ITEMS SHALL BE INCLUDED IN THE BID PRICE. NO EXTRA COST WILL BE ALLOWED FOR ANY DISCREPANCY WHICH COULD HAVE BEEN NOTICED AT THE SITE VISIT BY THE CONTRACTOR.

4. UNLESS OTHERWISE NOTED, ELECTRICAL ITEMS SHOWN HEAVY DASHED (— — —) SHALL BE REMOVED, ELECTRICAL ITEMS SHOWN HEAVY SOLID (———) SHALL BE NEW, AND ELECTRICAL ITEMS SHOWN LIGHT SOLID (———) SHALL BE EXISTING TO REMAIN.

5. PERFORM WORK AS REQUIRED BY APPLICABLE CODES, REGULATIONS AND LAWS OF LOCAL, STATE AND FEDERAL GOVERNMENTS AND OTHER AUTHORITIES WITH LAWFUL JURISDICTION. ALL WORK SHALL BE IN ACCORDANCE WITH THE LATEST EDITION OF THE NATIONAL ELECTRICAL CODE. ALL WORK SHALL BE IN ACCORDANCE WITH THE BALTIMORE COUNTY REQUIREMENTS.

6. MATERIAL AND EQUIPMENT SHALL BE UL, NEMA, ANSI, IEEE, ADA & CBM APPROVED FOR INTENDED SERVICE. MATERIAL AND INSTALLATION SHALL MEET REQUIREMENTS OF NATIONAL AND STATE ELECTRICAL CODE.

7. GIVE NOTICES, FILE PLANS, OBTAIN PERMITS AND LICENSES, AND OBTAIN NECESSARY APPROVALS FROM AUTHORITIES THAT HAVE JURISDICTION. IT IS THE CONTRACTOR'S RESPONSIBILITY TO DETERMINE THE REQUIRED NOTICES, PERMITS, LICENSES, AND APPROVALS REQUIRED FOR THIS PROJECT. NOTE, BALTIMORE COUNTY DOES NOT REQUIRE PAYMENT FOR PERMITS FOR BALTIMORE COUNTY PROJECTS.

8. MAINTAIN RECORD DRAWINGS ON SITE. RECORD SET MUST BE COMPLETE AND CURRENT AND AVAILABLE FOR INSPECTION WHEN REQUISITIONS FOR PAYMENT ARE SUBMITTED.

9. GUARANTEE WORK IN WRITING FOR TWO YEARS FROM DATE OF FINAL ACCEPTANCE. REPAIR OR REPLACE DEFECTIVE MATERIALS OR INSTALLATION AT NO COST TO OWNER DURING THE GUARANTEE PERIOD. CORRECT DAMAGE CAUSED IN MAKING NECESSARY REPAIRS AND REPLACEMENTS UNDER GUARANTEE AT NO COST TO OWNER. SUBMIT GUARANTEE TO OWNER BEFORE FINAL PAYMENT.

10. COORDINATE ALL ELECTRICAL ITEMS WITH EXISTING FIELD CONDITIONS. LOCATIONS SHOWN ARE APPROXIMATE AND MAY REQUIRE MINOR ADJUSTMENT IN THE FIELD TO SATISFY THE DESIGN INTENT.

11. DAMAGE TO EXISTING FACILITIES AND EQUIPMENT SHALL BE REPAIRED OR REPLACED IMMEDIATELY BY THE CONTRACTOR AT NO ADDITIONAL EXPENSE TO THE OWNER.

12. THE LOCATIONS SHOWN ON THESE PLANS ARE APPROXIMATE AND REQUIRE COORDINATION WITH ALL OTHER TRADES AND VERIFICATION OF EXISTING CONDITIONS. ROUTING OF CONDUIT IS DIAGRAMMATIC IN NATURE AND NOT INTENDED TO SHOW ALL REQUIRED OFFSETS AND DETAILS. THE CONTRACTOR IS RESPONSIBLE FOR FIELD VERIFICATION OF ALL EXISTING ASSOCIATED EQUIPMENT AND CONDITIONS. COORDINATE THE LOCATION OF ALL EQUIPMENT WITH THE ENGINEER AND THE OWNER. CONTRACTOR IS RESPONSIBLE FOR OBTAINING ALL OTHER TRADES' DRAWINGS AND SPECIFICATIONS AND COORDINATING WITH ALL OTHER TRADES DURING BIDDING AND CONSTRUCTION.

13. FIELD VERIFY THE LOCATION OF ALL UNDERGROUND UTILITIES PRIOR TO PERFORMING ANY DIGGING. ENGAGE A QUALIFIED ELECTRICAL TESTING COMPANY TO LOCATE ALL UNDERGROUND UTILITIES IN PROPOSED CONSTRUCTION AREAS BEFORE DIGGING. THE CONTRACTOR IS RESPONSIBLE FOR CONTACTING THIS ORGANIZATION AND INCLUDING ALL ASSOCIATED COSTS IN THE BID PRICE.

14. CONTRACTOR SHALL BE RESPONSIBLE FOR MAINTAINING CONTINUITY OF ALL POWER, CONTROL, AND COMMUNICATION FUNCTIONS TO ALL AREAS AFFECTED BY DEMOLITION AND/OR NEW CONSTRUCTION.

15. CONTRACTOR SHALL NOT CUT ANY ACTIVE ELECTRICAL OR COMMUNICATIONS LINES DURING CONSTRUCTION WITHOUT NOTICE TO THE ENGINEER, BALTIMORE COUNTY, AND BALTIMORE CITY. IF THE CONTRACTOR ACCIDENTALLY CUTS A LINE, THEN HE SHALL CONTACT THE ENGINEER IMMEDIATELY BEFORE PROCEEDING WITH FURTHER WORK.

16. REPAIR AND PATCH ANY DISTURBED AREAS TO MATCH EXISTING CONDITIONS.

17. ELECTRICAL AND CONTROL EQUIPMENT AND DEVICES WITHIN DEMOLITION AREA SHOWN TO BE DEMOLISHED, SHALL BE DEMOLISHED ALONG WITH ALL POWER AND CONTROL CIRCUITS AND CONDUITS. WIRING SHALL BE REMOVED BACK TO SOURCE. REMOVE ALL CONDUITS ASSOCIATED WITH DEMOLISHED EQUIPMENT EXCEPT CONDUITS CONCEALED IN WALLS OR FLOOR SLABS. CONTRACTOR SHALL DISCONNECT, MAKE SAFE, AND REMOVE ALL ASSOCIATED ELECTRICAL EQUIPMENT AND ALL ASSOCIATED CIRCUITRY WITHIN THIS AREA. REMOVE ALL DEMOLISHED ITEMS AND DEBRIS FROM THE WORK SITE AND DISPOSE OF PROPERLY. FIELD VERIFY ALL SUPPLY CIRCUITS FOR DEMOLISHED AND RELOCATED EQUIPMENT. UPDATE ALL PANELBOARD DIRECTORIES. IDENTIFY ALL SPARE CIRCUIT BREAKER POSITIONS AND SHOW DATE WHEN SPARE WAS CONFIRMED.

18. CONTRACTOR SHALL COORDINATE WITH BALTIMORE CITY, AT LEAST TWO WEEKS PRIOR TO START OF DEMOLITION WORK, TO IDENTIFY AND TAG ALL ITEMS THAT SHALL BE RETAINED BY THE CITY. CONTRACTOR SHALL BE RESPONSIBLE FOR THE PROPER REMOVAL AND TRANSPORTATION OF ALL ITEMS TAGGED FOR SALVAGE TO THE CITY'S MAINTENANCE FACILITY LOCATED AT 3501 HILLEN ROAD, BALTIMORE MD 21212. PHONE NUMBER IS 410-396-0362. ALL ITEMS REJECTED BY THE CITY SHALL BECOME THE PROPERTY OF THE CONTRACTOR AND SHALL BE REMOVED FROM THE SITE AND DISPOSED OF IN A LEGAL AND SAFE MANNER. THE CONTRACTOR IS RESPONSIBLE FOR MEETING ALL CITY, STATE, LOCAL, AND FEDERAL LAWS GOVERNING THIS PROJECT.

19. DISCONNECT AND MAKE SAFE ANY EQUIPMENT TO BE REMOVED BY OTHERS (I.E. MOTORS, ETC.). COORDINATE REMOVAL OF EQUIPMENT WITH OTHER TRADES PRIOR TO DEMOLITION.

20. IN ANY AREA REQUIRING THE PERFORMANCE OF ANY TRADE'S WORK, THIS CONTRACTOR SHALL CAREFULLY REMOVE AND STORE ANY OR ALL ELECTRICAL ITEMS IN PATH OF WORK, REINSTALLING AND RECONNECTING SAME AS REQUIRED, IN ACCORDANCE WITH THE PLANS AND/OR AS DIRECTED AFTER COMPLETION OF OTHER TRADE'S WORK IN THAT AREA.

21. PRIOR TO THE START OF DEMOLITION, CONTRACTOR SHALL FIELD VERIFY ALL BRANCH CIRCUITS AND MAINTAIN THOSE CIRCUITS THAT EXTEND OUTSIDE OF THE SCOPE OF WORK.

22. AFTER RENOVATING EXISTING ELECTRICAL WORK, THE CONTRACTOR SHALL INSURE THAT ALL REMAINING AND NEW EQUIPMENT WILL OPERATE PROPERLY.

23. ALL ELECTRICAL WORK INDICATED TO REMAIN SHALL BE SUITABLY PROTECTED TO PREVENT ANY DAMAGE.

24. WHERE ELECTRICAL SYSTEMS PASS THROUGH RENOVATED AREAS TO SERVE OTHER PORTIONS OF THE PREMISES, SYSTEMS SHALL BE SUITABLY PROTECTED TO PREVENT DAMAGE OR RELOCATED AND THE SYSTEMS RESTORED TO NORMAL OPERATION. ANY OUTAGES IN SYSTEMS SHALL BE COORDINATED WITH OWNER. RESTORE POWER TO EXISTING TO REMAIN EQUIPMENT IF INTERRUPTED BY DEMOLISHED CIRCUITS IN THE AREA.

25. CONTRACTOR SHALL SUBMIT FOR APPROVAL, SHOP DRAWINGS FOR ALL EQUIPMENT AND MATERIALS USED ON THE PROJECT. SUBMITTALS SHALL BE APPROVED BY THE ENGINEER BEFORE PURCHASE OF MATERIALS.

26. ALL ELECTRICAL CURRENT CARRYING PARTS SHALL BE COPPER FOR ALL EQUIPMENT.

27. PERMANENTLY LABEL ALL NEW ELECTRICAL EQUIPMENT, INCLUDING BUT NOT LIMITED TO, DEVICE DESIGNATION AND SUPPLY CIRCUIT DESIGNATION. UPDATE PANEL DIRECTORIES TO INCLUDE NEW CIRCUIT INFORMATION RESULTING FROM THIS PROJECT.

28. PROVIDE TEMPORARY POWER AND LIGHTING FOR ALL TRADES AS REQUIRED TO COMPLETE THE PROJECT. ALL TEMPORARY AND INTERIM EQUIPMENT SHALL BE INSTALLED IN ACCORDANCE WITH ALL APPLICABLE CODES AND STANDARDS INCLUDING, BUT NOT LIMITED TO, NFPA 110 AND NFPA 70.

29. REFER TO SPECIFICATIONS FOR ADDITIONAL INFORMATION THAT IS NOT SHOWN ON THE DRAWINGS.

30. ALL POWER FEEDERS SHALL BE CONTINUOUS FROM SOURCE TO LOADS. SPLICES ON THE POWER FEEDERS ARE NOT ACCEPTABLE UNLESS OTHERWISE NOTED.

31. CONTROL PANELS, DISCONNECTS, STARTERS, PANELBOARDS ETC. SHALL NOT BE USED AS PULL BOXES.

32. ALL CONTROL WIRING SHALL BE STRANDED AND CONTINUOUS. SPLICES ON CONTROL WIRING ARE NOT ACCEPTABLE.

33. ALL FLOOR MOUNTED EQUIPMENT SHALL BE INSTALLED ON CONCRETE HOUSEKEEPING PADS.

34. ALL CONDUIT SHALL BE PVC-COATED RIGID GALVANIZED STEEL UNLESS NOTED OTHERWISE.

35. CONTRACTOR SHALL SUBMIT CONDUIT LAYOUT PLANS PRIOR TO INSTALLING ANY CONDUIT. THE CONDUITS AND JUNCTION BOXES SHALL BE NOT "COMBINED" WITHOUT APPROVAL FROM THE ENGINEERS OR THE COUNTY.

36. THE ELECTRICAL CONTRACTOR SHALL SCHEDULE A MEETING WITH THE RESPECTIVE BGE METER INSPECTOR AND SUBMIT PROOF OF SUCH MEETING FOR RECORD. THE CONTRACTOR IS RESPONSIBLE FOR ALL COORDINATION WITH BGE. ANY DELAY ARISING FROM LACK OF SUCH A MEETING OR ADDITIONAL REQUIREMENTS PRESENTED BY BGE AT SUCH MEETINGS WILL BE THE CONTRACTOR'S RESPONSIBILITY. THE CONTRACTOR SHALL PROVIDE A MINIMUM NOTICE OF ONE WEEK TO THE COUNTY AND ENGINEER FOR THIS MEETING.

37. CONTRACTOR IS RESPONSIBLE FOR PROVIDING ALL EQUIPMENT REQUIRED FOR BGE SERVICE INSTALLATION, INCLUDING, BUT NOT LIMITED TO TROUGHS, CABLES, AND CONDUIT TO ENSURE A COMPLETE INSTALLATION.

38. CONDUCTORS SHALL ONLY BE PULLED ONCE. IF CONDUCTORS ARE REMOVED, THEY SHALL NOT BE REINSTALLED.

GENERAL ELECTRICAL PHASING NOTES (APPLICABLE TO ALL ELECTRICAL WORK)

1. INSTALL AND TEST BYPASS PUMPING PRIOR TO PERFORMING ANY WORK ON THE MCC. BYPASS PUMPING SHALL PROVIDE CAPACITIES AND CAPABILITIES REQUIRED PER THE CONTRACT SPECIFICATIONS. CONTRACTOR SHALL CONTACT THE CITY PRIOR TO COMMENCING BYPASS PUMPING AND PRIOR TO REMOVING THE EXISTING MCC FROM SERVICE.

2. ALL OUTAGES SHALL BE KEPT TO A MINIMUM. ALL WORK THAT REQUIRES A SUSTAINED EQUIPMENT OUTAGE SHALL BE PERFORMED CONTINUOUSLY AROUND THE CLOCK UNTIL WORK IS COMPLETED UNLESS NOTED OTHERWISE.

3. NEW DISTRIBUTION SYSTEM, LIGHTING, RECEPTACLES, AND SUPPLY CIRCUITS FOR ALL OTHER EQUIPMENT SHALL BE INSTALLED AND OPERATIONAL BEFORE THE EXISTING CORRESPONDING EQUIPMENT IS REMOVED UNLESS NOTED OTHERWISE.

4. ALL ELECTRICAL WORK MUST BE COMPLETED PRIOR TO THE 30 DAY DEMONSTRATION PERIOD. THE 30 DAY DEMONSTRATION SHALL NOT BEGIN UNTIL ALL ELECTRICAL WORK IS COMPLETED. REFERENCE SPECIFICATION SECTION 01 00 00 FOR ADDITIONAL INFORMATION.

5. CONTRACTOR SHALL PROVIDE ALL TEMPORARY POWER AND CONTROLS AS REQUIRED TO KEEP EXISTING EQUIPMENT IN OPERATION.

CITY OF BALTIMORE	REVISION – CITY OF BALTIMORE
CHIEF, OFFICE OF ENGINEERING AND CONSTRUCTION — DATE	CHIEF, FACILITIES ENGINEERING SECTION — DATE

SEAL: STATE OF MARYLAND, JOSEPH W. LACOVARA, JR, No. 30409, PROFESSIONAL ENGINEER. DATE: 9/17/2020

PROFESSIONAL CERTIFICATION
I HEREBY CERTIFY THAT THESE DOCUMENTS WERE PREPARED OR APPROVED BY ME, AND THAT I AM A DULY LICENSED PROFESSIONAL ENGINEER UNDER THE LAWS OF THE STATE OF MARYLAND.
LICENSE NO. 30409, EXPIRATION DATE 06/30/2022.

ENGINEER: JOHNSON, MIRMIRAN & THOMPSON
40 WIGHT AVENUE
HUNT VALLEY, MD 21030
AS-BUILT PER RECORD PRINT
BY:
DATE:

DESIGN BY: JWL
DRAWN BY: GWK
CHKD BY: JWL

REVISION	BY	DATE
CONTRACT COMPLETION BOX		

P.W.A. NO.	KEY SHEET	POSITION SHT	DRAWING SCALE	DEPARTMENT OF PUBLIC WORKS
– / R.O.W NO. / –	V-NE DD-SE	77 NW 5,6 82 NW 5,6	PLAN SCALE: AS SHOWN; PROFILE SCALE: N/A, N/A	SEE DRAWING 2020-0428 FOR ORIGINAL SIGNATURES

BUREAU OF ENGINEERING AND CONSTRUCTION	HIGHWAYS	STRUCTURES	STORM DRAINS	SEWER	WATER	FIELD ENGINEER	BUR. OF ENGINEERING & CONSTRUCTION

SEE DRAWING 2020-0428 FOR ORIGINAL SIGNATURES

BALTIMORE COUNTY DEPARTMENT OF PUBLIC WORKS BUREAU OF ENGINEERING & CONSTRUCTION
SPARKS PUMPING STATION
ELECTRICAL GENERAL NOTES AND PHASING NOTES
SPARKS WATER PUMPING STATION AND ELEVATED WATER STORAGE TANK IMPROVEMENTS
SUBDIVISION: SPARKS, MD ELECTION DIST. NO.: 8C3

CONTRACT COMPLETION BOX
CONTRACTOR:
DATE COMPLETED:
INSPECTOR:
PIPE MATERIAL (Pressure Only)

DWG. FILENAME:

SHEET DESIGNATION	CONTRACT NUMBER
E-2	20094WX0
	JOB ORDER NUMBER
	231-203-0035-0514
	SHEET 60 OF 71
	DRAWING NUMBER
	2020-0487
	FILE NO.: REV. 01/17

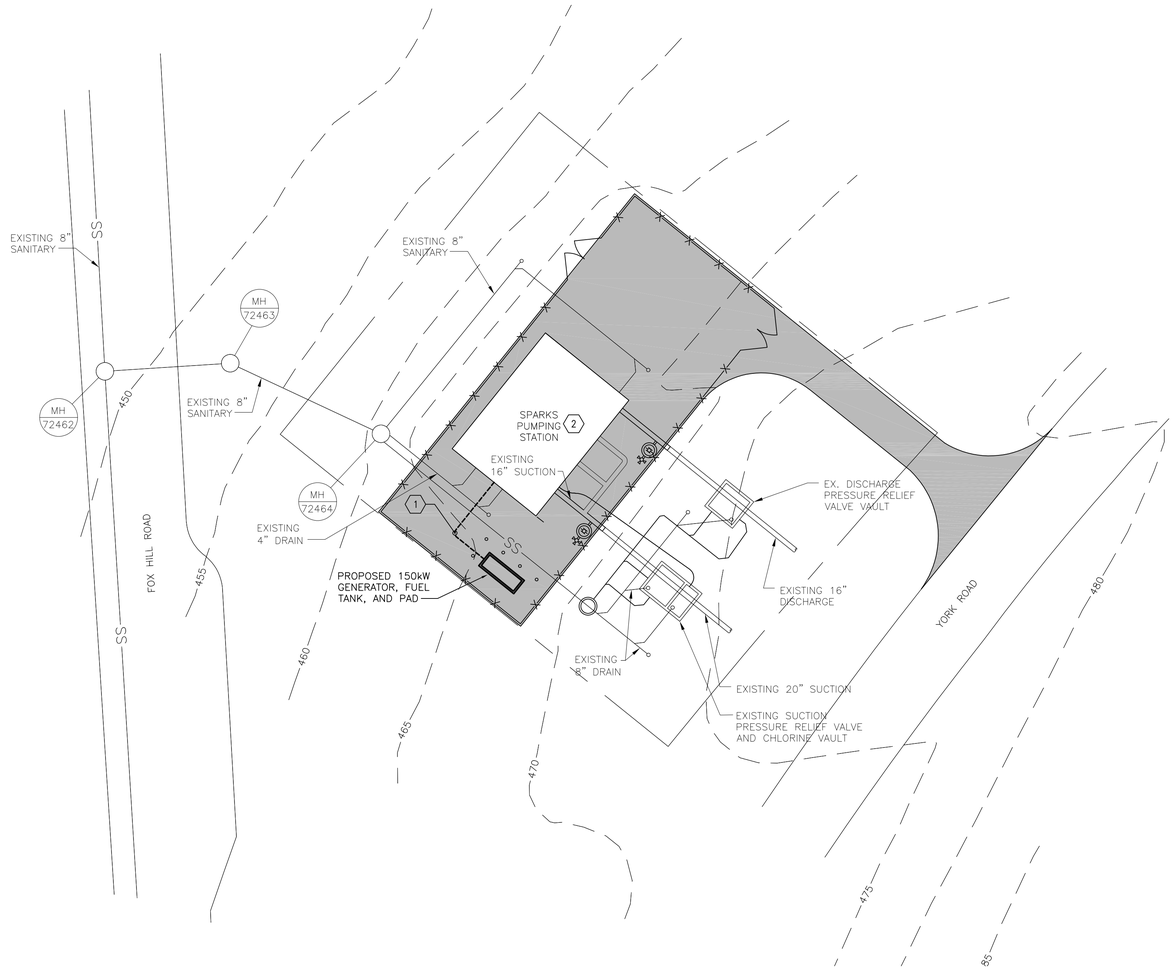

PUMP STATION – ELECTRICAL NEW WORK SITE PLAN

SCALE: 1" = 20'

GENERAL NOTES:

1. WORK SHALL BE DONE IN ACCORDANCE WITH APPROVED SEQUENCE OF CONSTRUCTION TO MINIMIZE IMPACT TO STATION OPERATIONS. SEE PHASING NOTES, SHEET E–2.

SHEET KEYNOTES:

1. PROPOSED DIRECT BURIED CONDUITS AS FOLLOWS:
   - (2) 2 1/2" WITH GENERATOR MAIN POWER SUPPLY
   - (1) 1" WITH GENERATOR STARTING CIRCUIT CONDUCTORS
   - (1) 2 1/2" SPARE
   - (1) 2"C WITH CIRCUITS R–33 AND R–35 FOR GENERATOR JACKET HEATER AND BATTERY CHARGER.
2. REFER TO E–4, E–5, AND E–6 FOR INTERIOR DEMO PLANS AND E–7, E–8, AND E–9 FOR PROPOSED INTERIOR PLANS.

LEGEND

	EXISTING BUILDING
	EXISTING CURB
	EXISTING CURB & GUTTER
100	EXISTING MAJOR CONTOUR
99	EXISTING MINOR CONTOUR
OHE	EXISTING OVERHEAD ELECTRIC
UGE	EXISTING UNDERGROUND ELECTRIC
E	EXISTING ELECTRIC MANHOLE
	EXISTING FENCELINE
	EXISTING FIRE HYDRANT
G	EXISTING GAS
GV	EXISTING GAS VALVE
	EXISTING PROPERTY LINE
	EXISTING PAVING
SS	EXISTING SANITARY
S	EXISTING SANITARY MANHOLE
	EXISTING STEAM
	EXISTING STREET LIGHT
SD	EXISTING STORMDRAIN
D	EXISTING STORMDRAIN MANHOLE
T	EXISTING TELEPHONE
	EXISTING UTILITY POLE
	EXISTING WATERBODY
W	EXISTING WATERLINE
WM	EXISTING WATER METER
WV	EXISTING WATER VALVE

10' 0 10' 20'
SCALE: 1"= 20'–0"

CITY OF BALTIMORE	REVISION – CITY OF BALTIMORE
CHIEF, OFFICE OF ENGINEERING AND CONSTRUCTION — DATE	CHIEF, FACILITIES ENGINEERING SECTION — DATE

SEAL: STATE OF MARYLAND — JOSEPH W. LACOMBE — No. 30409 — PROFESSIONAL ENGINEER

DATE: 9/17/2020

PROFESSIONAL CERTIFICATION

I HEREBY CERTIFY THAT THESE DOCUMENTS WERE PREPARED OR APPROVED BY ME, AND THAT I AM A DULY LICENSED PROFESSIONAL ENGINEER UNDER THE LAWS OF THE STATE OF MARYLAND.

LICENSE NO. 30409, EXPIRATION DATE 06/30/2022.

ENGINEER: JOHNSON, MIRMIRAN & THOMPSON
40 WIGHT AVENUE
HUNT VALLEY, MD 21030

AS–BUILT PER RECORD PRINT
BY:
DATE:

DESIGN BY: JWL
DRAWN BY: GWK
CHKD BY: JWL

REVISION	BY	DATE
CONTRACT COMPLETION BOX		

P.W.A. NO.	KEY SHEET	POSITION SHT
–	V–NE	77 NW 5,6
R.O.W NO.		
–		

DRAWING SCALE	
PLAN SCALE:	AS SHOWN
PROFILE SCALE:	N/A
	N/A

DEPARTMENT OF PUBLIC WORKS: SEE DRAWING 2020–0428 FOR ORIGINAL SIGNATURES

BUREAU OF ENGINEERING AND CONSTRUCTION	HIGHWAYS	STRUCTURES	STORM DRAINS	SEWER	WATER	FIELD ENGINEER	BUR. OF ENGINEERING & CONSTRUCTION
SEE DRAWING 2020–0428 FOR ORIGINAL SIGNATURES							

CONTRACT COMPLETION BOX
CONTRACTOR:
DATE COMPLETED:
INSPECTOR:
PIPE MATERIAL (Pressure Only)
DWG. FILENAME:

BALTIMORE COUNTY DEPARTMENT OF PUBLIC WORKS BUREAU OF ENGINEERING & CONSTRUCTION

SPARKS PUMPING STATION

PUMPING STATION – ELECTRICAL NEW WORK SITE PLAN

SPARKS WATER PUMPING STATION AND ELEVATED WATER STORAGE TANK IMPROVEMENTS

SUBDIVISION: SPARKS, MD ELECTION DIST. NO.: 8C3

SHEET DESIGNATION	CONTRACT NUMBER
E–3	20094WXO
JOB ORDER NUMBER	
231–203–0035–0514	
SHEET 61 OF 71	
DRAWING NUMBER	
2020–0488	
FILE NO.:	REV. 05/17

BALTIMORE COUNTY MARYLAND

GENERAL NOTES:

1. WORK SHALL BE DONE IN ACCORDANCE WITH APPROVED SEQUENCE OF CONSTRUCTION TO MINIMIZE IMPACT TO STATION OPERATIONS. SEE PHASING NOTES, SHEET E-2.

SHEET KEYNOTES:

1. DISCONNECT POWER TO EXISTING PUMP. REMOVE ASSOCIATED DISCONNECT SWITCH, CONDUIT, AND WIRE BACK TO SOURCE.
2. DISCONNECT POWER TO EXISTING RECEPTACLE. REMOVE RECEPTACLE, COVER PLATE OR SURFACE MOUNTED BOXES, WIRING AND EXPOSED CONDUIT BACK TO SOURCE.
3. REMOVE EXPOSED CONDUIT LEVEL WITH FLOOR, SEAL FLOOR EMBEDDED CONDUIT LEVEL TO FLOOR. ABANDON CONDUIT IN PLACE.
4. DISCONNECT POWER TO EXISTING CHLORINE EJECTOR PUMP. REMOVE ASSOCIATED DISCONNECT SWITCH, CONDUIT, AND WIRE BACK TO SOURCE.

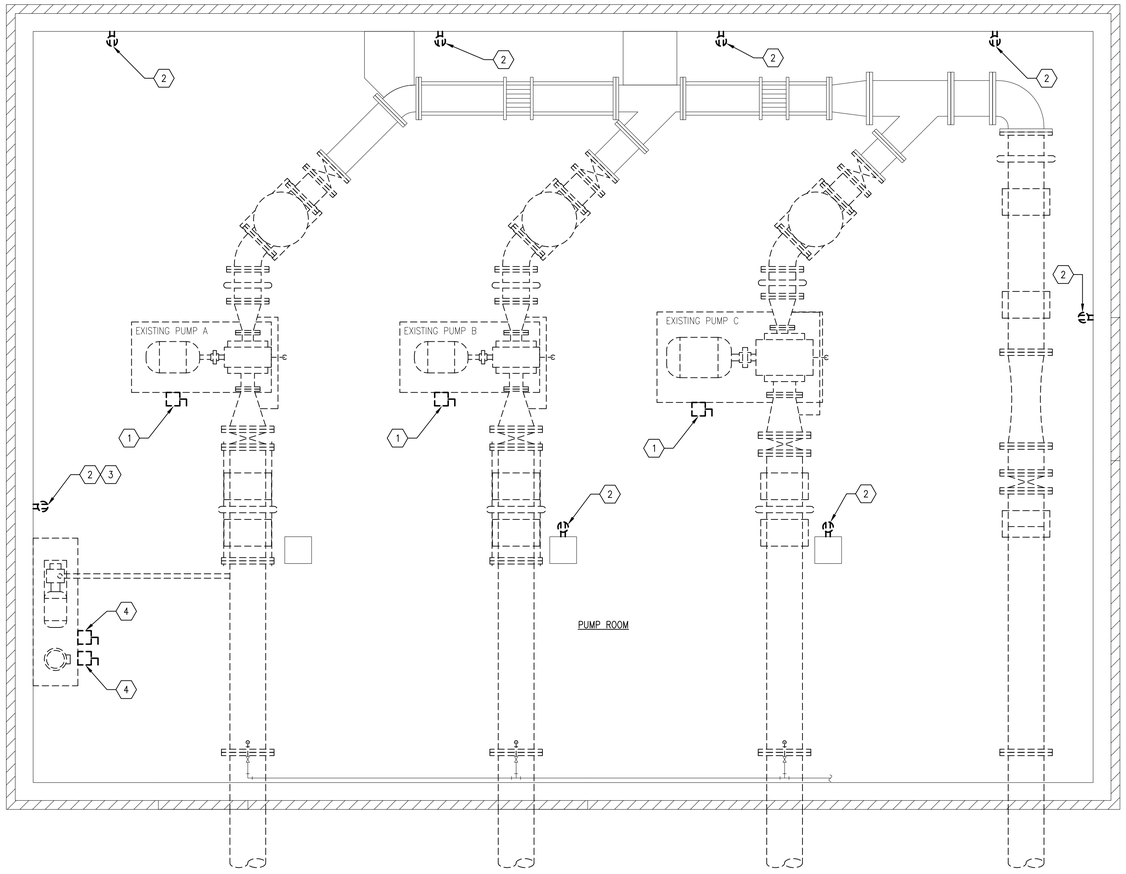

PUMPING STATION – ELECTRICAL POWER DEMOLITION PLAN AT EL. 463.50

SCALE: 3/8" = 1'-0"

SCALE: 3/8" = 1'-0"

CITY OF BALTIMORE	REVISION – CITY OF BALTIMORE
CHIEF, OFFICE OF ENGINEERING AND CONSTRUCTION — DATE	CHIEF, FACILITIES ENGINEERING SECTION — DATE

SEAL: STATE OF MARYLAND — SEAN W. LACOMBE — No. 30409 — PROFESSIONAL ENGINEER

DATE: 9/17/2020

PROFESSIONAL CERTIFICATION

I HEREBY CERTIFY THAT THESE DOCUMENTS WERE PREPARED OR APPROVED BY ME, AND THAT I AM A DULY LICENSED PROFESSIONAL ENGINEER UNDER THE LAWS OF THE STATE OF MARYLAND.

LICENSE NO. 30409, EXPIRATION DATE 06/30/2022.

ENGINEER: JOHNSON, MIRMIRAN & THOMPSON
40 WIGHT AVENUE
HUNT VALLEY, MD 21030

AS-BUILT PER RECORD PRINT

BY:
DATE:

DESIGN BY: JWL
DRAWN BY: GWK
CHKD BY: JWL

REVISION	BY	DATE
CONTRACT COMPLETION BOX		

P.W.A. NO.	KEY SHEET	POSITION SHT
–	V-NE	77 NW 5,6
R.O.W NO.		
–		

DRAWING SCALE	
PLAN SCALE:	AS SHOWN
PROFILE SCALE:	N/A
	N/A

DEPARTMENT OF PUBLIC WORKS

SEE DRAWING 2020-0428 FOR ORIGINAL SIGNATURES

BUREAU OF ENGINEERING AND CONSTRUCTION	HIGHWAYS	STRUCTURES	STORM DRAINS	SEWER	WATER	FIELD ENGINEER	BUR. OF ENGINEERING & CONSTRUCTION
SEE DRAWING 2020-0428 FOR ORIGINAL SIGNATURES							

CONTRACT COMPLETION BOX

CONTRACTOR:
DATE COMPLETED:
INSPECTOR:
PIPE MATERIAL (Pressure Only)

DWG. FILENAME:

BALTIMORE COUNTY DEPARTMENT OF PUBLIC WORKS BUREAU OF ENGINEERING & CONSTRUCTION

SPARKS PUMPING STATION

PUMPING STATION – ELECTRICAL LOWER LEVEL POWER DEMOLITION PLAN

SPARKS WATER PUMPING STATION AND ELEVATED WATER STORAGE TANK IMPROVEMENTS

SUBDIVISION: SPARKS, MD ELECTION DIST. NO.: 8C3

SHEET DESIGNATION	CONTRACT NUMBER
E-4	20094WXO
JOB ORDER NUMBER	231-203-0035-0514
SHEET 62 OF 71	
DRAWING NUMBER	2020-0489
FILE NO.:	ATV 40.TIF

GENERAL NOTES:

1. WORK SHALL BE DONE IN ACCORDANCE WITH APPROVED SEQUENCE OF CONSTRUCTION TO MINIMIZE IMPACT TO STATION OPERATIONS. SEE PHASING NOTES, SHEET E-2.

SHEET KEYNOTES:

1. DISCONNECT POWER TO UNIT HEATER. REMOVE CONDUIT AND WIRE BACK TO SOURCE.
2. DISCONNECT EXISTING EXHAUST FAN. REMOVE CONDUIT AND WIRE BACK TO SOURCE.
3. DISCONNECT POWER TO EXISTING RECEPTACLE. REMOVE RECEPTACLE, COVER PLATE, WIRING AND EXPOSED CONDUIT BACK TO SOURCE. REMOVE SURFACE MOUNTED BOXES, WIRING AND EXPOSED CONDUIT BACK TO SOURCE. SEAL AND ABANDON ALL CONDUIT EMBEDDED TO WALL.
4. DISCONNECT AND REMOVE ABANDONED CABLING BACK TO SOURCE, REMOVE JUNCTION BOX AND CONDUIT FLUSH WITH FLOOR, SEAL AND ABANDON CONDUIT IN FLOOR.
5. DISCONNECT AND REMOVE POWER CONDUCTORS AND CONDUIT FROM RESIDUAL CHLORINE ANALYZER BACK TO SOURCE,
6. DISCONNECT AND REMOVE POWER CONDUCTORS AND CONDUIT FROM TRANSFORMER BACK TO SOURCE,
7. DISCONNECT AND REMOVE POWER AND CONTROL CONDUCTORS AND CONDUIT FROM MCC BACK TO SOURCE,

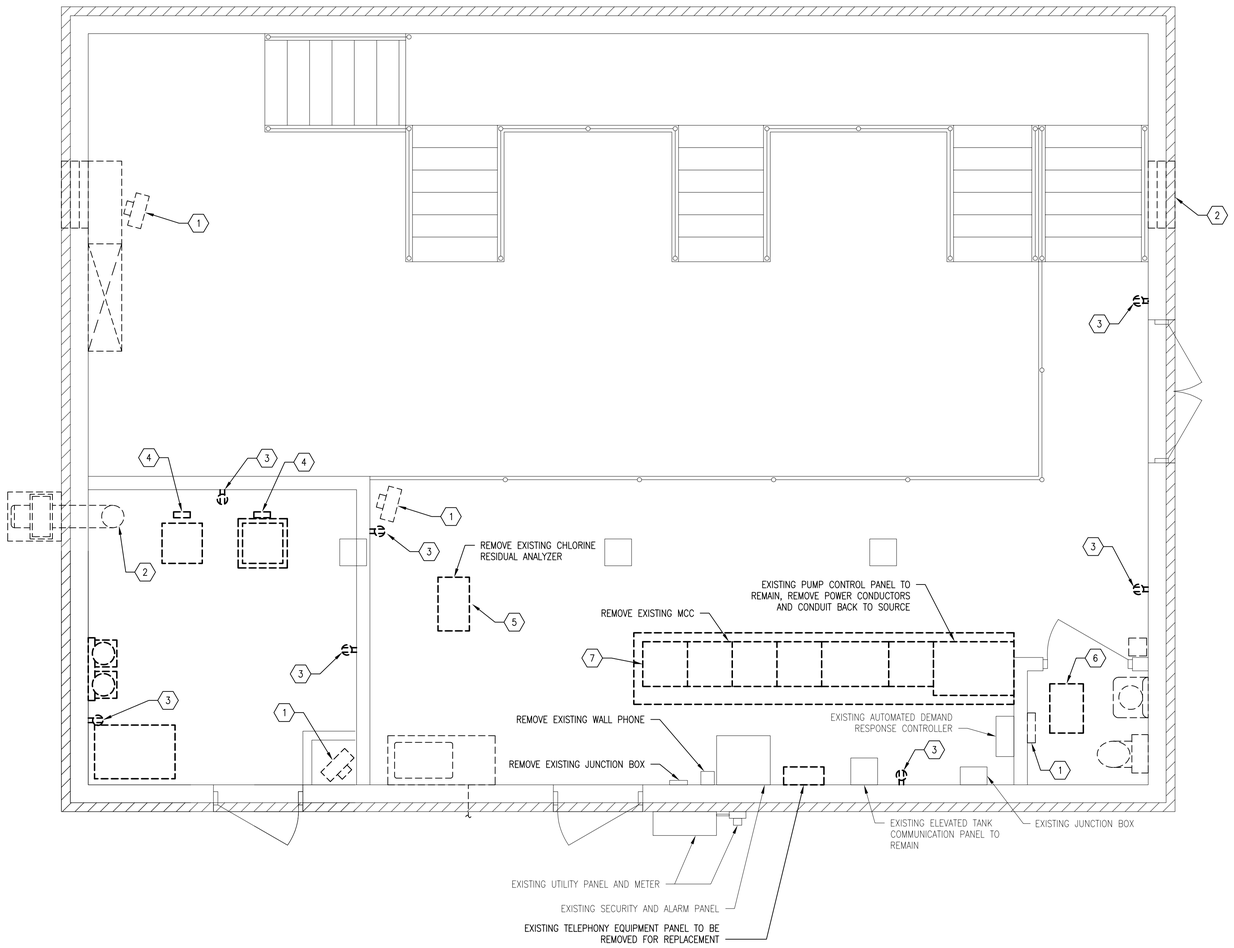

PUMPING STATION – ELECTRICAL POWER DEMOLITION PLAN AT EL. 475.00

SCALE: 3/8" = 1'-0"

CITY OF BALTIMORE	REVISION – CITY OF BALTIMORE
CHIEF, OFFICE OF ENGINEERING AND CONSTRUCTION — DATE	CHIEF, FACILITIES ENGINEERING SECTION — DATE

SEAL: STATE OF MARYLAND — LACKMAN, JAMES R. — No. 30409 — PROFESSIONAL ENGINEER

DATE: 9/17/2020

PROFESSIONAL CERTIFICATION

I HEREBY CERTIFY THAT THESE DOCUMENTS WERE PREPARED OR APPROVED BY ME, AND THAT I AM A DULY LICENSED PROFESSIONAL ENGINEER UNDER THE LAWS OF THE STATE OF MARYLAND.

LICENSE NO. 30409, EXPIRATION DATE 06/30/2022

ENGINEER: JOHNSON, MIRMIRAN & THOMPSON
40 WIGHT AVENUE
HUNT VALLEY, MD 21030

AS-BUILT PER RECORD PRINT
BY:
DATE:

DESIGN BY: JWL
DRAWN BY: GWK
CHKD BY: JWL

REVISION	BY	DATE
CONTRACT COMPLETION BOX		

P.W.A. NO.	KEY SHEET	POSITION SHT
–	V-NE	77 NW 5,6
R.O.W NO.		
–		

DRAWING SCALE	
PLAN SCALE:	AS SHOWN
PROFILE SCALE:	N/A
	N/A

DEPARTMENT OF PUBLIC WORKS: SEE DRAWING 2020-0428 FOR ORIGINAL SIGNATURES

BUREAU OF ENGINEERING AND CONSTRUCTION	HIGHWAYS	STRUCTURES	STORM DRAINS	SEWER	WATER	FIELD ENGINEER	BUR. OF ENGINEERING & CONSTRUCTION
SEE DRAWING 2020-0428 FOR ORIGINAL SIGNATURES							

1' 0 1' 2' 3'
SCALE: 3/8" = 1'-0"

CONTRACT COMPLETION BOX

CONTRACTOR:
DATE COMPLETED:
INSPECTOR:
PIPE MATERIAL (Pressure Only)

DWG. FILENAME:

BALTIMORE COUNTY DEPARTMENT OF PUBLIC WORKS BUREAU OF ENGINEERING & CONSTRUCTION

SPARKS PUMPING STATION

PUMPING STATION – ELECTRICAL UPPER LEVEL POWER DEMOLITION PLAN

SPARKS WATER PUMPING STATION AND ELEVATED WATER STORAGE TANK IMPROVEMENTS

SUBDIVISION: SPARKS, MD ELECTION DIST. NO.: 8C3

SHEET DESIGNATION	CONTRACT NUMBER
E-5	20094WXO
JOB ORDER NUMBER	231-203-0035-0514
SHEET 63 OF 71	
DRAWING NUMBER	2020-0490
FILE NO.:	REV. 8/2/19

GENERAL NOTES:

1. WORK SHALL BE DONE IN ACCORDANCE WITH APPROVED SEQUENCE OF CONSTRUCTION TO MINIMIZE IMPACT TO STATION OPERATIONS. SEE PHASING NOTES, SHEET E-2.

SHEET KEYNOTES:

1. REMOVE EXISTING SUSPENDED FLUORESCENT LIGHT FIXTURE. REMOVE ASSOCIATED CONDUIT AND WIRE BACK TO SOURCE.
2. REMOVE EXISTING SURFACE MOUNTED LIGHT FIXTURE MOUNTED TO UNDERSIDE OF MEZZANINE. REMOVE ASSOCIATED CONDUIT AND WIRE BACK TO SOURCE.
3. REMOVE EXISTING EXTERIOR DUAL HEAD FLOOD LIGHT FIXTURE. REMOVE ASSOCIATED CONDUIT AND WIRE BACK TO SOURCE.
4. REMOVE EXISTING EXTERIOR STANCHION MOUNT LIGHT FIXTURE. REMOVE ASSOCIATED CONDUIT AND WIRE BACK TO SOURCE.

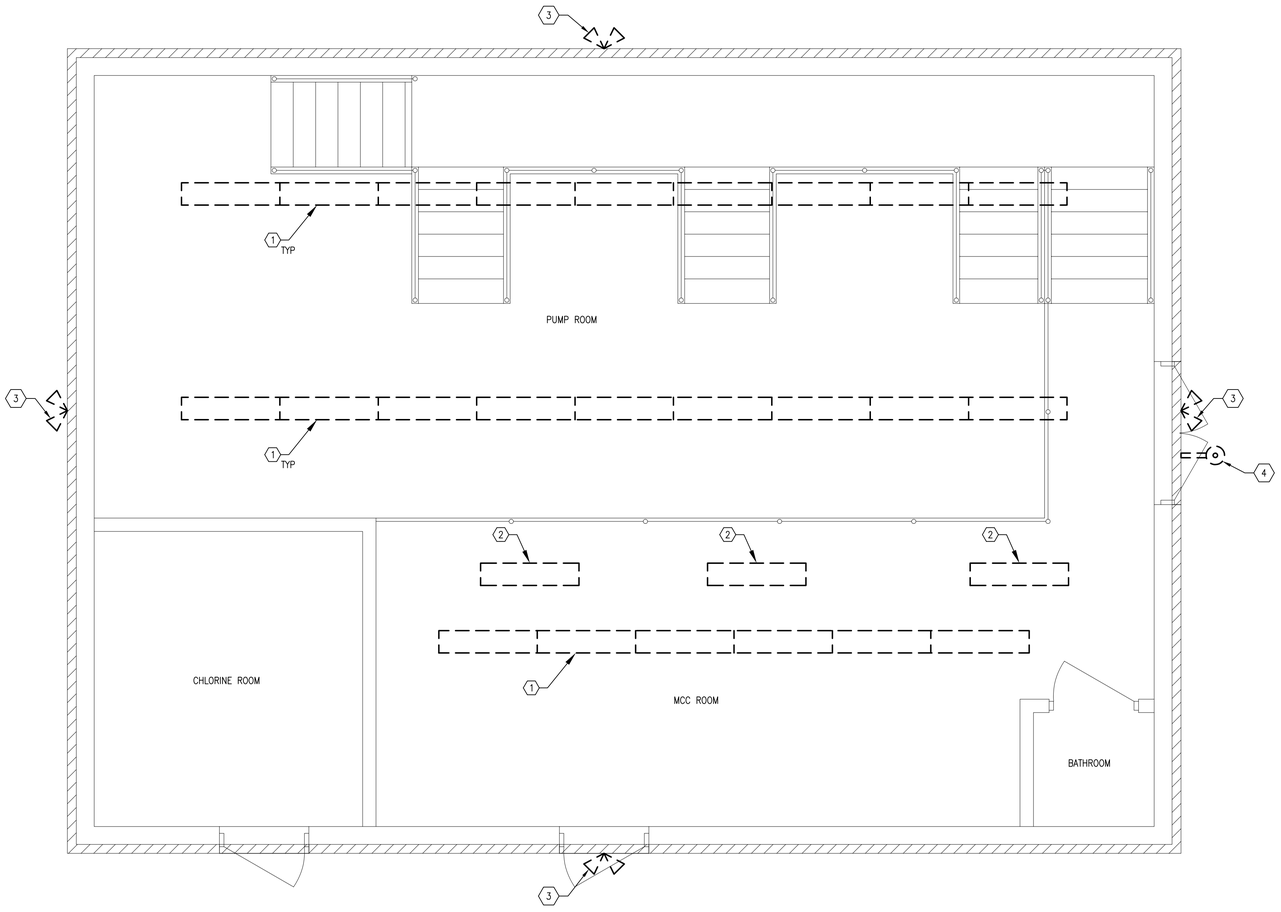

PUMPING STATION – ELECTRICAL LIGHTING DEMOLITION PLAN AT EL. 473.50

SCALE: 3/8" = 1'-0"

CITY OF BALTIMORE	REVISION – CITY OF BALTIMORE
CHIEF, OFFICE OF ENGINEERING AND CONSTRUCTION DATE	CHIEF, FACILITIES ENGINEERING SECTION DATE

SEAL: STATE OF MARYLAND — JOSEPH W. LACOMBE, JR. — No. 30409 — PROFESSIONAL ENGINEER

DATE: 9/17/2020

PROFESSIONAL CERTIFICATION

I HEREBY CERTIFY THAT THESE DOCUMENTS WERE PREPARED OR APPROVED BY ME, AND THAT I AM A DULY LICENSED PROFESSIONAL ENGINEER UNDER THE LAWS OF THE STATE OF MARYLAND.

LICENSE NO. 30409, EXPIRATION DATE 06/30/2022

ENGINEER: JOHNSON, MIRMIRAN & THOMPSON
40 WIGHT AVENUE
HUNT VALLEY, MD 21030

AS-BUILT PER RECORD PRINT

BY:
DATE:

DESIGN BY: JWL
DRAWN BY: GWK
CHKD BY: JWL

REVISION	BY	DATE
CONTRACT COMPLETION BOX		

P.W.A. NO.	KEY SHEET	POSITION SHT
–	V-NE	77 NW 5,6
R.O.W NO.		
–		

DRAWING SCALE	
PLAN SCALE:	AS SHOWN
PROFILE SCALE:	N/A
	N/A

DEPARTMENT OF PUBLIC WORKS

SEE DRAWING 2020-0428 FOR ORIGINAL SIGNATURES

BUREAU OF ENGINEERING AND CONSTRUCTION	HIGHWAYS	STRUCTURES	STORM DRAINS	SEWER	WATER	FIELD ENGINEER	BUR. OF ENGINEERING & CONSTRUCTION

SEE DRAWING 2020-0428 FOR ORIGINAL SIGNATURES

1' 0 1' 2' 3'
SCALE: 3/8" = 1'-0"

BALTIMORE COUNTY DEPARTMENT OF PUBLIC WORKS BUREAU OF ENGINEERING & CONSTRUCTION

SPARKS PUMPING STATION

PUMPING STATION – ELECTRICAL LIGHTING DEMOLITION PLAN

SPARKS WATER PUMPING STATION AND ELEVATED WATER STORAGE TANK IMPROVEMENTS

SUBDIVISION: SPARKS, MD ELECTION DIST. NO.: 8C3

CONTRACT COMPLETION BOX

CONTRACTOR:
DATE COMPLETED:
INSPECTOR:
PIPE MATERIAL (Pressure Only)

DWG. FILENAME:

SHEET DESIGNATION	CONTRACT NUMBER
E-6	20094WXO
	JOB ORDER NUMBER
	231-203-0035-0514
	SHEET 64 OF 71
	DRAWING NUMBER
	2020-0491
	FILE NO.:

GENERAL NOTES:

1. WORK SHALL BE DONE IN ACCORDANCE WITH APPROVED SEQUENCE OF CONSTRUCTION TO MINIMIZE IMPACT TO STATION OPERATIONS. SEE PHASING NOTES, SHEET E-2.

SHEET KEYNOTES:

1. EMERGENCY STOP BUTTON. REFER TO MONITORING AND CONTROL WIRING ON INSTRUMENTATION DRAWING I-2.
2. PROVIDE WIRING AS RECOMMENDED IN 1"C FROM MOTOR RTDs TO MOTOR PROTECTION RELAY FOR PUMP IN MCC.
3. PRESSURE TRANSDUCER.
4. PROVIDE CIRCUIT FOR MOTOR HEATER.

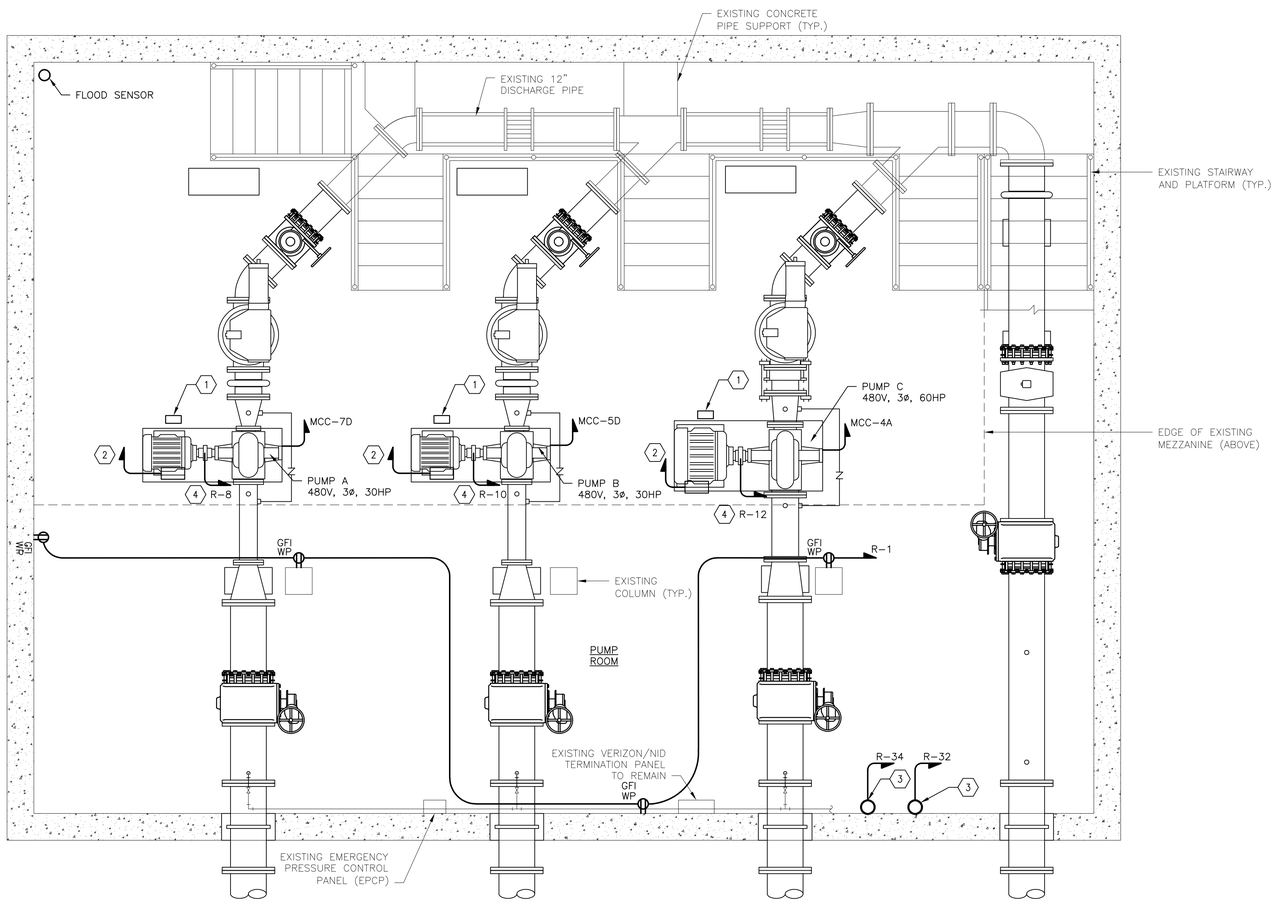

PUMPING STATION – ELECTRICAL POWER NEW WORK PLAN AT EL. 463.50

SCALE: 3/8" = 1'-0"

CITY OF BALTIMORE	REVISION – CITY OF BALTIMORE
CHIEF, OFFICE OF ENGINEERING AND CONSTRUCTION DATE	CHIEF, FACILITIES ENGINEERING SECTION DATE

SEAL: STATE OF MARYLAND SEPTIMUS W. LACOMBE JR. No. 30409 PROFESSIONAL ENGINEER

DATE: 9/17/2020

PROFESSIONAL CERTIFICATION

I HEREBY CERTIFY THAT THESE DOCUMENTS WERE PREPARED OR APPROVED BY ME, AND THAT I AM A DULY LICENSED PROFESSIONAL ENGINEER UNDER THE LAWS OF THE STATE OF MARYLAND.

LICENSE NO. 30409, EXPIRATION DATE 06/30/2022

ENGINEER: JOHNSON, MIRMIRAN & THOMPSON
40 WIGHT AVENUE
HUNT VALLEY, MD 21030

AS-BUILT PER RECORD PRINT
BY:
DATE:

DESIGN BY: JWL
DRAWN BY: GWK
CHKD BY: JWL

REVISION	BY	DATE
CONTRACT COMPLETION BOX		

P.W.A. NO.	KEY SHEET	POSITION SHT
–	V-NE	77 NW 5,6
R.O.W NO.		
–		

DRAWING SCALE	
PLAN SCALE:	AS SHOWN
PROFILE SCALE:	N/A
	N/A

DEPARTMENT OF PUBLIC WORKS

SEE DRAWING 2020-0428 FOR ORIGINAL SIGNATURES

BUREAU OF ENGINEERING AND CONSTRUCTION	HIGHWAYS	STRUCTURES	STORM DRAINS	SEWER	WATER	FIELD ENGINEER	BUR. OF ENGINEERING & CONSTRUCTION

SEE DRAWING 2020-0428 FOR ORIGINAL SIGNATURES

1' 0 1' 2' 3'
SCALE: 3/8"= 1'-0"

BALTIMORE COUNTY DEPARTMENT OF PUBLIC WORKS BUREAU OF ENGINEERING & CONSTRUCTION

SPARKS PUMPING STATION

PUMPING STATION – ELECTRICAL LOWER LEVEL POWER NEW WORK PLAN

SPARKS WATER PUMPING STATION AND ELEVATED WATER STORAGE TANK IMPROVEMENTS

SUBDIVISION: SPARKS, MD ELECTION DIST. NO.: 8C3

CONTRACT COMPLETION BOX

CONTRACTOR:
DATE COMPLETED:
INSPECTOR:
PIPE MATERIAL (Pressure Only)

DWG. FILENAME:

SHEET DESIGNATION	CONTRACT NUMBER
E-7	20094WXO
	JOB ORDER NUMBER
	231-203-0035-0514
	SHEET 65 OF 71
	DRAWING NUMBER
	2020-0492
	FILE NO.: REV. 05/17

BALTIMORE COUNTY MARYLAND

GENERAL NOTES:

1. WORK SHALL BE DONE IN ACCORDANCE WITH APPROVED SEQUENCE OF CONSTRUCTION TO MINIMIZE IMPACT TO STATION OPERATIONS. SEE PHASING NOTES, SHEET E-2. CONDUIT ROUTING SHALL BE COORDINATED WITH FULL CRANE OPERATION. CONDUIT SHALL NOT BE ROUTED IN AREAS WHERE IT MAY INTERFERE WITH THE CRANE OPERATION.

SHEET KEYNOTES:

1. DISCONNECT SWITCH PROVIDED WITH UNIT.
2. 480V, 3ø, FVNR, NEMA SIZE 1 COMBINATION STARTER/FUSED DISCONNECT SWITCH FUSED AT 5 AMPS IN NEMA 1 ENCLOSURE CONSISTING OF (HAND-OFF-AUTO SELECTOR SWITCH, (4) AUXILIARY CONTACTS, AND (2) PILOT LIGHTS (RED "RUN" AND GREEN "OFF").
3. DIGITAL RECORDER PANEL
4. CHLORINE RESIDUAL ANALYZER
5. 240V, 1ø, FVNR NEMA SIZE 1 COMBINATION STARTER/FUSED DISCONNECT SWITCH FUSED AT 10A IN NEMA 1 ENCLOSURE CONSISTING OF HAND-OFF-AUTO SELECTOR SWITCH, (4) AUXILIARY CONTACTS, AND (2) PILOT LIGHTS (RED "RUN" AND GREEN "OFF").
6. 240V, 2ø, 30A FUSED DISCONNECT SWITCH FUSED AT 25A IN NEMA 1 ENCLOSURE FOR WATER HEATER.
7. COMPOUND LOOP CONTROLLER
8. NaOCl FEED SYSTEM CONTROL PANEL

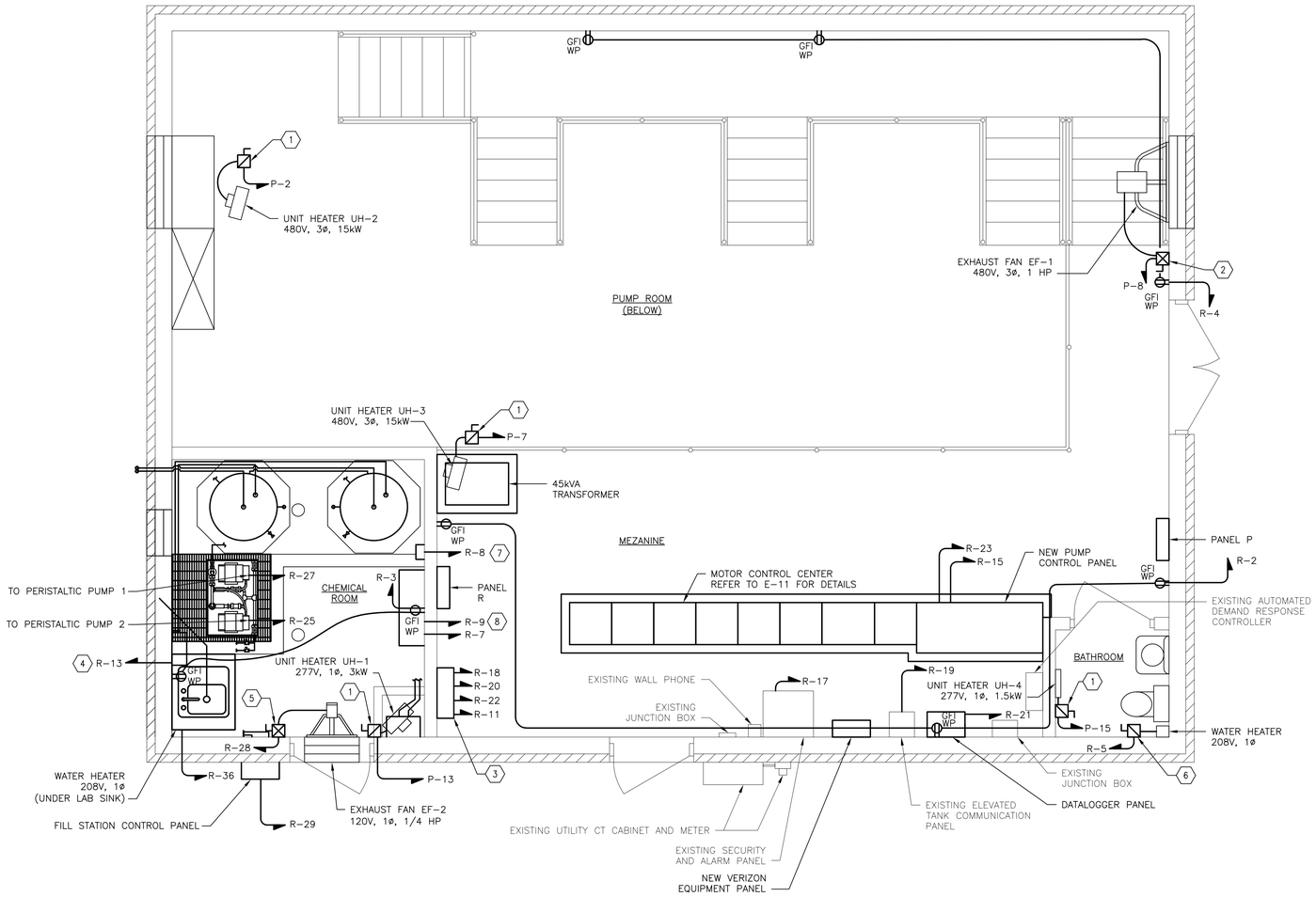

PUMPING STATION – ELECTRICAL POWER NEW WORK PLAN AT EL. 473.50

SCALE: 3/8" = 1'-0"

CITY OF BALTIMORE	REVISION – CITY OF BALTIMORE
CHIEF, OFFICE OF ENGINEERING AND CONSTRUCTION — DATE	CHIEF, FACILITIES ENGINEERING SECTION — DATE

SEAL: STATE OF MARYLAND — LACY W. THOMPSON — No. 30409 — PROFESSIONAL ENGINEER

DATE: 9/17/2020

PROFESSIONAL CERTIFICATION

I HEREBY CERTIFY THAT THESE DOCUMENTS WERE PREPARED OR APPROVED BY ME, AND THAT I AM A DULY LICENSED PROFESSIONAL ENGINEER UNDER THE LAWS OF THE STATE OF MARYLAND.

LICENSE NO. 30409, EXPIRATION DATE 06/30/2022

ENGINEER: JOHNSON, MIRMIRAN & THOMPSON
40 WIGHT AVENUE
HUNT VALLEY, MD 21030

AS-BUILT PER RECORD PRINT
BY:
DATE:

DESIGN BY: JWL
DRAWN BY: GWK
CHKD BY: JWL

REVISION	BY	DATE
CONTRACT COMPLETION BOX		

P.W.A. NO.	KEY SHEET	POSITION SHT
–	V-NE	77 NW 5,6
R.O.W NO.		
–		

DRAWING SCALE	
PLAN SCALE:	AS SHOWN
PROFILE SCALE:	N/A
	N/A

DEPARTMENT OF PUBLIC WORKS: SEE DRAWING 2020-0428 FOR ORIGINAL SIGNATURES

BUREAU OF ENGINEERING AND CONSTRUCTION	HIGHWAYS	STRUCTURES	STORM DRAINS	SEWER	WATER	FIELD ENGINEER	BUR. OF ENGINEERING & CONSTRUCTION
SEE DRAWING 2020-0428 FOR ORIGINAL SIGNATURES							

CONTRACT COMPLETION BOX

CONTRACTOR:
DATE COMPLETED:
INSPECTOR:
PIPE MATERIAL (Pressure Only)

DWG. FILENAME:

1' 0 1' 2' 3'
SCALE: 3/8" = 1'-0"

BALTIMORE COUNTY DEPARTMENT OF PUBLIC WORKS BUREAU OF ENGINEERING & CONSTRUCTION

SPARKS PUMPING STATION

PUMPING STATION – ELECTRICAL UPPER LEVEL POWER NEW WORK PLAN

SPARKS WATER PUMPING STATION AND ELEVATED WATER STORAGE TANK IMPROVEMENTS

SUBDIVISION: SPARKS, MD ELECTION DIST. NO.: 8C3

SHEET DESIGNATION	CONTRACT NUMBER
E-8	20094WX0
JOB ORDER NUMBER	
231-203-0035-0514	
SHEET 66 OF 71	
DRAWING NUMBER	
2020-0493	
FILE NO.:	REV. 8/17/7

GENERAL NOTES:

1. WORK SHALL BE DONE IN ACCORDANCE WITH APPROVED SEQUENCE OF CONSTRUCTION TO MINIMIZE IMPACT TO STATION OPERATIONS. SEE PHASING NOTES, SHEET E-2.
2. REFER TO E-1 FOR LIGHTING FIXTURE SCHEDULE.
3. CONDUIT ROUTING SHALL BE COORDINATED WITH FULL CRANE OPERATION. CONDUIT SHALL NOT BE ROUTED IN AREAS WHERE IT MAY INTERFERE WITH THE CRANE OPERATION

SHEET KEYNOTES:

1. CONNECT FIXTURE AHEAD OF ANY SWITCHES.
2. WALL MOUNT FIXTURE 13' ABOVE FINISHED FLOOR.
3. WALL MOUNT FIXTURE 7.5' ABOVE FINISHED FLOOR.

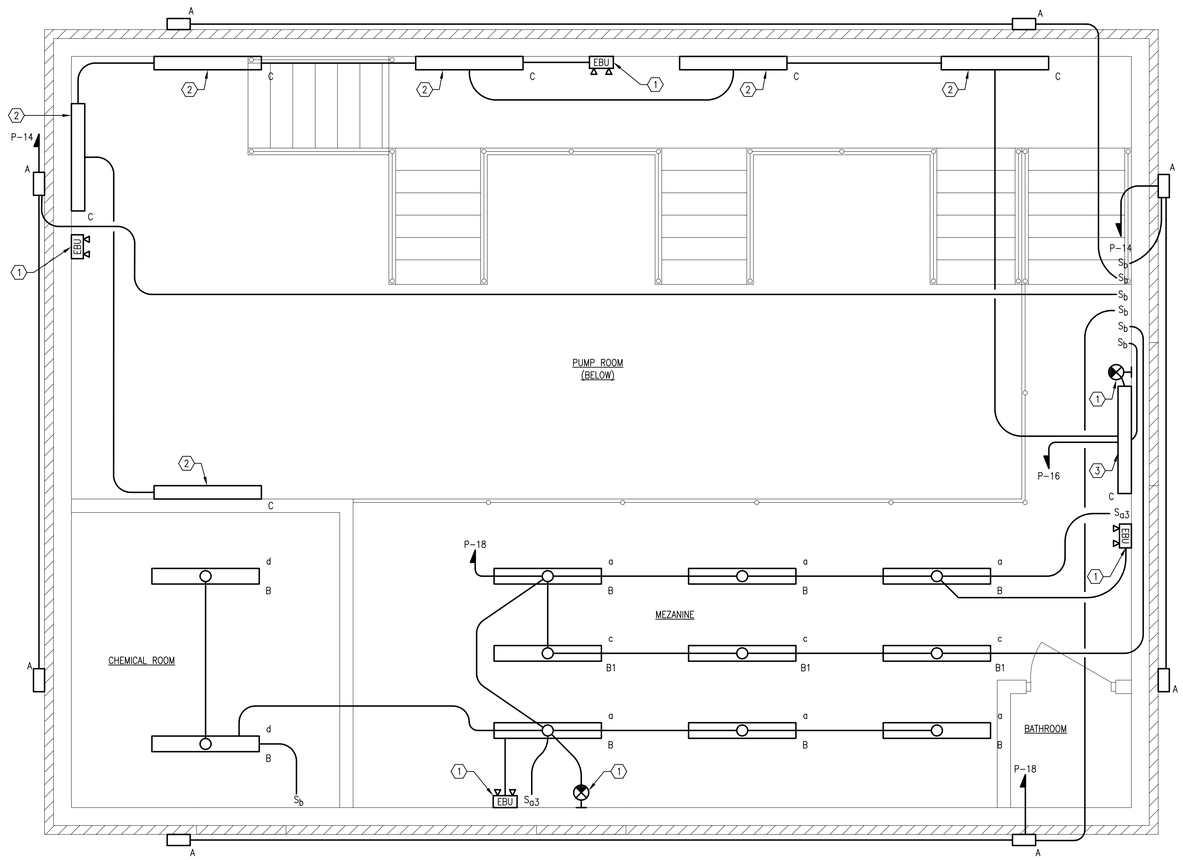

PUMPING STATION – ELECTRICAL LIGHTING NEW WORK PLAN AT EL. 473.50

SCALE: 3/8" = 1'-0"

CITY OF BALTIMORE	REVISION – CITY OF BALTIMORE
CHIEF, OFFICE OF ENGINEERING AND CONSTRUCTION DATE	CHIEF, FACILITIES ENGINEERING SECTION DATE

SEAL: STATE OF MARYLAND · JOSEPH W. LACOMBE · No. 30409 · PROFESSIONAL ENGINEER

DATE: 9/17/2020

PROFESSIONAL CERTIFICATION

I HEREBY CERTIFY THAT THESE DOCUMENTS WERE PREPARED OR APPROVED BY ME, AND THAT I AM A DULY LICENSED PROFESSIONAL ENGINEER UNDER THE LAWS OF THE STATE OF MARYLAND.

LICENSE NO. 30409, EXPIRATION DATE 06/30/2022

ENGINEER: JOHNSON, MIRMIRAN & THOMPSON
40 WIGHT AVENUE
HUNT VALLEY, MD 21030

AS-BUILT PER RECORD PRINT
BY:
DATE:

DESIGN BY: JWL
DRAWN BY: GWK
CHKD BY: JWL

REVISION	BY	DATE
CONTRACT COMPLETION BOX		

P.W.A. NO.	KEY SHEET	POSITION SHT
–	V-NE	77 NW 5,6
R.O.W NO.		
–		

DRAWING SCALE	
PLAN SCALE:	AS SHOWN
PROFILE SCALE:	N/A
	N/A

DEPARTMENT OF PUBLIC WORKS: SEE DRAWING 2020-0428 FOR ORIGINAL SIGNATURES

BUREAU OF ENGINEERING AND CONSTRUCTION | HIGHWAYS | STRUCTURES | STORM DRAINS | SEWER | WATER | FIELD ENGINEER | BUR. OF ENGINEERING & CONSTRUCTION

SEE DRAWING 2020-0428 FOR ORIGINAL SIGNATURES

1' 0 1' 2' 3'
SCALE: 3/8" = 1'-0"

BALTIMORE COUNTY DEPARTMENT OF PUBLIC WORKS BUREAU OF ENGINEERING & CONSTRUCTION

SPARKS PUMPING STATION

PUMPING STATION – ELECTRICAL LIGHTING NEW WORK PLAN

SPARKS WATER PUMPING STATION AND ELEVATED WATER STORAGE TANK IMPROVEMENTS

SUBDIVISION: SPARKS, MD ELECTION DIST. NO.: 8C3

CONTRACT COMPLETION BOX

CONTRACTOR:
DATE COMPLETED:
INSPECTOR:
PIPE MATERIAL (Pressure Only)

DWG. FILENAME:

SHEET DESIGNATION	CONTRACT NUMBER
E-9	20094WXO
	JOB ORDER NUMBER
	231-203-0035-0514
	SHEET 67 OF 71
	DRAWING NUMBER
	2020-0494
	FILE NO.:

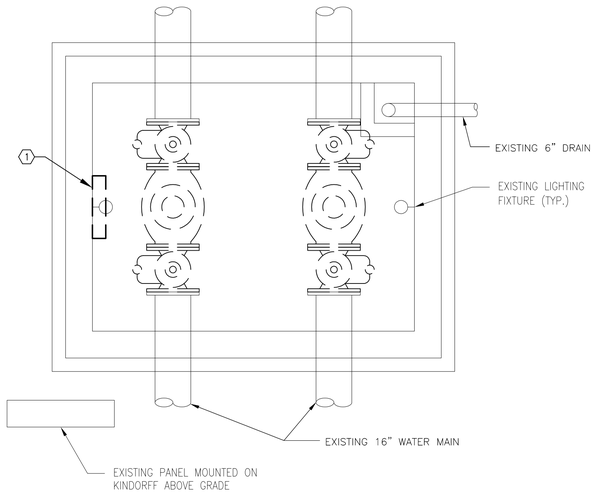

ELEVATED STORAGE TANK VALVE VAULT – DEMOLITION PLAN

SCALE: 3/8" = 1'-0"

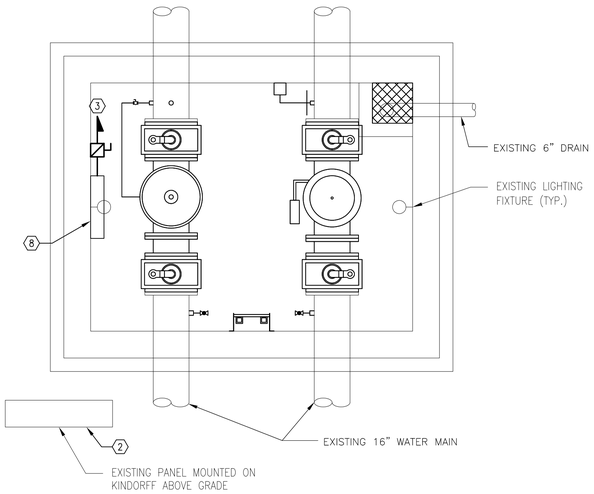

ELEVATED STORAGE TANK VALVE VAULT – NEW WORK PLAN

SCALE: 3/8" = 1'-0"

GENERAL NOTES:

1. WORK SHALL BE DONE IN ACCORDANCE WITH APPROVED SEQUENCE OF CONSTRUCTION TO MINIMIZE IMPACT TO STATION OPERATIONS. SEE PHASING NOTES, SHEET E-2.

SHEET KEYNOTES:

1. DISCONNECT POWER TO EXISTING HEATER. REMOVE ASSOCIATED WIRE BACK TO SOURCE.
2. PROVIDE THE FOLOWING NEW CIRCUIT BREAKERS IN EXISTING PANEL:
   - (1) 1 POLE, 20A CIRCUIT BREAKER FOR LIGHT POLE.
   - (1) 1 POLE, 20A CIRCUIT BREAKER FOR VAULT HEATER.
   - (1) 1 POLE, 20A CIRCUIT BREAKER FOR TANK MIXER.
   - (1) 1 POLE, 20A CIRCUIT BREAKER FOR OVERFLOW SENSOR.

   MATCH AIC RATING OF NEW BREAKERS TO AIC RATING OF PANEL.
3. PROVIDE 2#10 AND 1#10 GND IN EXISTING CONDUIT FROM NEW HEATER TO NEW 20A CIRCUIT BREAKER IN EXISTING PANEL.
4. PROVIDE 2#10 AND 1#10 GND IN 1"C FROM NEW 20A CIRCUIT BREAKER IN EXISTING PANELBOARD.
5. PROVIDE 2#10 AND 1#10 GND IN 1" CONDUIT FROM PAD TO NEW 20A CIRCUIT BREAKER IN EXISTING PANEL.
6. PROVIDE 30A, 2 POLE, NON FUSED DISCONNECT SWITCH IN NEMA 4X ENCLOSURE ADJACENT TO SUBMERSIBLE MIXER. MOUNT DISCONNECT SWITCH ON FREE STANDING SUPPORT
7. PROVIDE 2#10 AND 1#10 GND IN 1" PVC-COATED CONDUIT UP TANK COLUMN LEG AND UP OUTSIDE OF STEEL TANK SHELL TO TANK MIXER.
8. PROVIDE 2 POLE, 30A, 240V, NON-FUSED DISCONNECT SWITCH IN NEMA 4X ENCLOSURE.
9. PROVIDE 2#12 AND 1#12 GND GROUND FROM NEW 20A CIRCUIT BREAKER IN PANELBOARD TO OVERFLOW SENSOR.

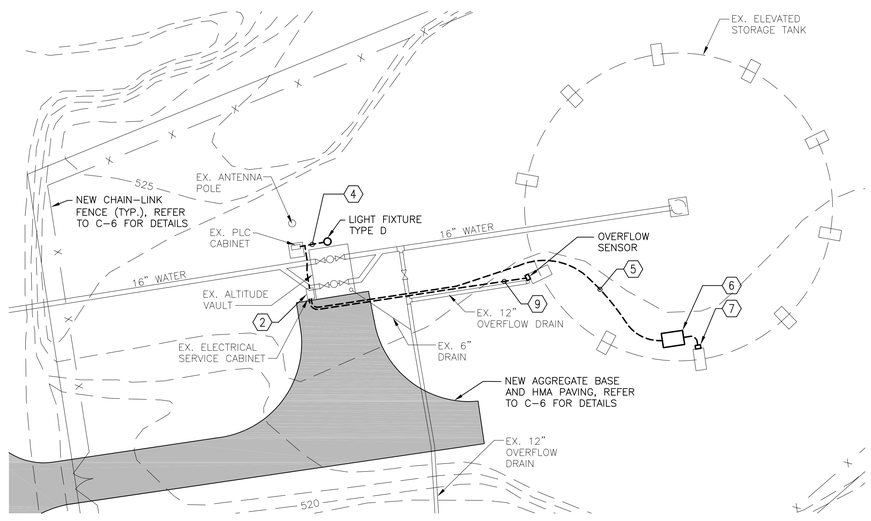

ELEVATED STORAGE TANK – SITE PLAN

SCALE: 1" = 20'-0"

CITY OF BALTIMORE	REVISION – CITY OF BALTIMORE
CHIEF, OFFICE OF ENGINEERING AND CONSTRUCTION DATE	CHIEF, FACILITIES ENGINEERING SECTION DATE

SEAL: STATE OF MARYLAND – SEAN W. LACOMBE – No. 30409 – PROFESSIONAL ENGINEER

DATE: 9/17/2020

PROFESSIONAL CERTIFICATION

I HEREBY CERTIFY THAT THESE DOCUMENTS WERE PREPARED OR APPROVED BY ME, AND THAT I AM A DULY LICENSED PROFESSIONAL ENGINEER UNDER THE LAWS OF THE STATE OF MARYLAND.

LICENSE NO. 30409, EXPIRATION DATE 06/30/2022

ENGINEER: JOHNSON, MIRMIRAN & THOMPSON
40 WIGHT AVENUE
HUNT VALLEY, MD 21030

AS-BUILT PER RECORD PRINT
BY:
DATE:

DESIGN BY: JWL
DRAWN BY: GWK
CHKD BY: JWL

REVISION	BY	DATE
CONTRACT COMPLETION BOX		

P.W.A. NO.	KEY SHEET	POSITION SHT
–	DD-SE	82 NW 5,6
R.O.W NO. –		

DRAWING SCALE	
PLAN SCALE:	AS SHOWN
PROFILE SCALE:	N/A
	N/A

DEPARTMENT OF PUBLIC WORKS: SEE DRAWING 2020-0428 FOR ORIGINAL SIGNATURES

BUREAU OF ENGINEERING AND CONSTRUCTION	HIGHWAYS	STRUCTURES	STORM DRAINS	SEWER	WATER	FIELD ENGINEER	BUR. OF ENGINEERING & CONSTRUCTION
SEE DRAWING 2020-0428 FOR ORIGINAL SIGNATURES							

1' 0 1' 2' 3'
SCALE: 3/8"= 1'-0"

CONTRACT COMPLETION BOX

CONTRACTOR:
DATE COMPLETED:
INSPECTOR:
PIPE MATERIAL (Pressure Only)

DWG. FILENAME:

BALTIMORE COUNTY DEPARTMENT OF PUBLIC WORKS BUREAU OF ENGINEERING & CONSTRUCTION

SPARKS PUMPING STATION

ELEVATED STORAGE TANK VALVE VAULT – ELECTRICAL DEMO. AND NEW WORK PLAN

SPARKS WATER PUMPING STATION AND ELEVATED WATER STORAGE TANK IMPROVEMENTS

SUBDIVISION: SPARKS, MD ELECTION DIST. NO.: 8C3

BALTIMORE COUNTY MARYLAND

SHEET DESIGNATION	CONTRACT NUMBER
E-10	20094WX0
JOB ORDER NUMBER	231-203-0035-0514
SHEET 68 OF 71	
DRAWING NUMBER	2020-0495
FILE NO.:	

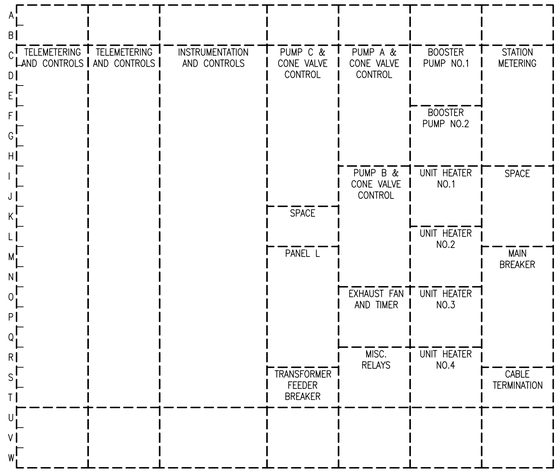

EXISTING MCC ELEVATION – DEMOLITION

SCALE: NOT TO SCALE

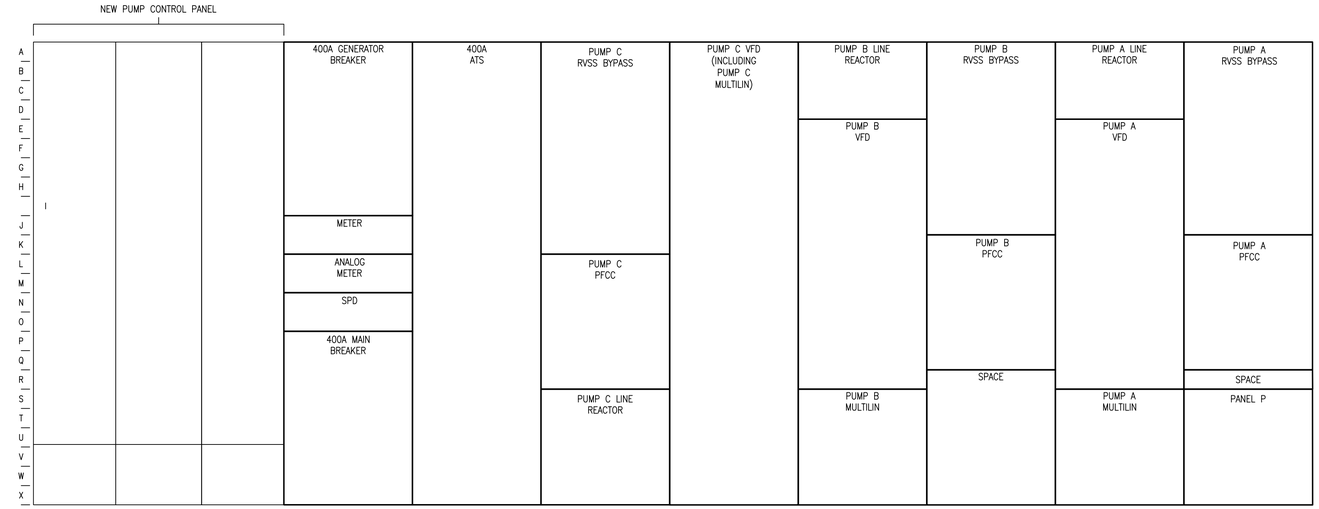

MCC ELEVATION – NEW WORK

SCALE: NOT TO SCALE

GENERAL SHEET NOTES:

1. CONTRACTOR SHALL COORDINATE MCC DEMOLITION WITH THE SUGGESTED SEQUENCE OF DEMOLITION.
2. CONTRACTOR SHALL COORDINATE WITH THE CITY NO LESS THAN 7 DAYS PRIOR TO DEMOLITION ACTIVITIES, FOR CITY TO TAG EQUIPMENT FOR SALVAGE.
3. CONTRACTOR SHALL REMOVE CONDUCTORS AND CONTROL WIRING BELOW SLAB TO NEAREST JUNCTION BOX. CONTRACTOR SHALL CLOSE OFF SLAB TO BE FLUSH WITH FLOOR.
4. WORK SHALL BE DONE IN ACCORDANCE WITH APPROVED SEQUENCE OF CONSTRUCTION TO MINIMIZE IMPACT TO STATION OPERATIONS. SEE PHASING NOTES, SHEET E-2.

SHEET KEYNOTES:

1. EXISTING BGE OUTDOOR METER.
2. 2-2 1/2"C EACH WITH 4#3/0 AND 1#3 GND.
3. #6 GROUNDING ELECTRODE CONDUCTOR TO GROUNDING ELECTRODE.
4. (4)#1/0 AND (1)#6G IN 2" PVC-COATED RIGID STEEL CONDUIT.
5. FUSED DISCONNECT SWITCH.
6. PROVIDE POWER FACTOR CORRECTION CAPACITOR THAT WILL BE IN CIRCUIT WHEN OPERATING IN BYPASS MODE.
7. 4#X250KCMIL AND 1#4GND IN 2 1/2" CONDUIT.

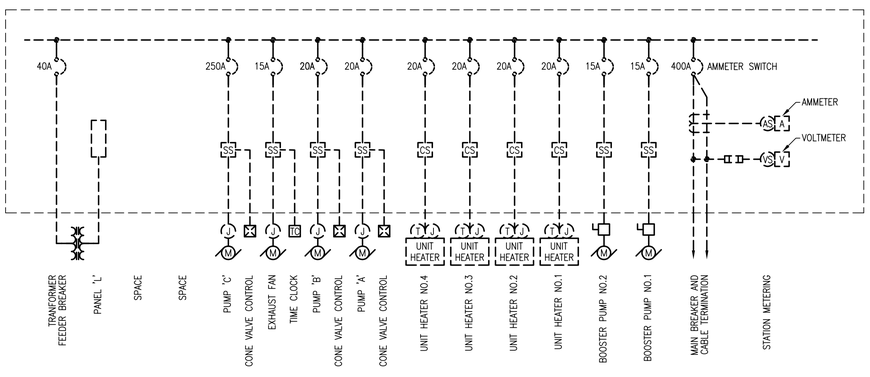

SINGLE LINE DIAGRAM – DEMOLITION

SCALE: NOT TO SCALE

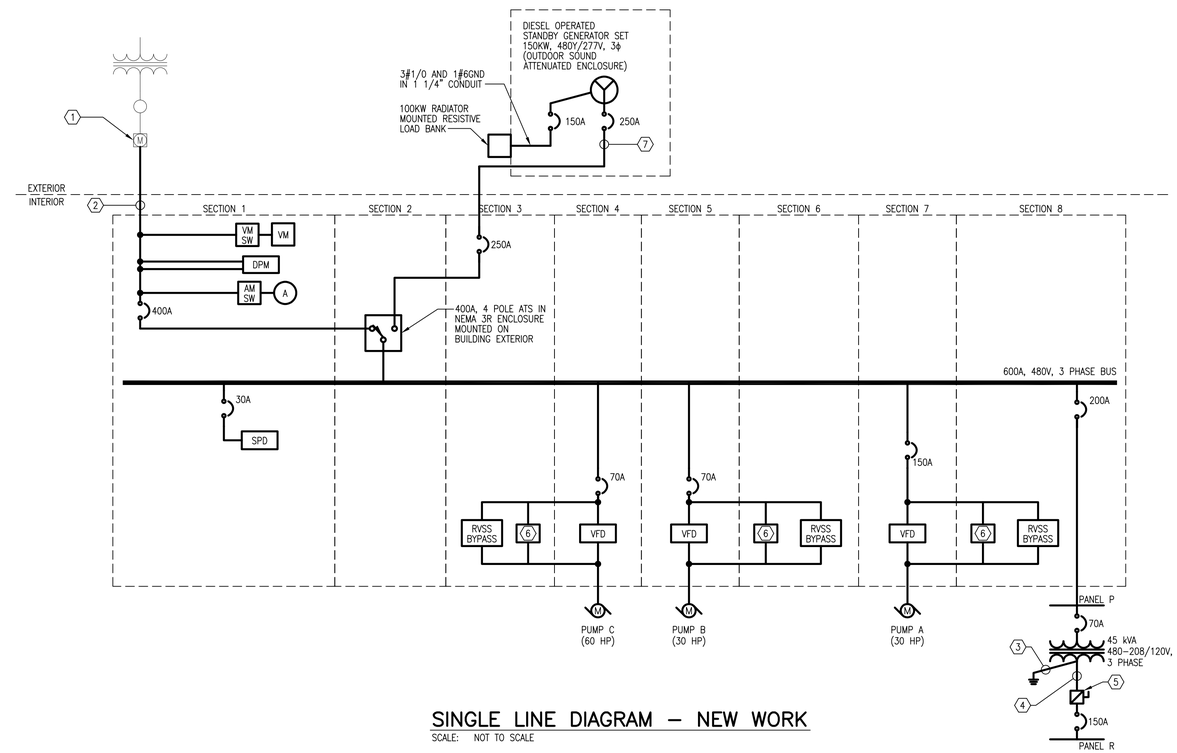

SINGLE LINE DIAGRAM – NEW WORK

SCALE: NOT TO SCALE

CITY OF BALTIMORE	REVISION – CITY OF BALTIMORE
CHIEF, OFFICE OF ENGINEERING AND CONSTRUCTION — DATE	CHIEF, FACILITIES ENGINEERING SECTION — DATE

SEAL: STATE OF MARYLAND — STEPHEN J. LACOMBE — No. 30409 — PROFESSIONAL ENGINEER

DATE: 9/17/2020

PROFESSIONAL CERTIFICATION

I HEREBY CERTIFY THAT THESE DOCUMENTS WERE PREPARED OR APPROVED BY ME, AND THAT I AM A DULY LICENSED PROFESSIONAL ENGINEER UNDER THE LAWS OF THE STATE OF MARYLAND.
LICENSE NO. 30409, EXPIRATION DATE 06/30/2022

ENGINEER: JOHNSON, MIRMIRAN & THOMPSON
40 WIGHT AVENUE
HUNT VALLEY, MD 21030

AS-BUILT PER RECORD PRINT
BY:
DATE:

DESIGN BY: JWL
DRAWN BY: GWK
CHKD BY: JWL

REVISION	BY	DATE
CONTRACT COMPLETION BOX		

P.W.A. NO.	KEY SHEET	POSITION SHT
–	V-NE	77 NW 5,6
R.O.W NO.		
–		

DRAWING SCALE	
PLAN SCALE:	AS SHOWN
	N/A
PROFILE SCALE:	N/A

DEPARTMENT OF PUBLIC WORKS: SEE DRAWING 2020-0428 FOR ORIGINAL SIGNATURES

BUREAU OF ENGINEERING AND CONSTRUCTION	HIGHWAYS	STRUCTURES	STORM DRAINS	SEWER	WATER	FIELD ENGINEER	BUR. OF ENGINEERING & CONSTRUCTION
SEE DRAWING 2020-0428 FOR ORIGINAL SIGNATURES							

BALTIMORE COUNTY DEPARTMENT OF PUBLIC WORKS BUREAU OF ENGINEERING & CONSTRUCTION

SPARKS PUMPING STATION

MCC ELEVATIONS AND SINGLE LINES – DEMOLITION AND NEW WORK

SPARKS WATER PUMPING STATION AND ELEVATED WATER STORAGE TANK IMPROVEMENTS

SUBDIVISION: SPARKS, MD ELECTION DIST. NO.: 8C3

CONTRACT COMPLETION BOX
CONTRACTOR:
DATE COMPLETED:
INSPECTOR:
PIPE MATERIAL (Pressure Only)

DWG. FILENAME:

SHEET DESIGNATION	CONTRACT NUMBER
E-11	20094WXO
JOB ORDER NUMBER	231-203-0035-0514
SHEET 69 OF 71	
DRAWING NUMBER	2020-0496
FILE NO.:	REV. 4/17/17

BALTIMORE COUNTY MARYLAND

PANEL: P

MOUNTING: SURFACE

MAIN: 200 MCB

AMP: 200 VOLT: 277/480
PHASE: 3 4 WIRE + GND
AIC: 10K AMPS RMS SYM

Branch Circuit Load Description	KVA Load A	KVA Load B	KVA Load C	Trip Poles	Circuit Wiring NO	Size	GND	C	Ckt. No.	Phase	Ckt. No.	Circuit Wiring NO	Size	GND	C	Trip Poles	KVA Load A	KVA Load B	KVA Load C	Branch Circuit Load Description
PANEL R	6.22			70/3	3	4	8	1	1	A	2	3	10	10	3/4	25/3	5.82			UNIT HEATER UH-2
-		5.78		-	-	-	-	-	3	B	4	-	-	-	-	-		5.82		-
-			7.70	-	-	-	-	-	5	C	6	-	-	-	-	-			5.82	-
UNIT HEATER UH-3	5.82			25/3	3	10	10	3/4	7	A	8	3	12	12	3/4	20/3	0.60			EXHAUST FAN EF-1
-		5.82		-	-	-	-	-	9	B	10	-	-	-	-	-		0.60		-
-			5.82	-	-	-	-	-	11	C	12	-	-	-	-	-			0.60	-
UNIT HEATER UH-1	4.00			20/1	3	12	12	3/4	13	A	14	2	12	12	3/4	20/1	0.27			LIGHTING - EXTERIOR
UNIT HEATER UH-4		2.50		20/1	3	12	12	3/4	15	B	16	2	12	12	3/4	20/1		1.63		LIGHTING - PUMPS
			0.00						17	C	18	2	12	12	3/4	20/1			0.50	LIGHTING - MCC AND CHLORINE
	0.00								19	A	20						0.00			
		0.00							21	B	22							0.00		
			0.00						23	C	24								0.00	
	0.00								25	A	26						0.00			
		0.00							27	B	28							0.00		
			0.00						29	C	30								0.00	
	0.00								31	A	32						0.00			
		0.00							33	B	34							0.00		
			0.00						35	C	36								0.00	
	0.00								37	A	38						0.00			
		0.00							39	B	40							0.00		
			0.00						41	C	42								0.00	
	16.04	14.10	13.52	<< PHASE SUB-TOTALS >>													6.69	8.05	6.92	MECH EQUIP. CIRCUIT BREAKERS SHALL BE HACR RATED.

PROVIDE THE FOLLOWING:

PHASE A **22.73** kVA
PHASE B **22.15** kVA
PHASE C **20.44** kVA

65.32 kVA TOTAL CONNECTED LOAD

PANEL: R

MOUNTING: SURFACE

MAIN: 150 MCB

AMP: 200 VOLT: 120/208
PHASE: 3 4 WIRE + GND
AIC: 10K AMPS RMS SYM

Branch Circuit Load Description	KVA Load A	KVA Load B	KVA Load C	Trip Poles	Circuit Wiring NO	Size	GND	C	Ckt. No.	Phase	Ckt. No.	Circuit Wiring NO	Size	GND	C	Trip Poles	KVA Load A	KVA Load B	KVA Load C	Branch Circuit Load Description
RECEPTACLES	0.36			20/1	2	12	12	3/4	1	A	2	2	12	12	3/4	20/1	0.54			RECEPTACLES
RECEPTACLES		0.72		20/1	2	12	12	3/4	3	B	4	2	12	12	3/4	20/1		0.54		RECEPTACLES
WATER HEATER			2.05	30/2	2	8	10	3/4	5	C	6	2	12	12	3/4	20/1			0.10	COMPOUND LOOP CONTROLLER
-	2.05			-	-	-	-	-	7	A	8	2	12	12	3/4	20/1	0.50			PUMP A HEATER
NaOCl FEED SYSTEM CONTROL PANEL		0.10		20/1	2	12	12	3/4	9	B	10	2	12	12	3/4	20/1		0.50		PUMP B HEATER
CHART RECORDER (CHLORINE ROOM)			0.10	20/1	2	12	12	3/4	11	C	12	2	12	12	3/4	20/1			0.50	PUMP C HEATER
CHLORINE RESIDUAL ANALYZER	0.10			20/1	2	12	12	3/4	13	A	14					20/1	0.00			SPARE
FLOW METER		0.10		20/1	2	12	12	3/4	15	B	16	2	12	12	3/4	20/1		0.10		RESIDUAL CHLORINE ANALYZER
ALARM PANEL			0.10	20/1	2	12	12	3/4	17	C	18	2	12	12	3/4	20/1			0.10	CHART RECORDER 1
ELEVATED TANK COMMUNICATION PANEL	0.10			20/1	2	12	12	3/4	19	A	20	2	12	12	3/4	20/1	0.10			CHART RECORDER 2
DATALOGGER PANEL		0.10		20/1	2	12	12	3/4	21	B	22	2	12	12	3/4	20/1		0.10		CHART RECORDER 3
ANNUNCIATOR PANEL			0.10	20/1	2	12	12	3/4	23	C	24	2	12	12	3/4	20/2			0.00	EXISTING CIRCUIT *
PERISTALTIC PUMP 1	0.22			20/1	2	12	12	3/4	25	A	26	-	-	-	-	-	0.00			-
PERISTALTIC PUMP 2		0.22		20/1	2	12	12	3/4	27	B	28	2	12	12	3/4	20/1		0.70		EXHAUST FAN EF-2
FILL STATION CONTROL PANEL			0.10	20/1	2	12	12	3/4	29	C	30	2	12	12	3/4	20/1			1.50	UNIT HEATER UH-5
TELEPHONE EQUIPMENT PANEL	0.10			20/1	2	12	12	3/4	31	A	32	2	12	12	3/4	20/1	0.10			PRESSURE TRANSDUCER 1
GEN JACKET HEATER		2.50		30/1	2	10	10	2	33	B	34	2	12	12	3/4	20/1		0.10		PRESSURE TRANSDUCER 2
GEN BATTERY CHARGER			1.00	20/1	2	12	12	2	35	C	36	2	8	19	3/4	20/1			2.05	WATER HEATER
SPARE	0.00			20/1					37	A	38	-	-	-	-	-	2.05			-
SPARE		0.00		20/1					39	B	40					20/1		0.00		SPARE
SPARE			0.00	20/1					41	C	42					20/1			0.00	SPARE
	2.93	3.74	3.45	<< PHASE SUB-TOTALS >>													3.29	2.04	4.25	MECH EQUIP. CIRCUIT BREAKERS SHALL BE HACR RATED.

PROVIDE THE FOLLOWING:

NOTES:

* CONTRACTOR SHALL SURVEY AND VERIFY ALL EXITING CIRCUITS IN PANEL L PRIOR TO REMOVAL. ALL ACTIVE CIRCUITS SHALL BE RESUPPLIED FROM NEW PANEL R. PROVIDE CIRCUIT BREAKER RATING TO MATCH EXISTING CIRCUIT BREAKER. MATCH EXISTING WIRE SIZE.

PHASE A **6.22** kVA
PHASE B **5.78** kVA
PHASE C **7.70** kVA

19.70 kVA TOTAL CONNECTED LOAD

MOTOR CONTROL CENTER: MCC

VOLTAGE: 480Y/277V, 3 PHASE, 4 WIRE | HORIZONTAL BUS: 600A | A.I.C. RATING: 65,000
LOCATION: MOTOR ROOM | VERTICAL BUS: 300A | 400A MCB

CKT NO	DESIGNATION	HP	KVA	CIRCUIT BREAKER P	CIRCUIT BREAKER TRIP	WIRING SETS	WIRING NO	WIRING SIZE	WIRING GND	WIRING C	STARTER SIZE	STARTER TYPE	STARTER AUX	REMARKS	CONN KVA
1A	GENERATOR CIRCUIT BREAKER			3	250	1	4	250KCMIL	4	2 1/2					
1I	POWER METER														
1K	ANALOG METER														
1M	SPD			3	30	1	4	10	10	3/4					0.10
1O	MAIN CIRCUIT BREAKER			3	400	2	4	3/0	3	2 1/2				MAIN CIRCUIT BREAKER	
2A	400A ATS														
3A	PUMP C RVSS	60		3	70						60	RVSS	A,B,C,D,E,F,G,H	(1)	
3L	PUMP C PFCC														
3S	PUMP C LINE REACTOR														
4A	PUMP C VFD	60		3	150	1	3	3	8	1 1/4	60	VFD	A,B,C,D,E,F,G,H	(3)	64.00
5A	PUMP B LINE RACTOR														
5D	PUMP B VFD	30		3	70	1	3	6	8	3/4	40	VFD	A,B,C,D,E,F,G,H	(3)	33.00
5R	PUMP B MULTILIN														
6A	PUMP B RVSS	30		3	70						40	RVSS	A,B,C,D,E,F,G,H	(1)	
6K	PUMP B PFCC														
7A	PUMP A LINE REACTOR														
7D	PUMP A VFD	30		3	70	1	3	6	8	3/4	40	VFD	A,B,C,D,E,F,G,H	(3)	33.00
7R	PUMP A MULTILIN														
8A	PUMP A RVSS	30		3	70						40	RVSS	A,B,C,D,E,F,G,H	(1)	
8K	PUMP A PFCC														
8S	PANEL P			3	200	1	4	3/0	6	2					65.32

MOTOR STARTER AUXILIARY DEVICES

A LOCAL-OFF-REMOTE SELECTOR SWITCH
B PUMP START AND PUMP STOP PUSH BUTTONS
C PUSH-TO-TEST INDICATING LIGHTS FOR PUMP RUNNING, PUMP OFF, DISCHARGE CONE VALVE OPENED, DISCHARGE CONE VALVE CLOSED, PUMP LOCKOUT, 4-WAY OPEN SOLENOID ENERGIZED
D RESET BUTTON
E MULTILIN ACCESS SWITCH
F E-STOP

(1) INITIAL RVSS SETTING, 300% CURRENT LIMIT FOR 10 SECOND STARTING DURATION.
(2) 3 POLE ATS WITH DELAYED TRANSITION FROM NORMAL TO EMERGENCY POWER
(3) PROVIDE CONDUIT AND WIRE AS REQUIRED FOR CONNECTION TO MANUFACTURER SUPPLIED PUMP POWER CABLE

TOTAL CONNECTED LOAD IN KVA: 195.42

CONTRACT COMPLETION BOX
CONTRACTOR: ____
DATE COMPLETED: ____
INSPECTOR: ____
PIPE MATERIAL (Pressure Only) ____

DWG. FILENAME:

CITY OF BALTIMORE
CHIEF, OFFICE OF ENGINEERING AND CONSTRUCTION — DATE

REVISION – CITY OF BALTIMORE
CHIEF, FACILITIES ENGINEERING SECTION — DATE

SEAL: STATE OF MARYLAND — JOSEPH W. LACOVARA, JR — No. 30409 — PROFESSIONAL ENGINEER
DATE: 9/17/2020

PROFESSIONAL CERTIFICATION
I HEREBY CERTIFY THAT THESE DOCUMENTS WERE PREPARED OR APPROVED BY ME, AND THAT I AM A DULY LICENSED PROFESSIONAL ENGINEER UNDER THE LAWS OF THE STATE OF MARYLAND.
LICENSE NO. 30409, EXPIRATION DATE 06/30/2022.

ENGINEER: JOHNSON, MIRMIRAN & THOMPSON
40 WIGHT AVENUE
HUNT VALLEY, MD 21030
AS-BUILT PER RECORD PRINT
BY:
DATE:

DESIGN BY: JWL
DRAWN BY: GWK
CHKD BY: JWL

REVISION | BY | DATE
CONTRACT COMPLETION BOX

P.W.A. NO.: –
R.O.W NO.: –
KEY SHEET: V-NE DD-SE
POSITION SHT: 77 NW 5,6; 82 NW 5,6

DRAWING SCALE
PLAN SCALE: AS SHOWN
PROFILE SCALE: N/A N/A

DEPARTMENT OF PUBLIC WORKS
SEE DRAWING 2020-0428 FOR ORIGINAL SIGNATURES

BUREAU OF ENGINEERING AND CONSTRUCTION | HIGHWAYS | STRUCTURES | STORM DRAINS | SEWER | WATER | FIELD ENGINEER | BUR. OF ENGINEERING & CONSTRUCTION

SEE DRAWING 2020-0428 FOR ORIGINAL SIGNATURES

BALTIMORE COUNTY DEPARTMENT OF PUBLIC WORKS BUREAU OF ENGINEERING & CONSTRUCTION
SPARKS PUMPING STATION
ELECTRICAL MCC AND PANEL SCHEDULES
SPARKS WATER PUMPING STATION AND ELEVATED WATER STORAGE TANK IMPROVEMENTS
SUBDIVISION: SPARKS, MD ELECTION DIST. NO.: 8C3

SHEET DESIGNATION: E-12
CONTRACT NUMBER: 20094WXO
JOB ORDER NUMBER: 231-203-0035-0514
SHEET 70 OF 71
DRAWING NUMBER: 2020-0497
FILE NO.:
REV. 01/17

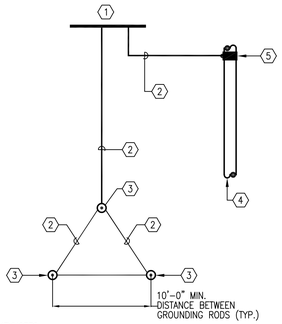

DETAIL KEYNOTES

1. MCC GROUND BUS.
2. #2 BARE CU. GROUND CONDUCTOR
3. 3/4" X 10'-0" LONG COPPER CLAD STEEL GROUND ROD DRIVEN WITH TOP MINIMUM 30" BELOW GRADE. EXOTHERMIC-WELD CONNECTORS TO GROUND ROD
4. METALLIC WATER PIPE.
5. GROUNDING CLAMP ON METALLIC PIPE.

DETAIL NOTE

1. SUBMIT PLAN FOR GROUND ROD LOCATIONS PRIOR TO INSTALLATION FOR APPROVAL.

1 / E-13 ELECTRIC SERVICE GROUNDING ELECTRODE
SCALE: NONE

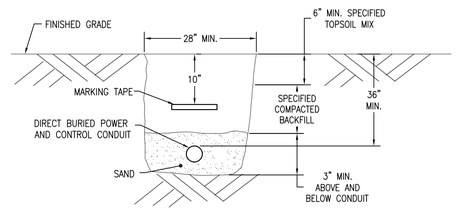

2 / E-13 DIRECT BURIED CONDUIT DETAIL
SCALE: NONE

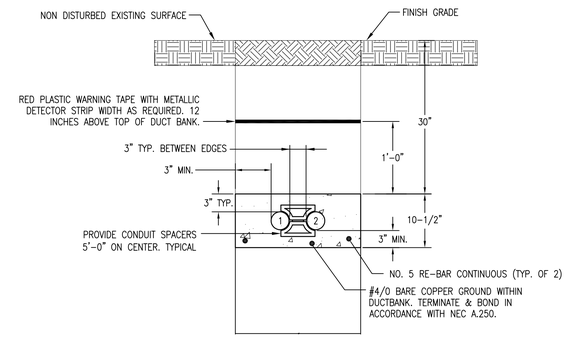

3 / E-13 CONCRETE ENCASED DUCTBANK DETAIL
SCALE: NOT TO SCALE

CITY OF BALTIMORE	REVISION – CITY OF BALTIMORE
CHIEF, OFFICE OF ENGINEERING AND CONSTRUCTION DATE	CHIEF, FACILITIES ENGINEERING SECTION DATE

SEAL: STATE OF MARYLAND — JOSEPH W. LACOMBE, JR. — No. 30409 — PROFESSIONAL ENGINEER

DATE: 9/17/2020

PROFESSIONAL CERTIFICATION

I HEREBY CERTIFY THAT THESE DOCUMENTS WERE PREPARED OR APPROVED BY ME, AND THAT I AM A DULY LICENSED PROFESSIONAL ENGINEER UNDER THE LAWS OF THE STATE OF MARYLAND.

LICENSE NO. 30409, EXPIRATION DATE 06/30/2022

ENGINEER: JOHNSON, MIRMIRAN & THOMPSON
40 WIGHT AVENUE
HUNT VALLEY, MD 21030

AS-BUILT PER RECORD PRINT

BY:
DATE:

DESIGN BY: JWL
DRAWN BY: GWK
CHKD BY: JWL

REVISION	BY	DATE
CONTRACT COMPLETION BOX		

P.W.A. NO.	KEY SHEET	POSITION SHT
–	V-NE DD-SE	77 NW 5,6 82 NW 5,6
R.O.W NO.		
–		

DRAWING SCALE
PLAN SCALE: AS SHOWN
PROFILE SCALE: N/A N/A

DEPARTMENT OF PUBLIC WORKS
SEE DRAWING 2020-0428 FOR ORIGINAL SIGNATURES

BUREAU OF ENGINEERING AND CONSTRUCTION | HIGHWAYS | STRUCTURES | STORM DRAINS | SEWER | WATER | FIELD ENGINEER | BUR. OF ENGINEERING & CONSTRUCTION

SEE DRAWING 2020-0428 FOR ORIGINAL SIGNATURES

CONTRACT COMPLETION BOX
CONTRACTOR:
DATE COMPLETED:
INSPECTOR:
PIPE MATERIAL (Pressure Only)

DWG. FILENAME:

BALTIMORE COUNTY DEPARTMENT OF PUBLIC WORKS BUREAU OF ENGINEERING & CONSTRUCTION

SPARKS PUMPING STATION

ELECTRICAL DETAILS

SPARKS WATER PUMPING STATION AND ELEVATED WATER STORAGE TANK IMPROVEMENTS

SUBDIVISION: SPARKS, MD ELECTION DIST. NO.: 8C3

SHEET DESIGNATION	CONTRACT NUMBER
E-13	20094WXO
	JOB ORDER NUMBER
	231-203-0035-0514
	SHEET 71 OF 71
	DRAWING NUMBER
	2020-0498
	FILE NO.: